ROMTEC
18240 NORTH BANK ROAD - ROSEBURG, OR 97470
(541)-496-3541 FAX (541)-496-0803

PROJECT INFORMATION

PROJECT NAME	DIAMOND HILL PARK
PROJECT I.D.	DHP01
MODEL #	1015
SITE ADDRESS	-
CITY / STATE	CUMBERLAND, RHODE ISLAND

REVISION SCHEDULE

REV.	DATE	BY	DESCRIPTION
3	8/24/2020	TY	A1.1, A1.2, A4.1, A4.2, S7.1, S7.3, S8.1, S9.1, P2, E2
2	7/27/2020	TY	A1.3, A2.1, A2.4, A4.1, A4.3, A5.1, A5.2, A6.2, A6.4, S7.1, S7.3, S8.1, S9.1, S10.2, E1, E2
1	7/09/2020	JRM	G0, G1, G2, S7.1, S7.2, S7.3, S8.1, S8.2, S8.3, S8.4, S8.5

SHEET SCHEDULE

SHEET	CONTENTS
G0	TITLE SHEET,SHEET SCHEDULE,REVISION & REVISION SCHEDULE
G1	GENERAL NOTES / SYMBOL LEGEND
G2	DESIGN CRITERIA AND CODE SUMMARY
A1.1	FLOOR PLAN
A1.2	ADA CLEARANCES
A1.3	INTERIOR ELEVATIONS
A2.1	EXTERIOR ELEVATIONS
A2.2	EXTERIOR ELEVATIONS
A2.3	EXTERIOR ELEVATIONS
A2.4	EXTERIOR ELEVATIONS
A3.1	SECTION VIEWS
A4.1	WALL FINISH SCHEDULE (INTERIOR/EXTERIOR)
A4.2	WALL FINISH DETAILS
A4.3	WALL FINISH DETAILS
A5.1	DOOR SCHEDULE
A5.2	DOOR DETAILS - SIDING & INTERIOR FINISH
A6.1	WINDOW SCHEDULE
A6.2	WINDOW DETAILS
A6.3	FILLER WALL SCHEDULE
A6.4	FILLER WALL DETAILS
S7.1	FOUNDATION PLAN
S7.2	FOUNDATION DETAILS
S7.3	FOUNDATION DETAILS
S7.4	VAULT DETAILS
S8.1	STRUCTURAL CMU PLAN
S8.2	STRUCTURAL DETAILS
S8.3	STRUCTURAL DETAILS
S8.4	STRUCTURAL ELEVATIONS
S8.5	STRUCTURAL ELEVATIONS
S9.1	ROOF FRAMING PLAN
S10.1	ROOF CONNECTION DETAILS
S10.2	ROOF CONNECTION DETAILS
S10.3	ROOF CONNECTION DETAILS
S10.4	ROOF CONNECTION DETAILS
S10.5	ROOF CONNECTION DETAILS
S10.6	ROOF CONNECTION DETAILS
S10.7	SKYLIGHT
P1	PLUMBING SCHEDULE
P2	PLUMBING PLAN
E1	ELECTRICAL SCHEDULE
E2	ELECTRICAL PLAN
E3	ELECTRICAL RISER DETAILS

08/24/2020
CERTIFIED MASTER KITCHEN & BATH DESIGNER
CMKBD
Cassandra Ruport
ID #1063772
NKBA
Cassandra Ruport
EXPIRES: 01/01/2021

Structural members only were included in this structural review/design by PSE. Non-structural items are NOT included.

© 2020 ROMTEC, INC. ALL RIGHTS RESERVED. THESE PLANS AND DRAWINGS MAY NOT BE REPRODUCED, ADAPTED OR FURTHER DISTRIBUTED, AND NO BUILDINGS MAY BE CONSTRUCTED FROM THESE PLANS, WITHOUT THE WRITTEN PERMISSION OF ROMTEC, INC.

PSE Consulting Engineers, Inc.
www.structure1.com
Klamath Falls Office
250 Main Klamath Falls, Oregon 97603
Phone: (541) 850-6300 Fax: (541) 850-6233
info@structure1.com
ROMTEC 220-57

ROMTEC
18240 NORTH BANK ROAD
ROSEBURG, OR 97470
(541)-496-3541 FAX (541)-496-0803

PROJECT: 1015 ASPEN
DIAMOND HILL PARK
CUMBERLAND, RHODE ISLAND

SHEET TITLE: TITLE SHEET,SHEET SCHEDULE, REVISION & REVISION SCHEDULE

PLAN SET#
DHP01

DATE:
07/02/2020

REVISIONS

REV.	DATE:	BY
1	7/09/2020	JRM

DRAWN BY: TY

SHEET NO.
G0

8-25-2020

NABIL TAHA
No. 11188
REGISTERED PROFESSIONAL ENGINEER CIVIL & STRUCTURAL
Ex 6-30-21

SYMBOL LEGEND

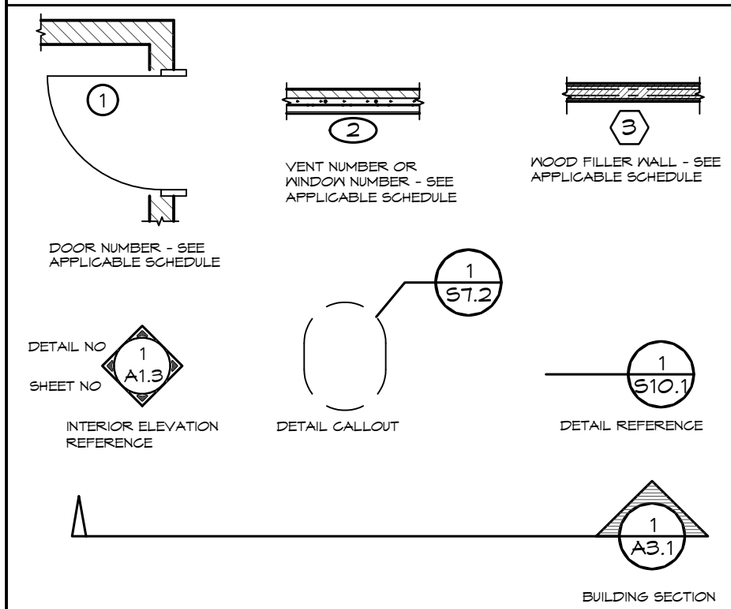

ABBREVIATIONS

AB	ANCHOR BOLT	ND	NAPKIN DISPOSAL
AFF	ABOVE FINISHED FLOOR	NTS	NOT TO SCALE
ATS	AUTOMATIC TRANSFER SWITCH	OC	ON CENTER
BN	BOUNDARY NAIL	OCEW	ON CENTER EACH WAY
BOT	BOTTOM	OSB	ORIENTED STRAND BOARD
BP	BREAKER PANEL	P	PHOTO EYE
CJ	CONTROL JOINT	PCC	PORTLAND CEMENT COMPANY
CL	CENTER LINE	PEN	PANEL EDGE NAILING
CO	CLEAN OUT	PL	PLATE
CMU	CONCRETE MASONRY UNIT	PSF	POUNDS PER SQUARE FOOT
db	NOMINAL BAR DIAMETER	PSI	POUNDS PER SQUARE INCH
DD	DIAPER DECK	PT	PRESSURE TREATED
DIA	DIAMETER	PTD	PAPER TOWEL DISPENSER
DISC	DISCONNECT	PV	PHOTO VOLTAIC
EM	ELECTRIC METER	R4S	ROUGH FOUR SIDES
EN	END NAIL	REQD	REQUIRED
EW	EACH WAY	RO	ROUGH OPENING
FD	FLOOR DRAIN	S4S	SURFACED FOUR SIDES
FF	FINISHED FLOOR	SCH	SCHEDULE
FG	FINISHED GRADE	SD	SOAP DISPENSER
FN	FIELD NAIL	SIP	STRUCTURAL INSULATED PANEL
FRP	FIBERGLASS REINFORCED PANEL	SJ	SAW JOINT
GB	GRAB BAR	SM	SHEET METAL
GLB	GLUE LAMINATED BEAM	SN	SHEAR NAILING
HB	HOSE BIBB	SS	STAINLESS STEEL
HD	HAND DRYER	SST	STRUCTURAL STEEL TUBE
HM	HOLLOW METAL (DOOR)	TBD	TO BE DETERMINED
HTR	HEATER	T&B	TOP & BOTTOM
HYP	HYPOTENUSE	T&G	TONGUE & GROOVE
I.S.	INSTALLER SUPPLIED	TLT	TOILET
KSI	KIPS PER SQUARE INCH	TP	TOILET PAPER DISPENSER
L	STRUCTURAL STEEL ANGLE	TS	TIMER SWITCH
LAV	LAVATORY	TSCD	TOILET SEAT COVER DISPENSER
LF	LIGHT FIXTURE	TYP	TYPICAL
MBP	MAIN BREAKER PANEL	UNO	UNLESS NOTED OTHERWISE
MD	MAIN DISCONNECT	VB	VAPOR BARRIER
MIN	MINIMUM	VTR	VENT THROUGH ROOF
MIR	MIRROR	WH	WATER HEATER
MO	MASONRY OPENING	WWM	WOVEN WIRE MESH
MR	METAL ROOFING	W/	WITH
MS	MILD STEEL		

GENERAL NOTES

1. THIS PROJECT SHALL COMPLY WITH ALL CODES AND STANDARDS IDENTIFIED ON SHEET G2. ALL WORK SHALL MEET OR EXCEED INDUSTRY STANDARDS FOR MATERIALS, WORKMANSHIP, ETC.

2. CONTRACTOR SHALL REVIEW THE DRAWINGS THOROUGHLY BEFORE PROCEEDING WITH ANY WORK. ANY DISCREPANCIES FOUND WITHIN THESE DOCUMENTS SHALL BE BROUGHT TO THE IMMEDIATE ATTENTION OF ROMTEC. CONTRACTOR SHALL NOT PROCEED WITH ANY WORK HE KNOWS TO BE IN CONFLICT WITH OTHER WORK, OR IS NOT APPROVED BY CODE, UNTIL RESOLVED BY ROMTEC OR THE ENGINEER/ARCHITECT.

3. CONTRACTOR SHALL MAINTAIN GENERAL LIABILITY INSURANCE AND WORKER'S COMP. INSURANCE AS PER SPECIFIC STATE MINIMUM REQUIREMENTS.

4. FOOTINGS SHALL BE CONSTRUCTED ON UNDISTURBED NATIVE SOIL OR ENGINEER APPROVED FILL. CONTRACTOR TO VERIFY ASSUMED SOIL BEARING CAPACITY NOTED ON SHEET G2. SHOULD SOIL NOT MEET OR EXCEED THE ASSUMED SOIL BEARING CAPACITY, CONTRACTOR TO MODIFY SOIL CONDITIONS TO SATISFY CRITERIA OR NOTIFY THE STRUCTURAL ENGINEER TO REVISE DESIGN PER CONDITIONS ENCOUNTERED. BACKFILL AROUND BUILDING TO PROVIDE SLOPE AWAY FROM BUILDING NOT LESS THAN A 2% SLOPE FOR A MINIMUM DISTANCE OF 10' FROM THE BUILDING, PER 2015 IBC 1804.3.

5. CAST-IN-PLACE CONCRETE: 3000 PSI MINIMUM COMPRESSIVE STRENGTH AT 28 DAYS 4" +/- 1" SLUMP, WITH MAX 1" AGGREGATE, AND ALL MATERIALS IN ACCORDANCE WITH ACI 318 STANDARDS. FINE BROOM FINISH INTERIOR SURFACES AND EXTERIOR SLABS. JOINTS REQUIRED IN FLAT WORK, SEE FOUNDATION DETAILS FOR REQUIREMENTS.
CMU BLOCKS "MEDIUM WEIGHT DENSITY" ARE MANUFACTURED TO ASTMC90-02 STANDARDS WITH A MIN COMPRESSIVE STRENGTH Fm = 1500 PSI. ALL CMU BLOCKS MUST BE FULLY GROUTED IN 5 FT MAXIMUM LIFTS AND NOT BE WETTED. THE MORTAR TO BE USED SHALL BE TYPE S 1800 PSI MORTAR CONFORMING TO ASTM C270.
MASONRY (CONCRETE) GROUT: 2500 PSI MINIMUM COMPRESSIVE STRENGTH AT 28 DAYS 9" +/- 1" SLUMP, WITH MAX 1/2" AGGREGATE, AND TESTED IN ACCORDANCE TO MEET ACI 318. FINE OR COURSE GROUT MAY BE USED IN ACCORDANCE WITH 2015 IBC.

6. ANCHOR AND MACHINE BOLTS SHALL BE ASTM A307, UNLESS NOTED OTHERWISE BOLTS SHALL BE INSTALLED PER TURN-OF-NUT INSTALLATION METHOD REQUIRED TURNS FOR PRE-TENSIONING FROM SNUG-TIGHT, U.N.O. IN THIS PLANSET OR BY ANCHOR, BOLT OR FASTENER MANUFACTURER. SCREWS AND MACHINE BOLT CALLOUTS ARE MINIMUM SIZE ALLOWED, ACTUAL SIZE MAY VARY. TS STEEL BEAMS SHALL BE ASTM A500 GRADE B, Fy = 46 ksi. WIDE FLANGE BEAMS SHALL BE ASTM A992, Fy = 50 ksi. STEEL PLATES & SHAPES SHALL BE ASTM A36, Fy = 36 ksi. CONCRETE REINFORCING STEEL (REBAR): 60 ksi. (GRADE 60). WOOD FRAMING SHALL BE #2 & BTR DOUGLAS FIR, UNO.
GLU-LAM BEAMS SHALL BE GRADE 24F-V4.

7. QUESTIONS CONCERNING MATERIALS OR CONSTRUCTION CONTACT ROMTEC TECHNICAL ASSISTANCE AT: 541-496-3541

8. ROMTEC SCOPE SUPPLY AND DESIGN SUBMITTAL (SSDS) IDENTIFY SPECIFIC MODEL, MANUFACTURER & BRAND OF ALL PLUMBING AND ELECTRICAL FIXTURES AND ACCESSORIES. REFER TO THE SSDS FOR SPECIFIC LIST OF ITEMS SUPPLIED BY ROMTEC, ANY ITEMS NOT LISTED IN THE SSDS IS ASSUMED SUPPLIED BY THE INSTALLER.

9. THE OWNER / CONTRACTOR MAY EXERCISE DISCRETION IN SELECTING THE FINAL LOCATION FOR NON-DIMENSIONED ACCESSORIES AND FIXTURES (E.G., LIGHTS, COMFORT HEATERS, ETC.)

NOTE: ARCHITECT/ENGINEER IS NOT RESPONSIBLE FOR ANY SITE DESIGN OR ENGINEERING AND WILL NOT BE HELD ACCOUNTABLE OR LIABLE FOR ANY ISSUES RELATED TO THIS SITE. IT IS THE OWNER'S RESPONSIBILITY TO ACCURATELY LOCATE THIS BUILDING, SET FLOOR AND ADJACENT ELEVATIONS, DETERMINE SITE IS SUITABLE FOR CONSTRUCTION, VERIFY ALL UTILITIES, ETC.

RECYCLE

RECYCLE ALL USED SHIPPING MATERIALS AND LEFT OVER BUILDING MATERIALS

Structural members only were included in this structural review/design by PSE. Non-structural items are NOT included.

© 2020 ROMTEC, INC. ALL RIGHTS RESERVED. THESE PLANS AND DRAWINGS MAY NOT BE REPRODUCED, ADAPTED OR FURTHER DISTRIBUTED, AND NO BUILDINGS MAY BE CONSTRUCTED FROM THESE PLANS, WITHOUT THE WRITTEN PERMISSION OF ROMTEC, INC.

PSE Consulting Engineers, Inc.
www.structure1.com
Klamath Falls Office
250 Main Klamath Falls, Oregon 97603
Phone: (541) 850-6300 Fax: (541) 850-6233
info@structure1.com
ROMTEC 220-57

ROMTEC
18240 NORTH BANK ROAD
ROSEBURG, OR 97470
(541)-496-3541 FAX (541)-496-0803

PROJECT: 1015 ASPEN
DIAMOND HILL PARK
CUMBERLAND, RHODE ISLAND

SHEET TITLE: GENERAL NOTES / SYMBOL LEGEND

PLAN SET# DHP01
DATE: 07/02/2020

REVISIONS

REV.	DATE:	BY
1	7/09/2020	JRM

DRAWN BY: TY

SHEET NO. G1

CODES AND STANDARDS

RHODE ISLAND STATE BUILDING CODE (2015 IBC)
RHODE ISLAND STATE PLUMBING CODE (2015 IPC)
RHODE ISLAND STATE MECHANICAL CODE (2015 IMC)
RHODE ISLAND STATE ELECTRICAL CODE (2014 NEC)
RHODE ISLAND STATE UNIFORM FIRE CODE (NFPA 1, 2003)
RHODE ISLAND STATE BUILDING CODE (UFAS, ANSI A117.1)
RHODE ISLAND STATE ENERGY CODE (2012 IECC)

ACI AMERICAN CONCRETE INSTITUTE, ACI 318, "BUILDING CODE REQUIREMENTS FOR STRUCTURAL CONCRETE"

TMS THE MASONRY SOCIETY, TMS 402, "BUILDING CODE REQUIREMENTS FOR MASONRY STRUCTURES"

CODE SUMMARY:

OCCUPANCY TYPE: U
CONSTRUCTION: VB
AREA: 388 SQ FT
AREA ALLOWABLE: 5500 SQ FT
HEIGHT: ...1 STORY
HEIGHT ALLOWABLE: 1 STORY
OCCUPANT LOAD: 7

DESIGN LOADS

ROOF: SNOW LOAD	30 PSF
ROOF: DEAD LOAD	10 PSF
WALL DEAD LOAD	81 PSF
IBC SEISMIC DESIGN CATEGORY	B
DESIGN WIND SPEED (ULTIMATE)	131 MPH EXPOSURE C
ALLOWABLE SOIL BEARING	1500 PSF

SEISMIC DESIGN DATA:

RISK CATEGORY:	II
IMPORTANCE FACTOR:	1.0
SS:	0.179
S1:	0.063
SITE CLASS:	D
SMS:	0.287
SM1:	0.152
SDS:	0.191
SD1:	0.101
SEISMIC DESIGN CATEGORY:	B
R =	5
BASE SHEAR: V =	0.038 W

WIND DESIGN :

RISK CATEGORY:	II
WIND SPEED =	131 MPH
EXPOSURE:	C
INTERNAL PRESSURE COEFE =	± 0.18

BEARING WALL SYSTEM: SPECIAL REINFORCED MASONRY SHEAR WALL

ANALYSIS METHOD: EQUIVALENT STATIC FORCE METHOD

SPECIAL INSPECTIONS

CONCRETE SPECIAL INSPECTION NOT REQUIRED PER IBC 1705.3
EXCEPTION 2.3 [FOOTINGS]
EXCEPTION 3 [SLAB]

SPECIAL INSPECTIONS, CONT'D

MASONRY CONSTRUCTION: LEVEL B QUALITY ASSURANCE (PER TABLE 1.19.2 IN TMS402/11)

INSPECTION TASK	FREQUENCY OF INSPECTION		REFERENCE CRITERIA		INSPECTION LOCATION	
	CONTINUOUS	PERIODIC	TMS 402 / ACI 530 / ASCE5	TMS 602 / ACI 530.1 / ASCE6	INHOUSE	FIELD
1. VERIFY COMPLIANCE WITH THE APPROVED SUBMITTALS	-	X	-	ART. 1.5	-	X
2. AS MASONRY CONSTRUCTION BEGINS, VERIFY THAT THE FOLLOWING ARE IN COMPLIANCE:						
A. PROPORTION OF SITE-PREPARED MORTAR	-	X	-	ART. 2.1, 2.6A	-	X
B. CONSTRUCTION OF MORTAR JOINTS	-	X	-	ART. 3.3 B	-	X
D. LOCATION OF REINFORCEMENT, CONNECTORS, AND PRESTRESSING TENDONS AND ANCHORAGES	-	X	-	ART. 3.4/ 3.6A	-	X
3. PRIOR TO GROUTING, VERIFY THAT THE FOLLOWING ARE IN COMPLIANCE:						
A. GROUT SPACE	-	X	-	ART. 3.2D, 3.2 F	-	X
B. GRADE, TYPE, AND SIZE OF REINFORCEMENT AND ANCHOR BOLTS, AND PRESTRESSING TENDONS AND ANCHORAGES	-	X	SEC. 1.16	ART. 2.4, 3.4	-	X
C. PLACEMENT OF REINFORCEMENT, CONNECTORS AND PRESTRESSING TENDONS AND ANCHORAGES	-	X	SEC. 1.16	ART. 3.2E, 3.4, 3.6A	-	X
D. PROPORTIONS OF SITE-PREPARED GROUT AND PRESTRESSING GROUT FOR BONDED TENDONS	-	X	-	ART. 2.6B, 2.4G.1.b	-	X
E. CONSTRUCTION OF MORTAR JOINTS	-	X	-	ART. 3.3B	-	X
4. VERIFY DURING CONSTRUCTION:						
A. SIZE AND LOCATION OF STRUCTURAL ELEMENTS	-	X		ART. 3.3F	-	X
B. TYPE, SIZE AND LOCATION OF ANCHORS, INCLUDING OTHER DETAILS OF ANCHORAGE OF MASONRY TO STRUCTURAL MEMBERS, FRAMES OR OTHER CONSTRUCTION.	-	X	SEC. 1.16.4.3, 1.17.1	-	-	X
D. PREPARATION, CONSTRUCTION, AND PROTECTION OF MASONRY DURING COLD WEATHER (TEMPERATURE BELOW 40°F(4.4°C)) OR HOT WEATHER (TEMPERATURE ABOVE 90°F(32.2°C))	-	X	-	ART. 1.8C, 1.8D	-	X
5. OBSERVE PREPARATION OF GROUT SPECIMENS, MORTAR SPECIMENS, AND/OR PRISMS	-	X	-	ART. 1.4B.2.a.3, 1.4B.2.b.3, 1.4B.2.c.3, 1.4B.3,1.4B.4	-	X

8-25-2020

NABIL TAHA
No. 11188
REGISTERED PROFESSIONAL ENGINEER
CIVIL & STRUCTURAL
Ex 6-30-21

Structural members only were included in this structural review/design by PSE. Non-structural items are NOT included.

© 2020 ROMTEC, INC. ALL RIGHTS RESERVED. THESE PLANS AND DRAWINGS MAY NOT BE REPRODUCED, ADAPTED OR FURTHER DISTRIBUTED, AND NO BUILDINGS MAY BE CONSTRUCTED FROM THESE PLANS, WITHOUT THE WRITTEN PERMISSION OF ROMTEC, INC.

PSE Consulting Engineers, Inc.
www.structure1.com
Klamath Falls Office
250 Main Klamath Falls, Oregon 97603
Phone: (541) 850-6300 Fax: (541) 850-6233
info@structure1.com
ROMTEC 220-57

ROMTEC
18240 NORTH BANK ROAD
ROSEBURG, OR 97470
(541)-496-3541 FAX (541)-496-0803

PROJECT: 1015 ASPEN
DIAMOND HILL PARK
CUMBERLAND, RHODE ISLAND

SHEET TITLE: DESIGN CRITERIA AND CODE SUMMARY

PLAN SET# DHP01
DATE: 07/02/2020

REVISIONS

REV.	DATE:	BY
1	7/09/2020	JRM

DRAWN BY: TY

SHEET NO. G2

WALL TYPE SCHEDULE

8" REINFORCED CONCRETE MASONRY BLOCK WALL WITH MORTAR JOINTS, GROUTED SOLID ALL CELLS RUNNING BOND PATTERN.

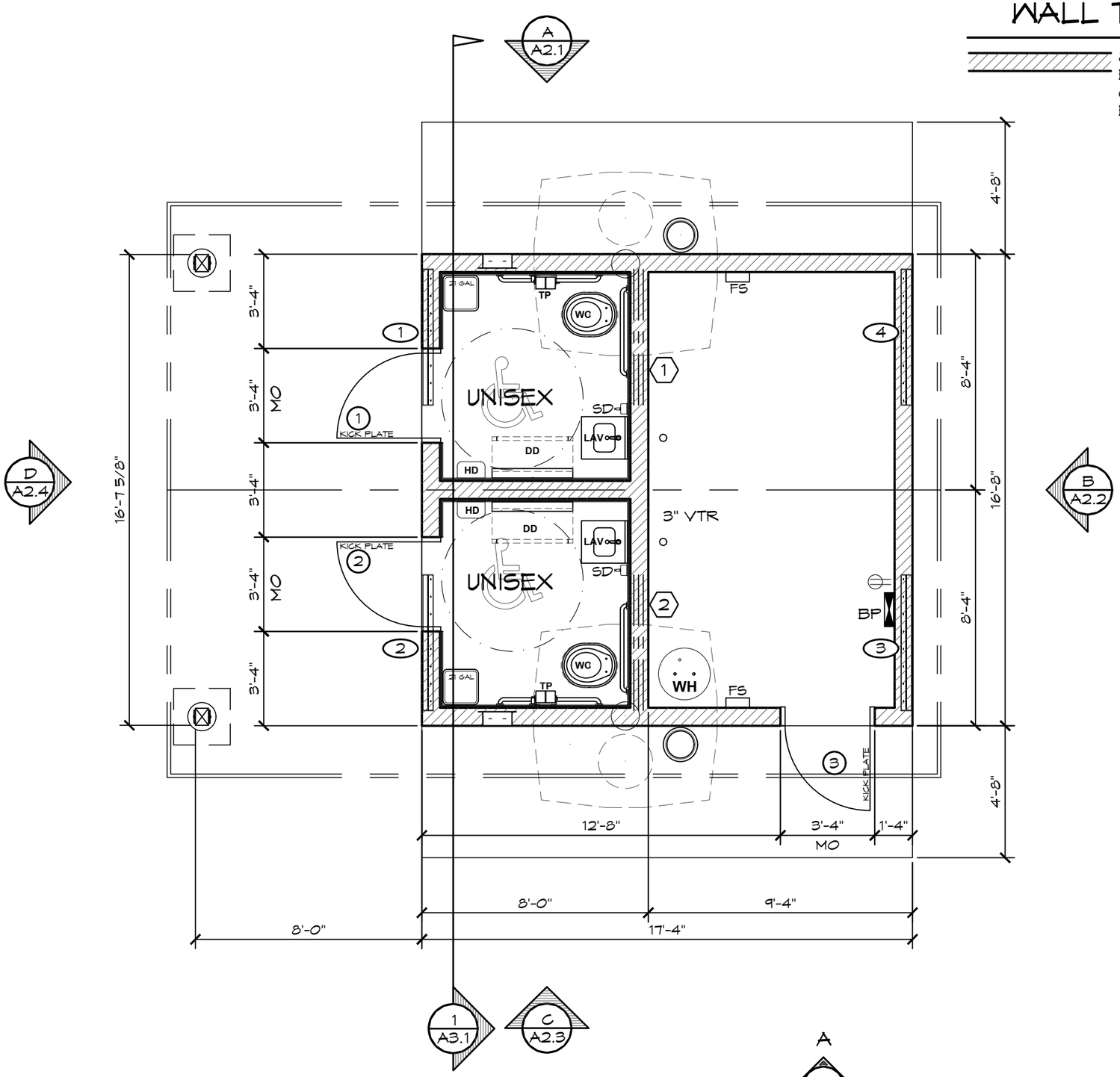

1 FLOOR PLAN

SCALE: 1/4" = 1'-0"

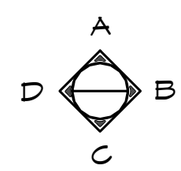

08/24/2020

CERTIFIED MASTER KITCHEN & BATH DESIGNER
CMKBD
Cassandra Ruport
ID #1063772
NKBA
Cassandra Ruport

EXPIRES: 01/01/2021

Structural members only were included in this structural review/design by PSE. Non-structural items are NOT included.

© 2020 ROMTEC, INC. ALL RIGHTS RESERVED. THESE PLANS AND DRAWINGS MAY NOT BE REPRODUCED, ADAPTED OR FURTHER DISTRIBUTED, AND NO BUILDINGS MAY BE CONSTRUCTED FROM THESE PLANS, WITHOUT THE WRITTEN PERMISSION OF ROMTEC, INC.

PSE Consulting Engineers, Inc.
www.structure1.com
Klamath Falls Office
250 Main Klamath Falls, Oregon 97603
Phone: (541) 850-6300 Fax: (541) 850-6233
info@structure1.com
ROMTEC 220-57

ROMTEC
18240 NORTH BANK ROAD
ROSEBURG, OR 97470
(541)-496-3541 FAX (541)-496-0803

PROJECT: 1015 ASPEN
DIAMOND HILL PARK
CUMBERLAND, RHODE ISLAND

SHEET TITLE: FLOOR PLAN

PLAN SET# DHP01

DATE: 07/02/2020

REVISIONS

REV.	DATE:	BY:
3	08/24/2020	TY

DRAWN BY: TY

SHEET NO. A1.1

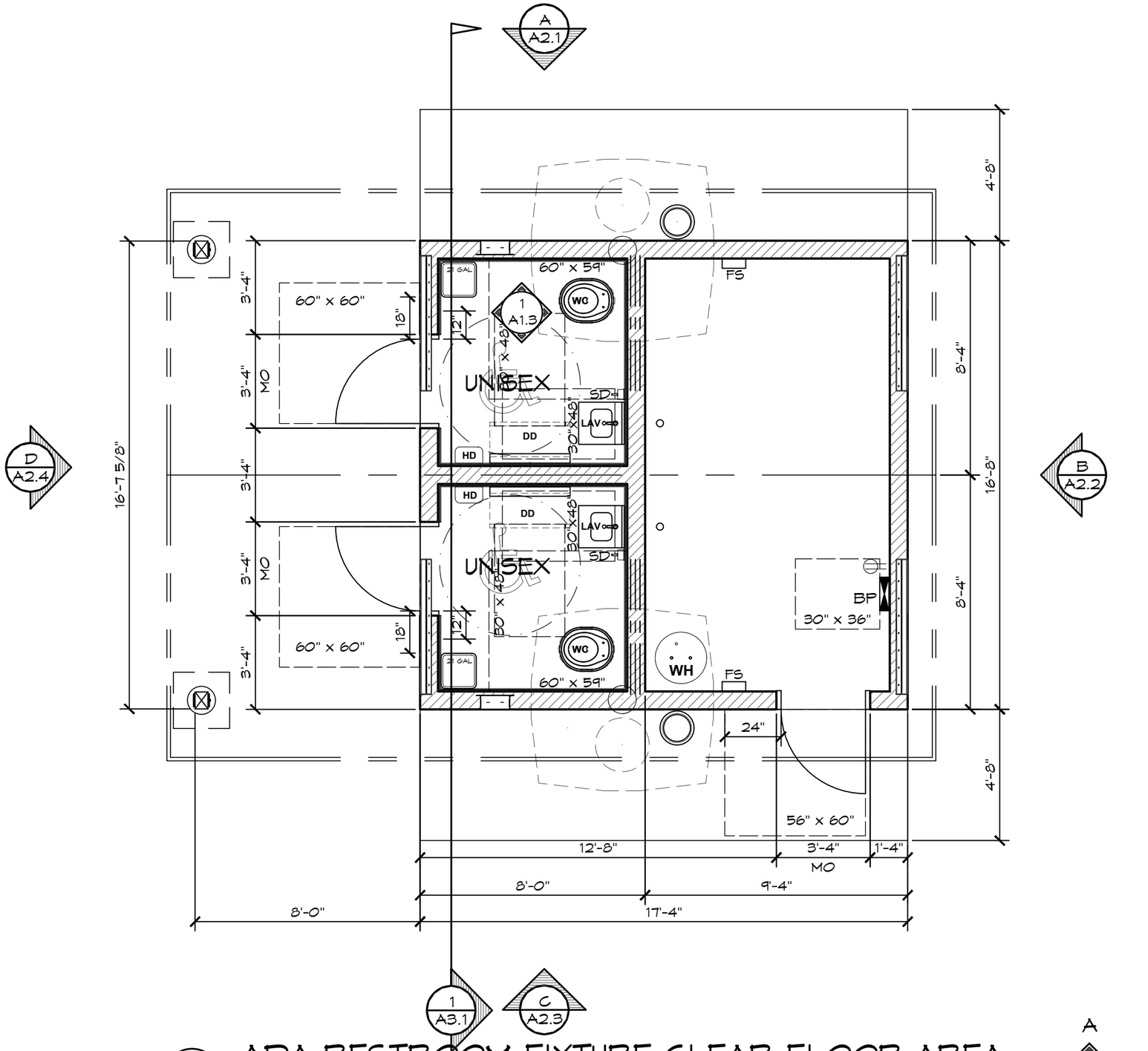

1 ADA RESTROOM FIXTURE CLEAR FLOOR AREA

SCALE: 1/4" = 1'-0"

08/24/2020

CERTIFIED MASTER KITCHEN & BATH DESIGNER
CMKBD
Cassandra Ruport
ID #1063772
NKBA
Cassandra Ruport
EXPIRES: 01/01/2021

Structural members only were included in this structural review/design by PSE. Non-structural items are NOT included.

© 2020 ROMTEC, INC. ALL RIGHTS RESERVED. THESE PLANS AND DRAWINGS MAY NOT BE REPRODUCED, ADAPTED OR FURTHER DISTRIBUTED, AND NO BUILDINGS MAY BE CONSTRUCTED FROM THESE PLANS, WITHOUT THE WRITTEN PERMISSION OF ROMTEC, INC.

PSE Consulting Engineers, Inc.
www.structure1.com
Klamath Falls Office
250 Main Klamath Falls, Oregon 97603
Phone: (541) 850-6300 Fax: (541) 850-6233
info@structure1.com
ROMTEC 220-57

ROMTEC
18240 NORTH BANK ROAD
ROSEBURG, OR 97470
(541)-496-3541 FAX (541)-496-0803

PROJECT: 1015 ASPEN
DIAMOND HILL PARK
CUMBERLAND, RHODE ISLAND

SHEET TITLE: ADA CLEAR SPACE

PLAN SET# DHP01

DATE: 07/02/2020

REVISIONS

REV.	DATE:	BY
3	08/24/2020	TY

DRAWN BY: TY

SHEET NO. A1.2

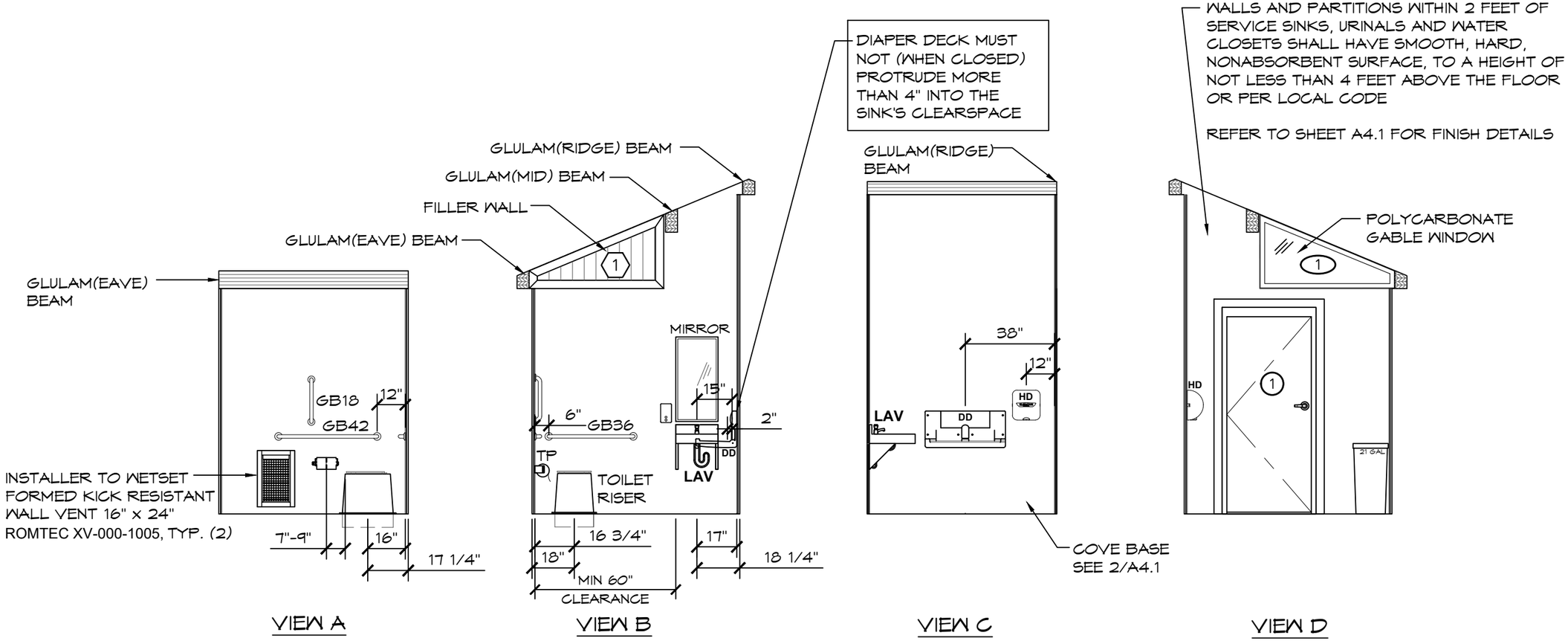

1 ADA RESTROOM INTERIOR ELEVATION VIEWS

SCALE: 1/4" = 1'-0"

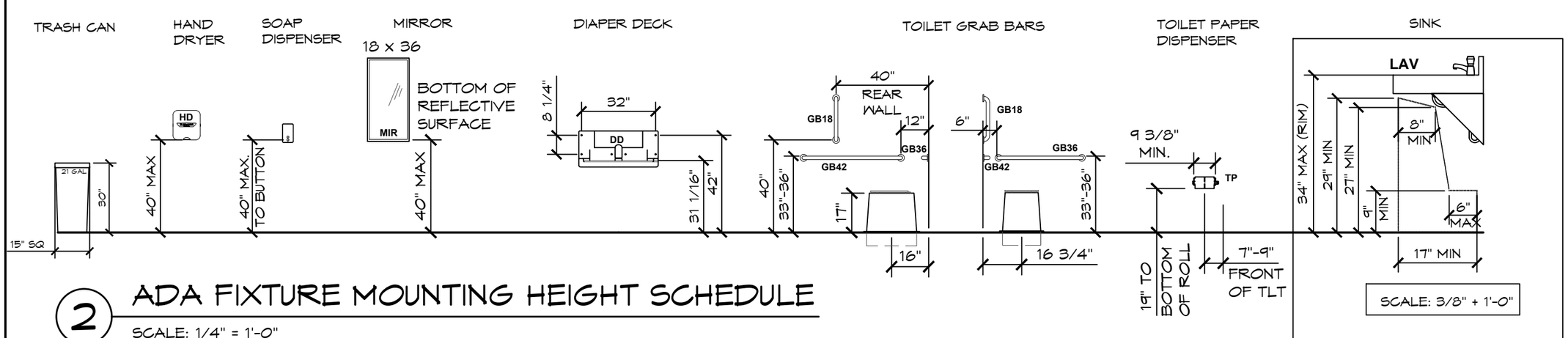

2 ADA FIXTURE MOUNTING HEIGHT SCHEDULE

SCALE: 1/4" = 1'-0"

08/24/2020

CERTIFIED MASTER KITCHEN & BATH DESIGNER
CMKBD
Cassandra Ruport
ID #1063772
NKBA
Cassandra Ruport

EXPIRES: 01/01/2021

Structural members only were included in this structural review/design by PSE. Non-structural items are NOT included.

© 2020 ROMTEC, INC. ALL RIGHTS RESERVED. THESE PLANS AND DRAWINGS MAY NOT BE REPRODUCED, ADAPTED OR FURTHER DISTRIBUTED, AND NO BUILDINGS MAY BE CONSTRUCTED FROM THESE PLANS, WITHOUT THE WRITTEN PERMISSION OF ROMTEC, INC.

PSE Consulting Engineers, Inc.
www.structure1.com
Klamath Falls Office
250 Main Klamath Falls, Oregon 97603
Phone: (541) 850-6300 Fax: (541) 850-6233
info@structure1.com
ROMTEC 220-57

ROMTEC
18240 NORTH BANK ROAD
ROSEBURG, OR 97470
(541)-496-3541 FAX (541)-496-0803

PROJECT: 1015 ASPEN

DIAMOND HILL PARK
CUMBERLAND, RHODE ISLAND

SHEET TITLE: INTERIOR ELEVATIONS

PLAN SET# DHP01

DATE: 07/02/2020

REVISIONS

REV.	DATE:	BY
2	7/27/2020	TY

DRAWN BY: TY

SHEET NO. A1.3

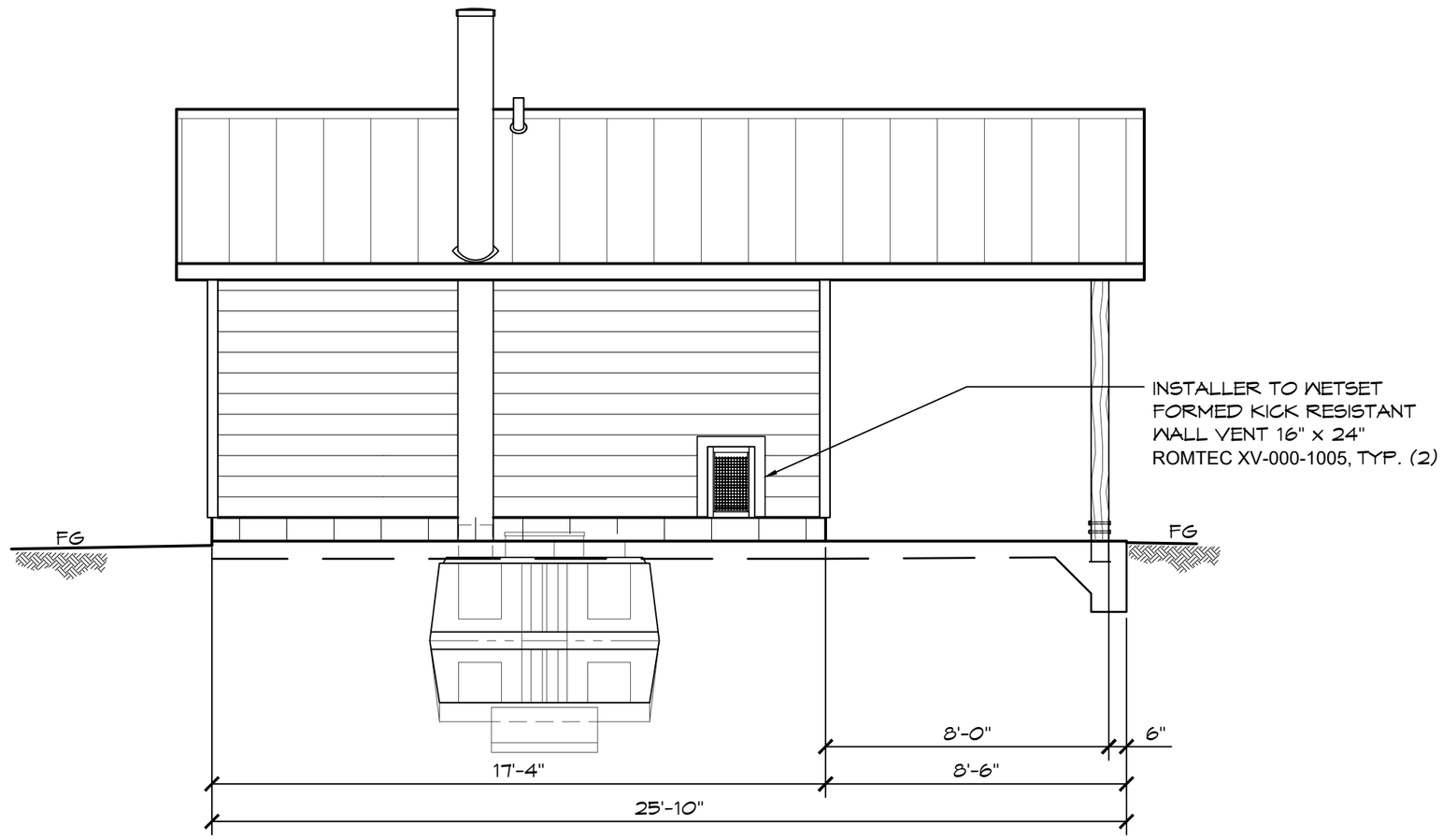

A ELEVATION VIEW

SCALE: 1/4" = 1'-0"

08/24/2020

CERTIFIED MASTER KITCHEN & BATH DESIGNER
CMKBD
Cassandra Ruport
ID #1063772
NKBA
Cassandra Ruport

EXPIRES: 01/01/2021

Structural members only were included in this structural review/design by PSE. Non-structural items are NOT included.

© 2020 ROMTEC, INC. ALL RIGHTS RESERVED. THESE PLANS AND DRAWINGS MAY NOT BE REPRODUCED, ADAPTED OR FURTHER DISTRIBUTED, AND NO BUILDINGS MAY BE CONSTRUCTED FROM THESE PLANS, WITHOUT THE WRITTEN PERMISSION OF ROMTEC, INC.

PSE Consulting Engineers, Inc.
www.structure1.com
Klamath Falls Office
250 Main Klamath Falls, Oregon 97603
Phone: (541) 850-6300 Fax: (541) 850-6233
info@structure1.com
ROMTEC 220-57

ROMTEC
18240 NORTH BANK ROAD
ROSEBURG, OR 97470
(541)-496-3541 FAX (541)-496-0803

PROJECT: 1015 ASPEN
DIAMOND HILL PARK
CUMBERLAND, RHODE ISLAND

SHEET TITLE: EXTERIOR ELEVATIONS

PLAN SET# DHP01

DATE: 07/02/2020

REVISIONS

REV.	DATE:	BY:
2	7/27/2020	TY

DRAWN BY: TY

SHEET NO. A2.1

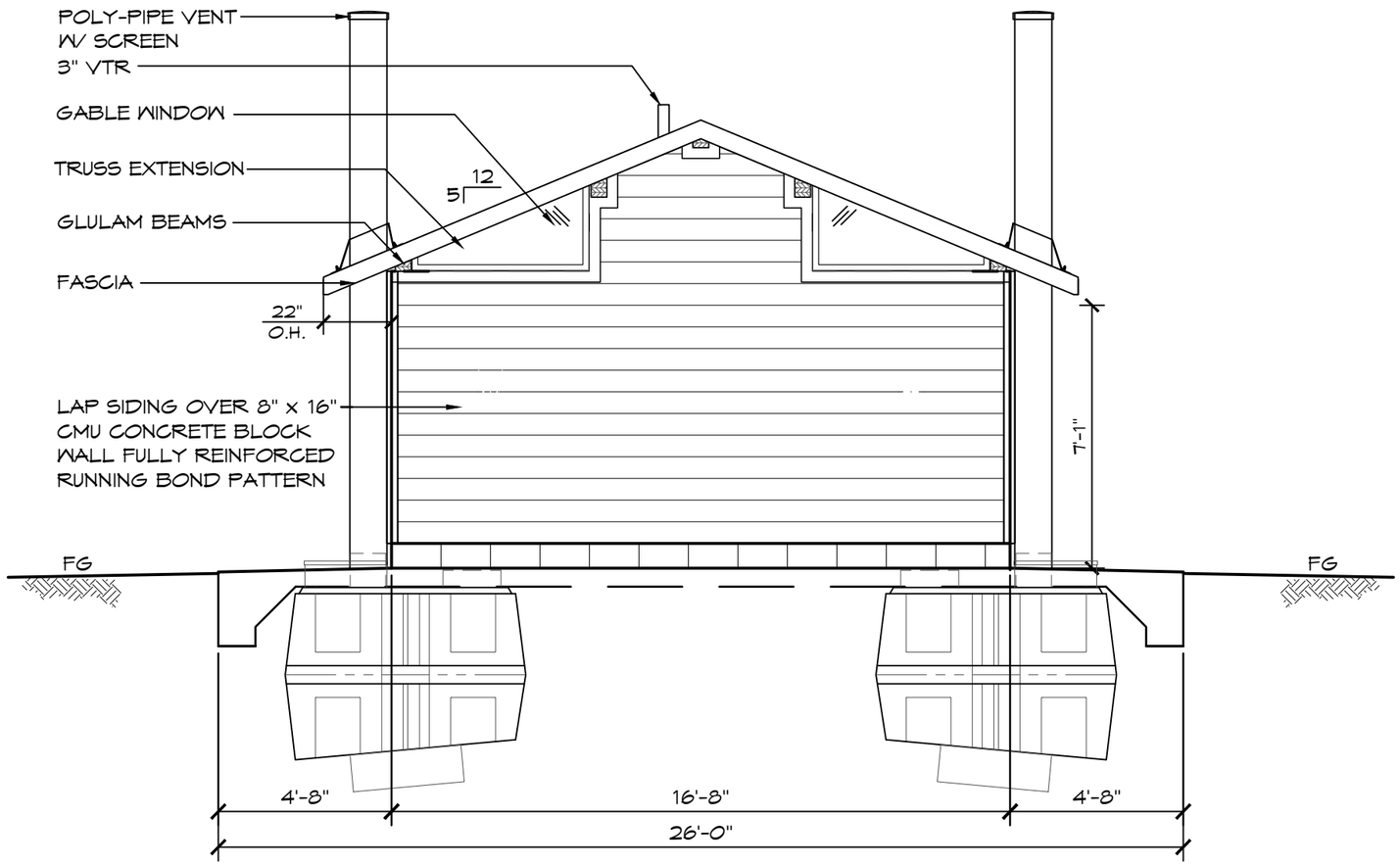

B ELEVATION VIEW

SCALE: 1/4" = 1'-0"

08/24/2020

CERTIFIED MASTER KITCHEN & BATH DESIGNER
CMKBD
Cassandra Ruport
ID #1063772
NKBA

Cassandra Ruport

EXPIRES: 01/01/2021

Structural members only were included in this structural review/design by PSE. Non-structural items are NOT included.

© 2020 ROMTEC, INC. ALL RIGHTS RESERVED. THESE PLANS AND DRAWINGS MAY NOT BE REPRODUCED, ADAPTED OR FURTHER DISTRIBUTED, AND NO BUILDINGS MAY BE CONSTRUCTED FROM THESE PLANS, WITHOUT THE WRITTEN PERMISSION OF ROMTEC, INC.

PSE Consulting Engineers, Inc.
www.structure1.com
Klamath Falls Office
250 Main Klamath Falls, Oregon 97603
Phone: (541) 850-6300 Fax: (541) 850-6233
info@structure1.com
ROMTEC 220-57

ROMTEC
18240 NORTH BANK ROAD
ROSEBURG, OR 97470
(541)-496-3541 FAX (541)-496-0803

PROJECT: 1015 ASPEN
DIAMOND HILL PARK
CUMBERLAND, RHODE ISLAND

SHEET TITLE: EXTERIOR ELEVATIONS

PLAN SET# DHP01

DATE: 07/02/2020

REVISIONS

REV.	DATE:	BY

DRAWN BY: TY

SHEET NO. A2.2

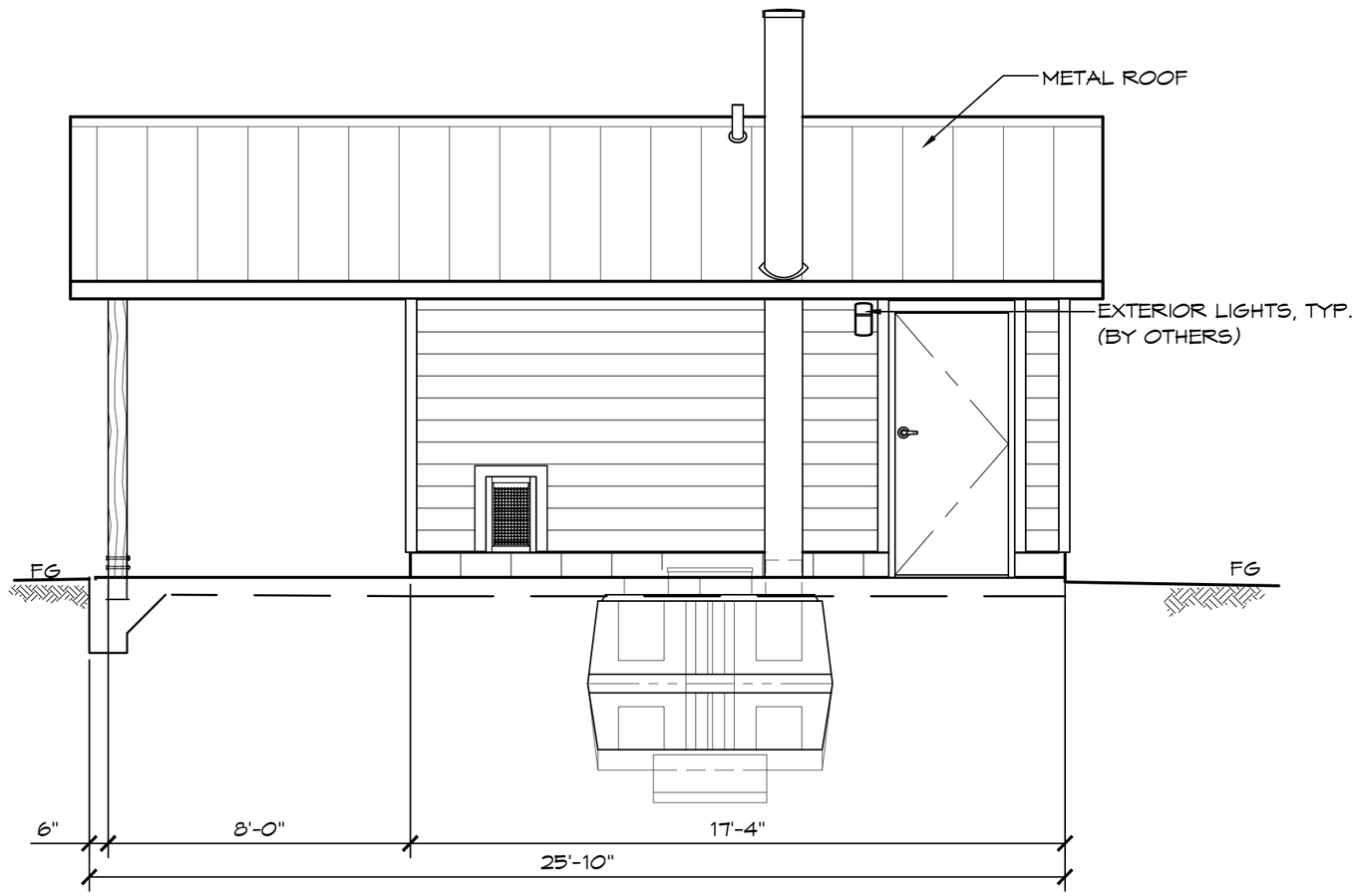

C ELEVATION VIEW

SCALE: 1/4" = 1'-0"

08/24/2020

CERTIFIED MASTER KITCHEN & BATH DESIGNER
CMKBD
Cassandra Ruport
ID #1063772
NKBA

Cassandra Ruport

EXPIRES: 01/01/2021

Structural members only were included in this structural review/design by PSE. Non-structural items are NOT included.

© 2020 ROMTEC, INC. ALL RIGHTS RESERVED. THESE PLANS AND DRAWINGS MAY NOT BE REPRODUCED, ADAPTED OR FURTHER DISTRIBUTED, AND NO BUILDINGS MAY BE CONSTRUCTED FROM THESE PLANS, WITHOUT THE WRITTEN PERMISSION OF ROMTEC, INC.

PSE Consulting Engineers, Inc.
www.structure1.com
Klamath Falls Office
250 Main Klamath Falls, Oregon 97603
Phone: (541) 850-6300 Fax: (541) 850-6233
info@structure1.com
ROMTEC 220-57

ROMTEC
18240 NORTH BANK ROAD
ROSEBURG, OR 97470
(541)-496-3541 FAX (541)-496-0803

PROJECT: 1015 ASPEN
DIAMOND HILL PARK
CUMBERLAND, RHODE ISLAND

SHEET TITLE: EXTERIOR ELEVATIONS

PLAN SET# DHP01

DATE: 07/02/2020

REVISIONS

REV.	DATE:	BY

DRAWN BY: TY

SHEET NO. A2.3

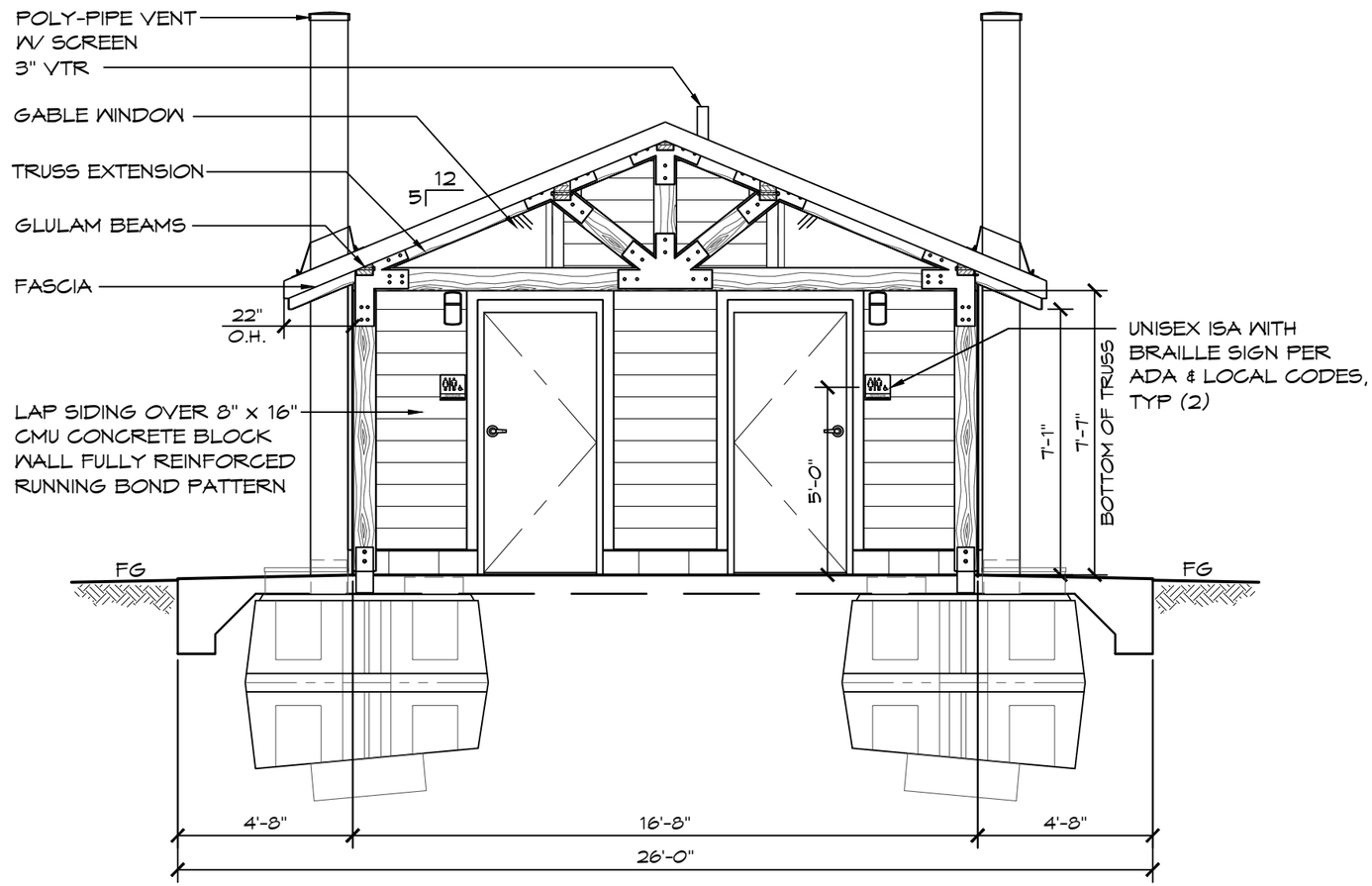

D ELEVATION VIEW

SCALE: 1/4" = 1'-0"

08/24/2020

CERTIFIED MASTER KITCHEN & BATH DESIGNER
CMKBD
Cassandra Ruport
ID #1063772
NKBA
Cassandra Ruport

EXPIRES: 01/01/2021

Structural members only were included in this structural review/design by PSE. Non-structural items are NOT included.

© 2020 ROMTEC, INC. ALL RIGHTS RESERVED. THESE PLANS AND DRAWINGS MAY NOT BE REPRODUCED, ADAPTED OR FURTHER DISTRIBUTED, AND NO BUILDINGS MAY BE CONSTRUCTED FROM THESE PLANS, WITHOUT THE WRITTEN PERMISSION OF ROMTEC, INC.

PSE Consulting Engineers, Inc.
www.structure1.com
Klamath Falls, Oregon
250 Main Klamath Falls, Oregon 97603
Phone: (541) 850-6300 Fax: (541) 850-6233
info@structure1.com
ROMTEC 220-57

ROMTEC
18240 NORTH BANK ROAD
ROSEBURG, OR 97470
(541)-496-3541 FAX (541)-496-0803

PROJECT: 1015 ASPEN
DIAMOND HILL PARK
CUMBERLAND, RHODE ISLAND

SHEET TITLE: EXTERIOR ELEVATIONS

PLAN SET# DHP01

DATE: 07/02/2020

REVISIONS

REV.	DATE:	BY
2	7/27/2020	TY

DRAWN BY: TY

SHEET NO. A2.4

WALL TYPE SCHEDULE

8" REINFORCED CONCRETE MASONRY BLOCK WALL WITH MORTAR JOINTS, GROUTED SOLID ALL CELLS RUNNING BOND PATTERN.

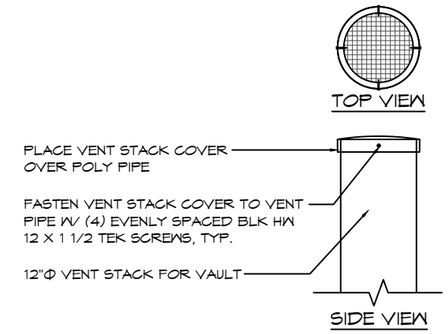

2 VENT STACK COVER DETAIL

SCALE: 1/2" = 1'-0"

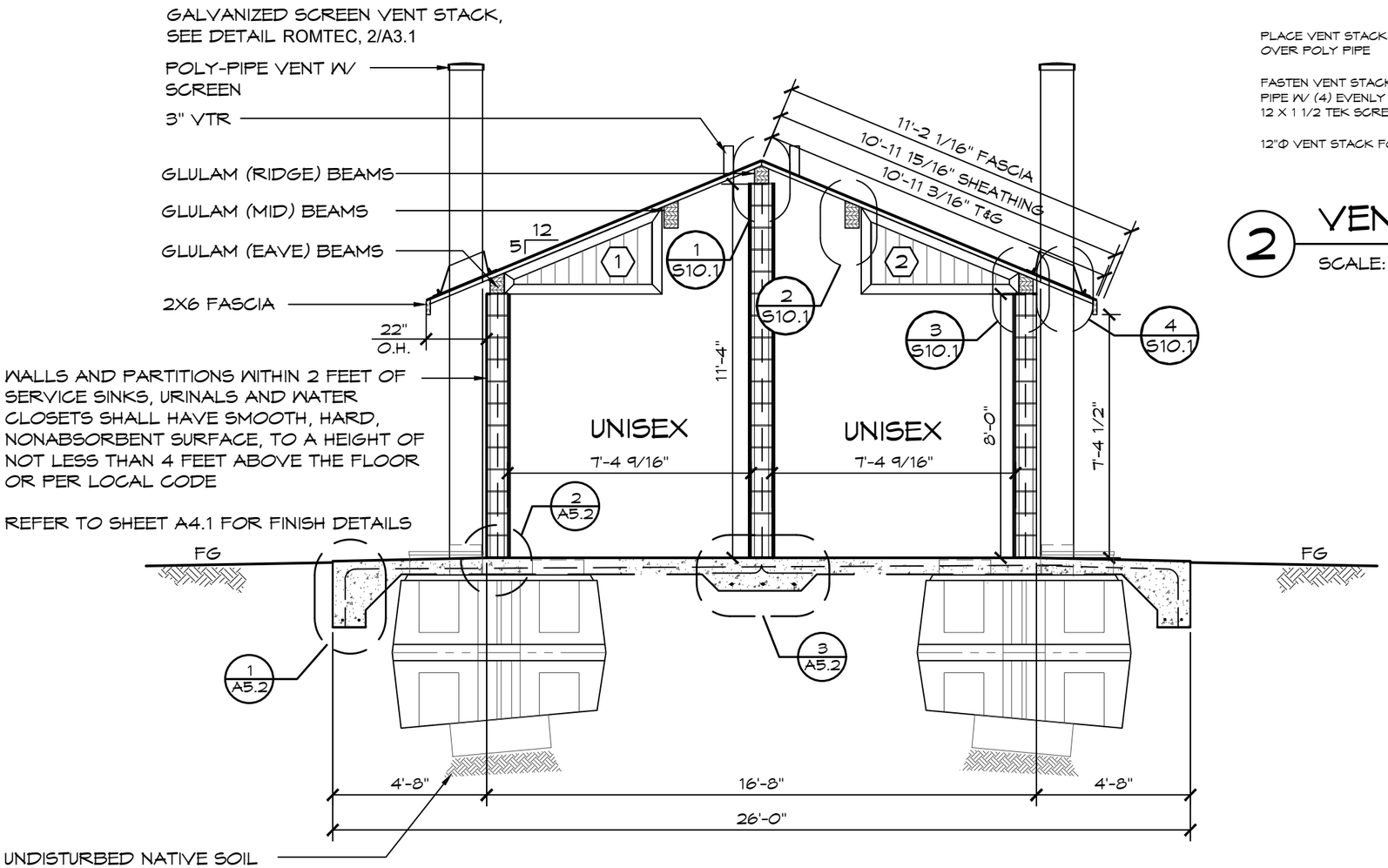

1 SECTION VIEW

SCALE: 1/4" = 1'-0"

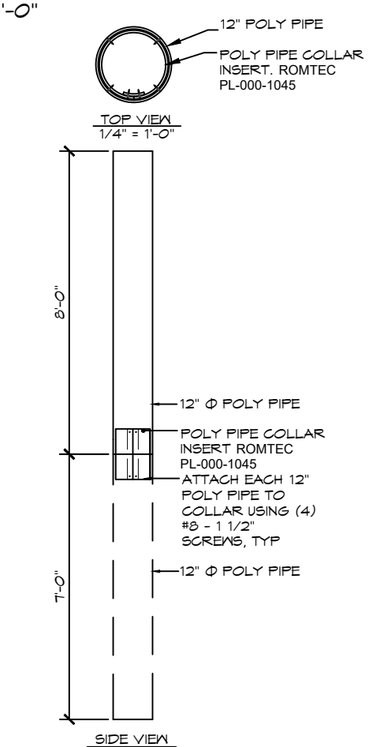

3 POLY-PIPE CONNECTION

SCALE: 1/4" = 1'-0"

08/24/2020

CERTIFIED MASTER KITCHEN & BATH DESIGNER
CMKBD
Cassandra Ruport
ID #1063772
NKBA
Cassandra Ruport
EXPIRES: 01/01/2021

Structural members only were included in this structural review/design by PSE. Non-structural items are NOT included.

© 2020 ROMTEC, INC. ALL RIGHTS RESERVED. THESE PLANS AND DRAWINGS MAY NOT BE REPRODUCED, ADAPTED OR FURTHER DISTRIBUTED, AND NO BUILDINGS MAY BE CONSTRUCTED FROM THESE PLANS, WITHOUT THE WRITTEN PERMISSION OF ROMTEC, INC.

PSE Consulting Engineers, Inc.
www.structure1.com
Klamath Falls Office
250 Main Street, Klamath Falls, Oregon 97603
Phone: (541) 850-6300 Fax: (541) 850-6233
info@structure1.com
ROMTEC 220-57

ROMTEC
18240 NORTH BANK ROAD
ROSEBURG, OR 97470
(541)-496-3541 FAX (541)-496-0803

PROJECT: 1015 ASPEN
DIAMOND HILL PARK
CUMBERLAND, RHODE ISLAND

SHEET TITLE: BUILDING SECTIONS

PLAN SET# DHP01
DATE: 07/02/2020

REVISIONS

REV.	DATE:	BY:

DRAWN BY: TY

SHEET NO. A3.1

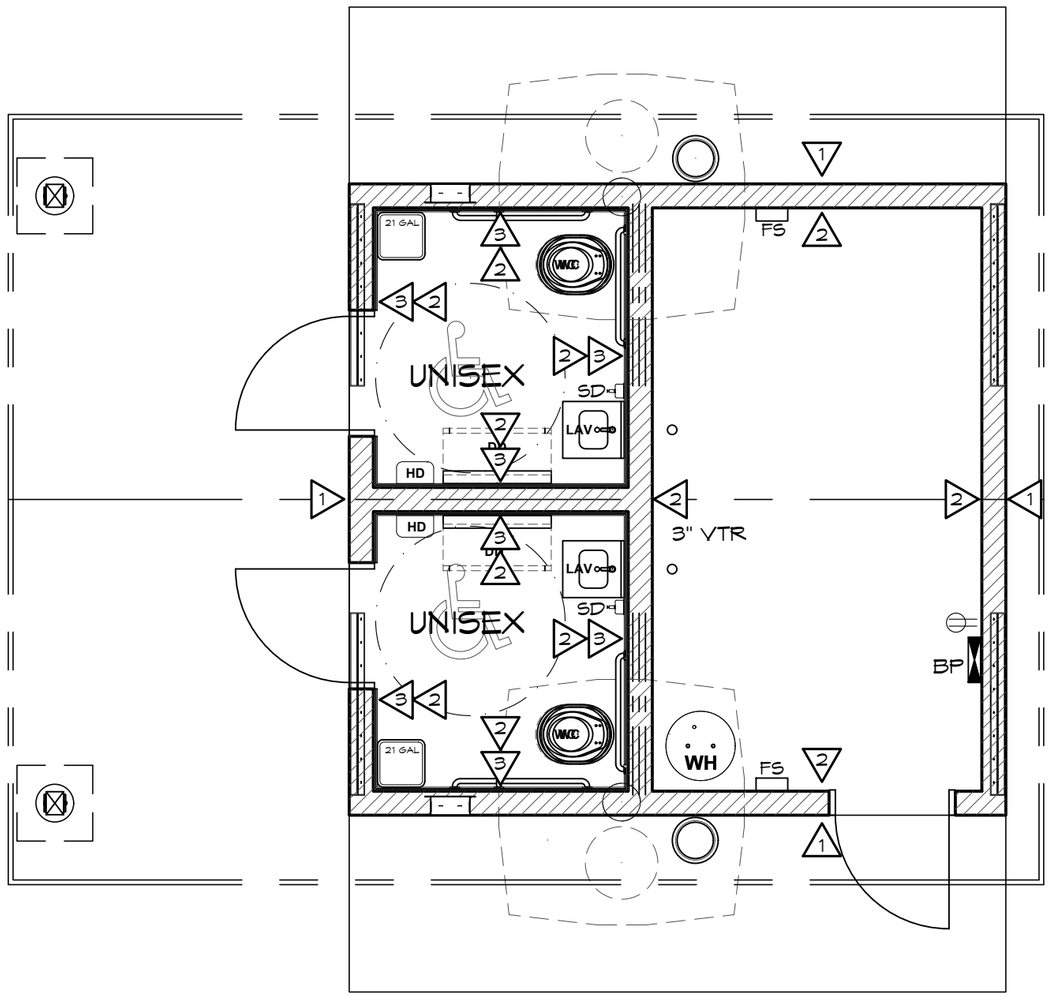

1 WALL FINISH PLAN

SCALE: 1/4" = 1'-0"

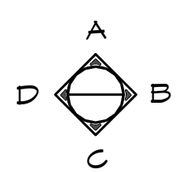

FINISH SCHEDULE

NO.	LOCATION	FINISH	DETAIL
1	EXTERIOR WALL	FIBER CEMENT LAPS SIDING OVER 8" SMOOTH FACE REINFORCED CONCRETE MASONRY BLOCK WALL W/ MORTAR JOINTS, GROUTED SOLID ALL CELLS RUNNING BOND PATTERN.	
2	INTERIOR WALL	PRIMED & (2) COATS OF EPOXY PAINT CMU WALLS FLOOR TO CEILING (INSTALLER SUPPLIED)	
3	INTERIOR WALL RESTROOMS	FURRED INTERIOR WALL W/ 1/2" GREEN GYPSUM BOARD (INSTALLER SUPPLIED) [PAINT OVER GREEN BOARD, SEE FINISH (2)]	
	CEILING	2X6 T&G TO BE SEALED WITH CLEAR COAT (INSTALLER SUPPLIED)	
	FLOOR	CONCRETE WITH A WATER BASED CONCRETE SEALER (PROVIDED BY INSTALLER)	
	COVE BASE IN RESTROOMS ONLY	SANITARY TILE COVE BASE	DETAIL 2/A4.1

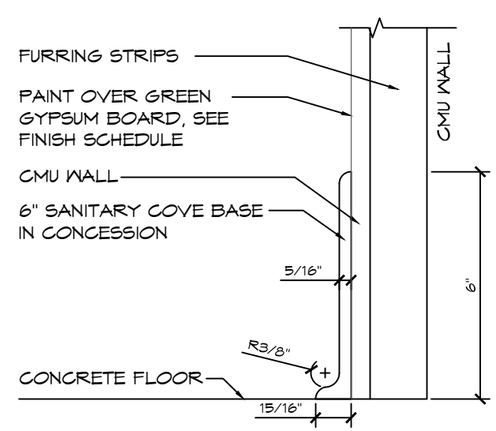

2 COVE BASE DETAIL

SCALE: 3" = 1'-0"

08/24/2020

CERTIFIED MASTER KITCHEN & BATH DESIGNER
CMKBD
Cassandra Ruport
ID #1063772
NKBA
Cassandra Ruport

EXPIRES: 01/01/2021

Structural members only were included in this structural review/design by PSE. Non-structural items are NOT included.

© 2020 ROMTEC, INC. ALL RIGHTS RESERVED. THESE PLANS AND DRAWINGS MAY NOT BE REPRODUCED, ADAPTED OR FURTHER DISTRIBUTED, AND NO BUILDINGS MAY BE CONSTRUCTED FROM THESE PLANS, WITHOUT THE WRITTEN PERMISSION OF ROMTEC, INC.

PSE Consulting Engineers, Inc.
www.structure1.com
Klamath Falls Office
250 Main Klamath Falls, Oregon 97603
Phone: (541) 850-6300 Fax: (541) 850-6233
info@structure1.com
ROMTEC 220-57

ROMTEC
18240 NORTH BANK ROAD
ROSEBURG, OR 97470
(541)-496-3541 FAX (541)-496-0803

PROJECT: 1015 ASPEN
DIAMOND HILL PARK
CUMBERLAND, RHODE ISLAND

SHEET TITLE: INTERIOR WALL FINISH PLAN

PLAN SET# DHP01

DATE: 07/02/2020

REVISIONS

REV.	DATE:	BY
2	7/27/2020	TY
3	08/24/2020	TY

DRAWN BY: TY

SHEET NO. A4.1

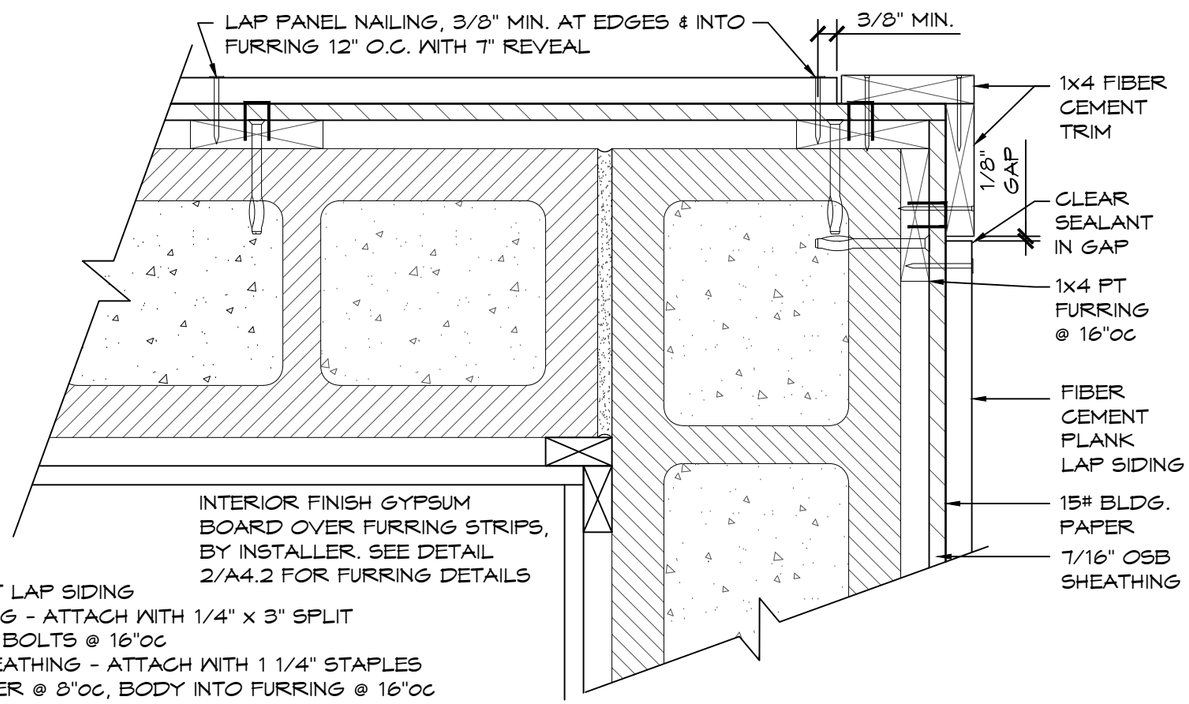

FIBER CEMENT LAP SIDING
1x4 PT FURRING - ATTACH WITH 1/4" x 3" SPLIT ANCHOR BOLTS @ 16"oc
7/16" OSB SHEATHING - ATTACH WITH 1 1/4" STAPLES PERIMETER @ 8"oc, BODY INTO FURRING @ 16"oc
FIBER CEMENT LAP PLANKS (7" REVEAL) - ATTACH WITH 1 3/4" ROOFING NAILS @ 16"oc INTO FURRING
FIBER CEMENT TRIM PIECES - ATTACH WITH 2" FINISH NAILS @ 8"oc, COUNTERSINK & FINISH

1 CMU CORNER

SCALE: 3" = 1'-0"

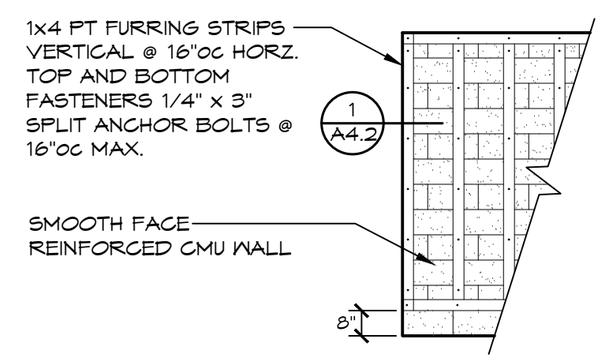

2 FURRING STRIP WALL DETAIL

SCALE: 1/4" = 1'-0"

08/24/2020
CERTIFIED MASTER KITCHEN & BATH DESIGNER
CMKBD
Cassandra Ruport
ID #1063772
NKBA
Cassandra Ruport
EXPIRES: 01/01/2021

Structural members only were included in this structural review/design by PSE. Non-structural items are NOT included.

© 2020 ROMTEC, INC. ALL RIGHTS RESERVED. THESE PLANS AND DRAWINGS MAY NOT BE REPRODUCED, ADAPTED OR FURTHER DISTRIBUTED, AND NO BUILDINGS MAY BE CONSTRUCTED FROM THESE PLANS, WITHOUT THE WRITTEN PERMISSION OF ROMTEC, INC.

PSE Consulting Engineers, Inc.
www.structure1.com
Klamath Falls Office
250 Main Klamath Falls, Oregon 97603
Phone: (541) 850-6300 Fax: (541) 850-6233
info@structure1.com
ROMTEC 220-57

ROMTEC
18240 NORTH BANK ROAD
ROSEBURG, OR 97470
(541)-496-3541 FAX (541)-496-0803

PROJECT: 1015 ASPEN
DIAMOND HILL PARK
CUMBERLAND, RHODE ISLAND

SHEET TITLE: WALL FINISH DETAILS

PLAN SET# DHP01
DATE: 07/02/2020

REVISIONS

REV.	DATE:	BY
3	08/24/2020	TY

DRAWN BY: TY

SHEET NO. A4.2

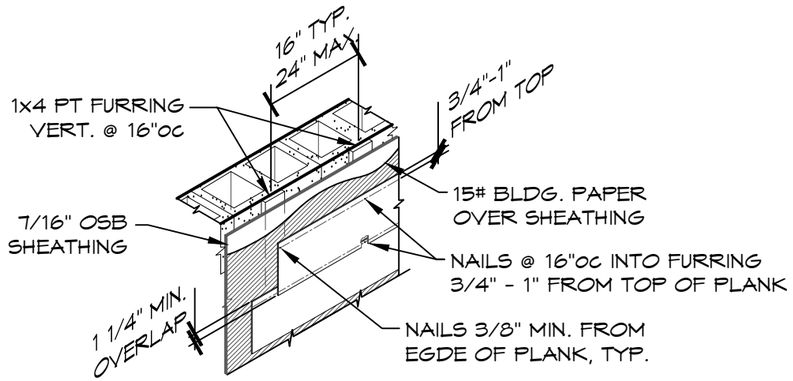

SIDING MANUFACTURE DOES NOT RECOMMEND CAULKING AT FIELD BUTT JOINTS.
INSTALL FACTORY EDGES TOGETHER AT BUTT JOINTS.

1 FIBER CEMENT LAP DETAILS

SCALE: 1/2" = 1'-0"

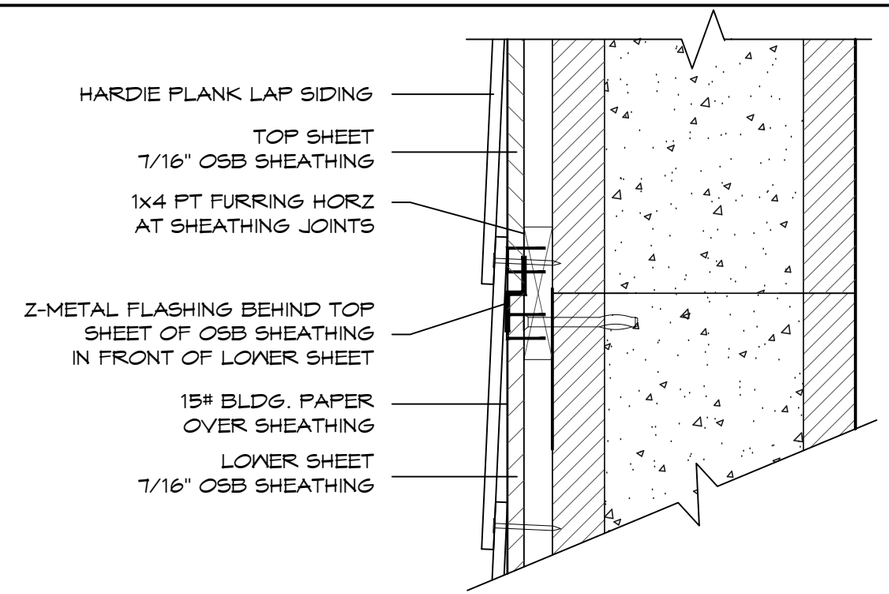

3 SHEATHING INTERFACE DETAIL

SCALE: 3" = 1'-0"

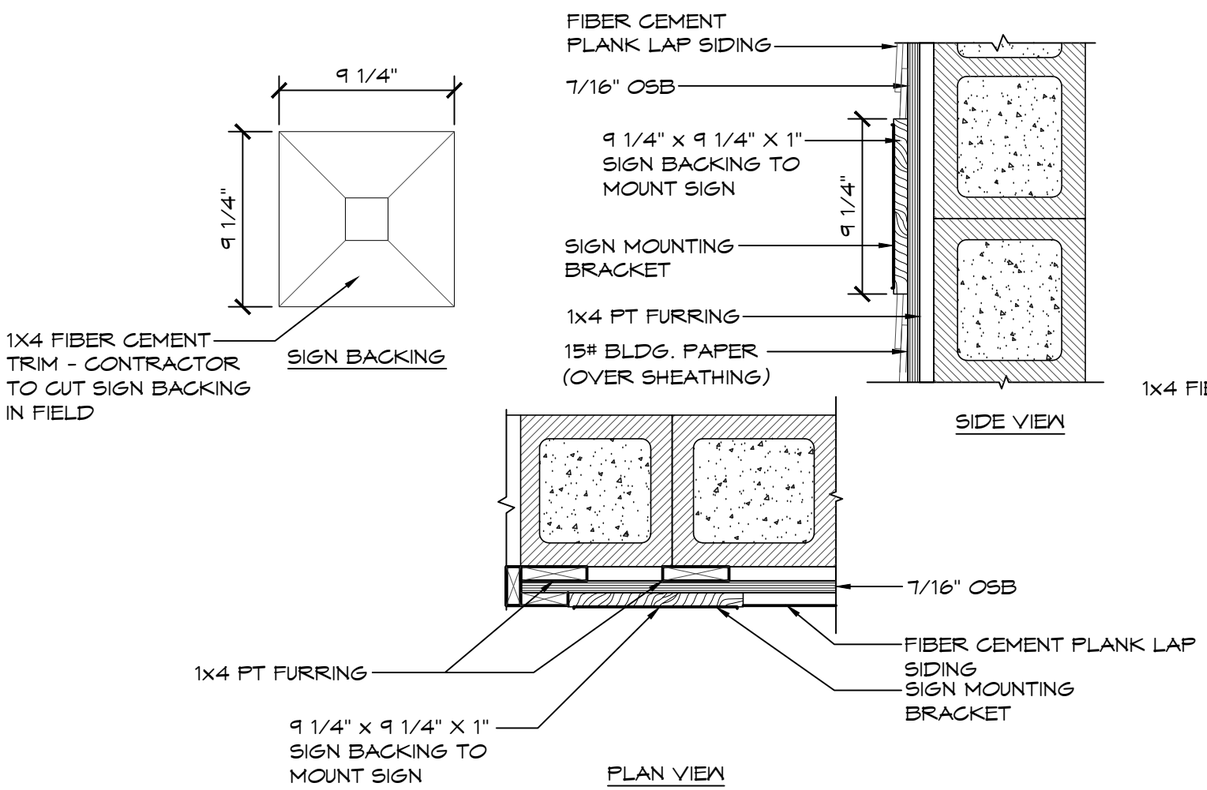

2 SIGN MOUNTING DETAIL

SCALE: 1 1/2" = 1'-0"

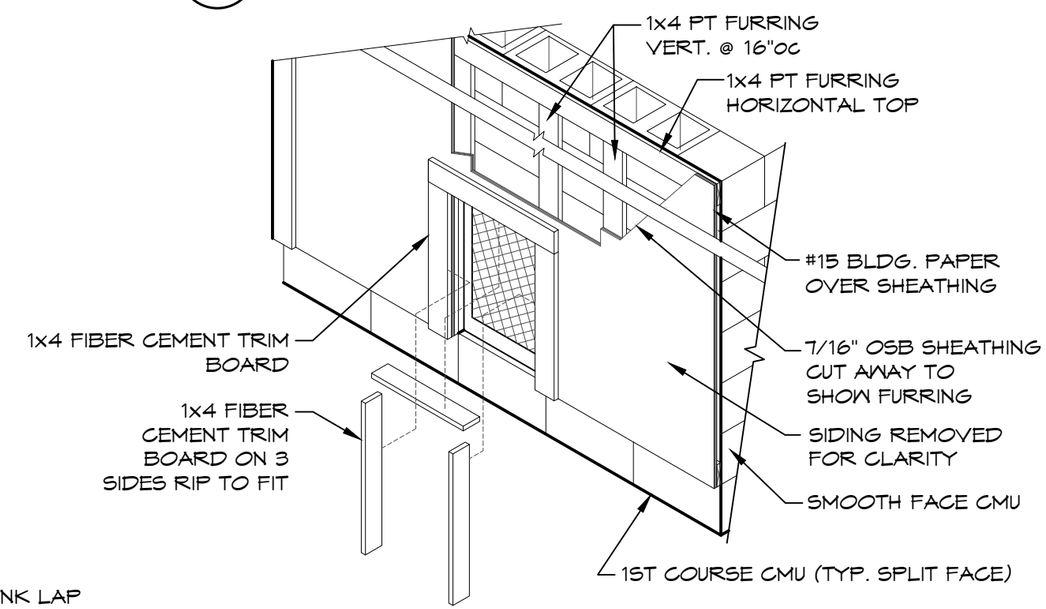

4 VENT TRIM DETAIL

SCALE: NTS

08/24/2020
CERTIFIED MASTER KITCHEN & BATH DESIGNER
CMKBD
Cassandra Ruport
ID #1063772
NKBA
Cassandra Ruport
EXPIRES: 01/01/2021

Structural members only were included in this structural review/design by PSE. Non-structural items are NOT included.

PSE Consulting Engineers, Inc.
www.structure1.com
Klamath Falls Office
250 Main Klamath Falls, Oregon 97603
Phone: (541) 850-6300 Fax: (541) 850-6233
info@structure1.com
ROMTEC 220-57

ROMTEC
18240 NORTH BANK ROAD
ROSEBURG, OR 97470
(541)-496-0541 FAX (541)-496-0803

PROJECT: 1015 ASPEN
DIAMOND HILL PARK
CUMBERLAND, RHODE ISLAND

SHEET TITLE: WALL FINISH DETAILS

PLAN SET# DHP01
DATE: 07/02/2020

REVISIONS

REV.	DATE:	BY:
2	7/27/2020	TY

DRAWN BY: TY

SHEET NO. A4.3

© 2020 ROMTEC, INC. ALL RIGHTS RESERVED. THESE PLANS AND DRAWINGS MAY NOT BE REPRODUCED, ADAPTED OR FURTHER DISTRIBUTED, AND NO BUILDINGS MAY BE CONSTRUCTED FROM THESE PLANS, WITHOUT THE WRITTEN PERMISSION OF ROMTEC, INC.

DOOR SCHEDULE

NO.	SIZE (WxHxT)	DOOR	DOOR SWING	FRAME	HARDWARE GROUP	REMARKS
1	36" x 84" x 1 3/4"	FRP	RIGHT HAND REVERSE (SWING OUT)	F16 LEFT HAND	DO-1	
2	36" x 84" x 1 3/4"	FRP	LEFT HAND REVERSE (SWING OUT)	F16 RIGHT HAND	DO-1	NOTE: KICK PLATE LOCATIONS ARE SHOWN ON SHEET A1.1
3	36" x 84" x 1 3/4"	FRP	RIGHT HAND REVERSE (SWING OUT)	F16 LEFT HAND	DO-2	

DOOR HARDWARE SCHEDULE (QTYS PER DOOR)

GROUP DO-1	GROUP DO-2	
3	3	EACH HINGE 4.5" x 4.5" S.S. (NRP)
1	1	DOOR CLOSER, (USE THRU BOLT ANCHORING OPTION)
1	-	LEVER LOCKSET (DORMITORY)
-	1	LEVER LOCKSET (CLASSROOM)
1	1	KICK PLATE, 10" X 34"
1	1	THRESHOLD
1	1	SWEEP
6	6	WIRE DOOR CLIPS

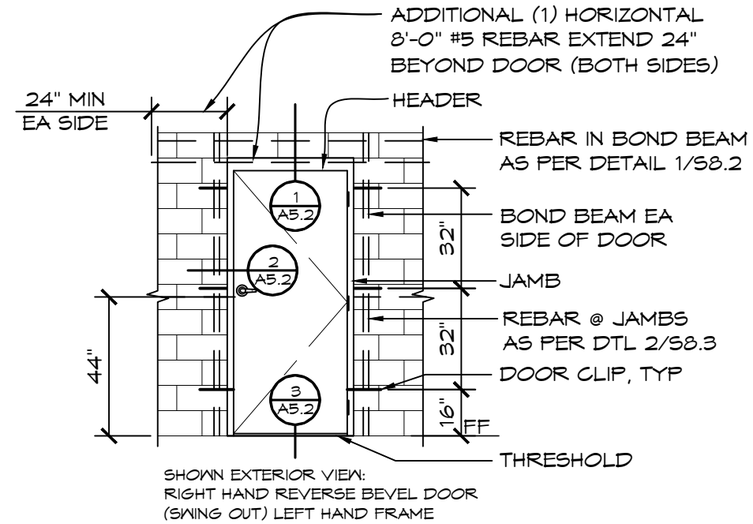

SHOWN EXTERIOR VIEW:
RIGHT HAND REVERSE BEVEL DOOR
(SWING OUT) LEFT HAND FRAME

1 DOOR DETAILS

SCALE: 1/4' = 1'-0"

08/24/2020
CERTIFIED MASTER KITCHEN & BATH DESIGNER
CMKBD
Cassandra Ruport
ID #1063772
NKBA
Cassandra Ruport
EXPIRES: 01/01/2021

Structural members only were included in this structural review/design by PSE. Non-structural items are NOT included.

© 2020 ROMTEC, INC. ALL RIGHTS RESERVED. THESE PLANS AND DRAWINGS MAY NOT BE REPRODUCED, ADAPTED OR FURTHER DISTRIBUTED, AND NO BUILDINGS MAY BE CONSTRUCTED FROM THESE PLANS, WITHOUT THE WRITTEN PERMISSION OF ROMTEC, INC.

PSE Consulting Engineers, Inc.
www.structure1.com
Klamath Falls Office
250 Main Klamath Falls, Oregon 97603
Phone: (541) 850-6300 Fax: (541) 850-6233
info@structure1.com
ROMTEC 220-57

ROMTEC
18240 NORTH BANK ROAD
ROSEBURG, OR 97470
(541)-496-3541 FAX (541)-496-0803

PROJECT: 1015 ASPEN
DIAMOND HILL PARK
CUMBERLAND, RHODE ISLAND

SHEET TITLE: DOOR SCHEDULE

PLAN SET# DHP01
DATE: 07/02/2020

REVISIONS

REV.	DATE:	BY
2	7/27/2020	TY

DRAWN BY: TY

SHEET NO. A5.1

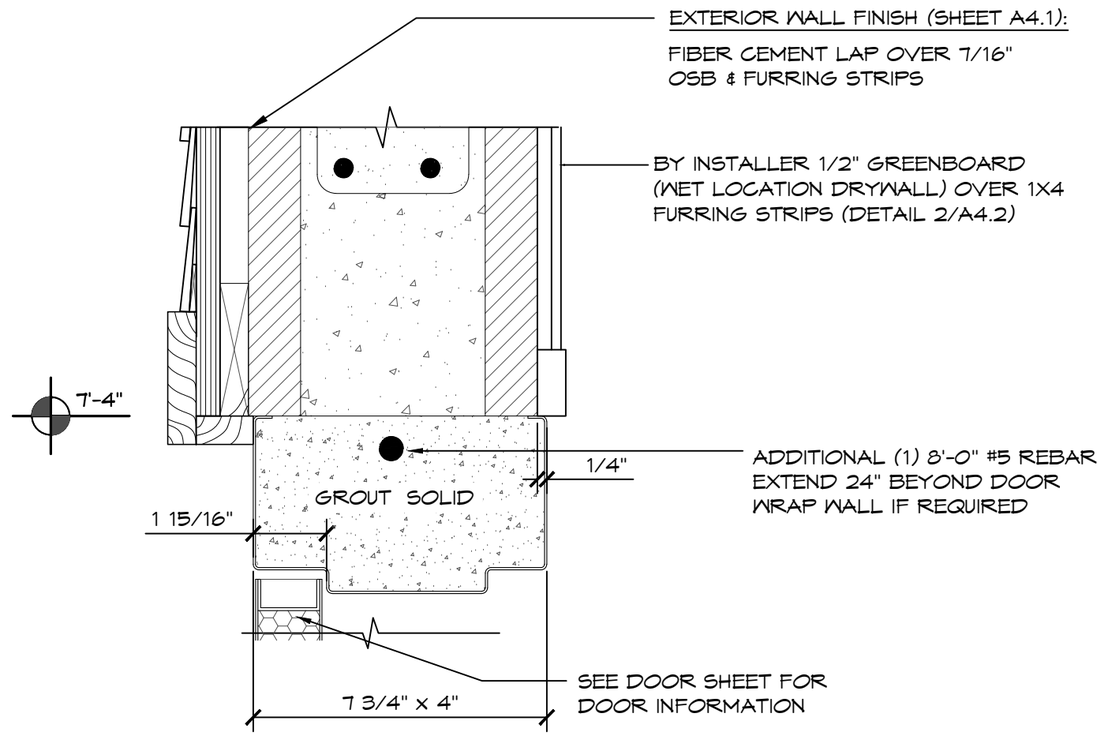

1 HEADER DETAIL

SCALE: 3" = 1'-0"

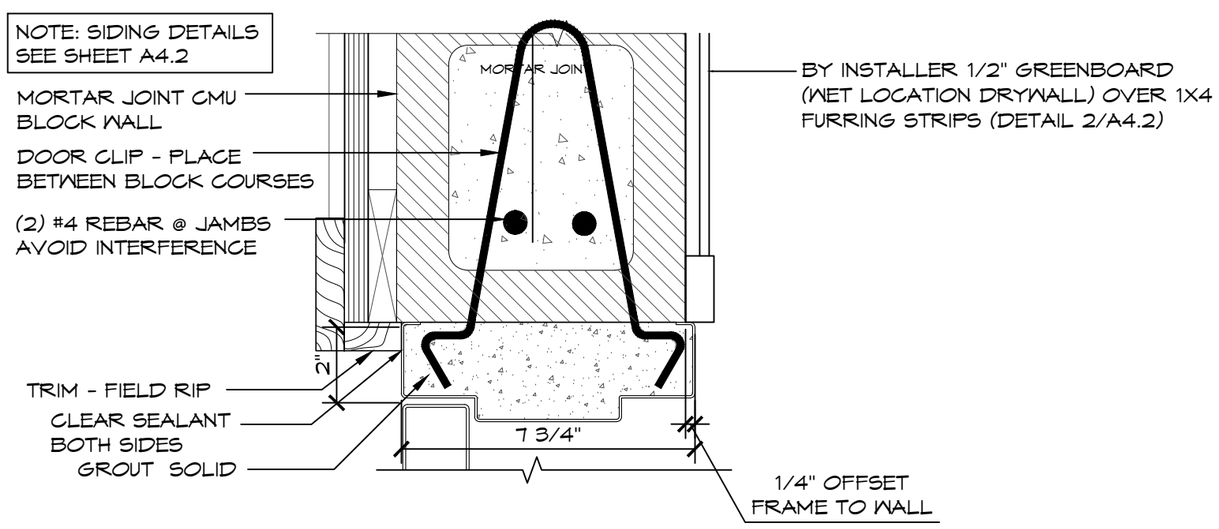

2 JAM DETAIL

SCALE: 3" = 1'-0"

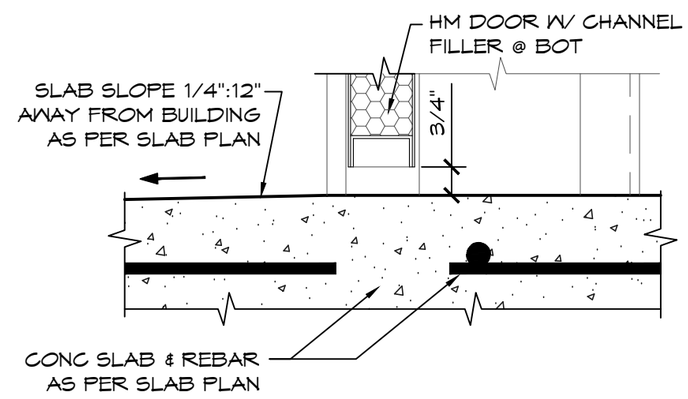

3 THRESHOLD DETAIL

SCALE: 3" = 1'-0"

08/24/2020

CERTIFIED MASTER KITCHEN & BATH DESIGNER
CMKBD
Cassandra Ruport
ID #1063772
NKBA
Cassandra Ruport

EXPIRES: 01/01/2021

Structural members only were included in this structural review/design by PSE. Non-structural items are NOT included.

© 2020 ROMTEC, INC. ALL RIGHTS RESERVED. THESE PLANS AND DRAWINGS MAY NOT BE REPRODUCED, ADAPTED OR FURTHER DISTRIBUTED, AND NO BUILDINGS MAY BE CONSTRUCTED FROM THESE PLANS, WITHOUT THE WRITTEN PERMISSION OF ROMTEC, INC.

PSE Consulting Engineers, Inc.
www.structure1.com
Klamath Falls Office
250 Main Klamath Falls, Oregon 97603
Phone: (541) 850-6300 Fax: (541) 850-6233
info@structure1.com
ROMTEC 220-57

ROMTEC
18240 NORTH BANK ROAD
ROSEBURG, OR 97470
(541)-496-3541 FAX (541)-496-0803

PROJECT: 1015 ASPEN
DIAMOND HILL PARK
CUMBERLAND, RHODE ISLAND

SHEET TITLE: DOOR DETAILS

PLAN SET# DHP01

DATE: 07/02/2020

REVISIONS

REV.	DATE:	BY:
2	7/27/2020	TY

DRAWN BY: TY

SHEET NO. A5.2

WINDOW SCHEDULE

SYM	SIZE	INSIDE INSERT	SLOPE	ANCHORS SILL	ANCHORS	ANCHORS HYP		
1	57 3/8" x 31 5/16" x 7 3/8"	POLYCARBONATE	5:12	4		8	ROMTEC XW-050-1001 OPP OF SHOWN	SEE SHEET A6.2
2	57 3/8" x 31 5/16" x 7 3/8"	POLYCARBONATE	5:12	4		8	ROMTEC XW-050-1001	SEE SHEET A6.2
3	57 3/8" x 31 5/16" x 7 3/8"	POLYCARBONATE	5:12	4		8	ROMTEC XW-050-1001 OPP OF SHOWN	SEE SHEET A6.2
4	57 3/8" x 31 5/16" x 7 3/8"	POLYCARBONATE	5:12	4		8	ROMTEC XW-050-1001	SEE SHEET A6.2

HARDWARE

QTY PER WINDOW

8 #12 x 1 1/2" WOOD SCREW

4 1/2" x 4" TITEN HD SCREW

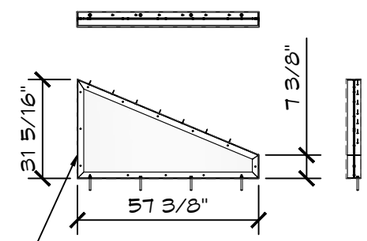

GABLE WINDOW - POLYCABONATE
ROMTEC XV-050-1001 , TYP.

NOTE: DURING THE CONSTRUCTION PROCESS IT IS COMMON FOR SMALL GAPS TO APPEAR IN ANY NUMBER OF PLACES. ROMTEC DOES NOT PROVIDE CAULK OR ANY OTHER MATERIAL TO FILL THESE SMALL GAPS UNLESS IT IS SPECIFIED IN OUR SUBMITTAL

08/24/2020
CERTIFIED MASTER KITCHEN & BATH DESIGNER
CMKBD
Cassandra Ruport
ID #1063772
NKBA
Cassandra Ruport
EXPIRES: 01/01/2021

Structural members only were included in this structural review/design by PSE. Non-structural items are NOT included.

© 2020 ROMTEC, INC. ALL RIGHTS RESERVED. THESE PLANS AND DRAWINGS MAY NOT BE REPRODUCED, ADAPTED OR FURTHER DISTRIBUTED, AND NO BUILDINGS MAY BE CONSTRUCTED FROM THESE PLANS, WITHOUT THE WRITTEN PERMISSION OF ROMTEC, INC.

PSE Consulting Engineers, Inc.
www.structure1.com
Klamath Falls Office
250 Main Klamath Falls, Oregon 97603
Phone: (541) 850-6300 Fax: (541) 850-6233
info@structure1.com
ROMTEC 220-57

ROMTEC
18240 NORTH BANK ROAD
ROSEBURG, OR 97470
(541)-496-3541 FAX (541)-496-0803

PROJECT: 1015 ASPEN
DIAMOND HILL PARK
CUMBERLAND, RHODE ISLAND

SHEET TITLE: WINDOW SCHEDULE

PLAN SET# DHP01

DATE: 07/02/2020

REVISIONS

REV.	DATE:	BY

DRAWN BY: TY

SHEET NO. A6.1

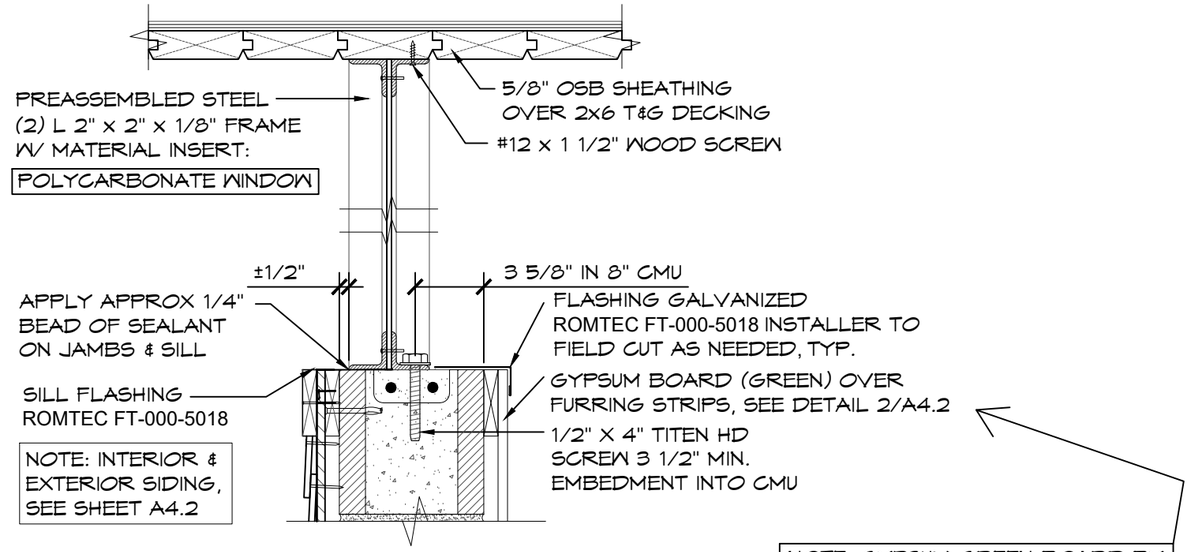

NOTE: GYPSUM GREEN BOARD BY INSTALLER. ATTACH DRYWALL TO WOOD FURRING STRIPS W/ 1 1/4" DRYWALL SCREWS, BY INSTALLER.

1 SECTION VIEW (SIDE)

SCALE: 1 1/2" = 1'-0"

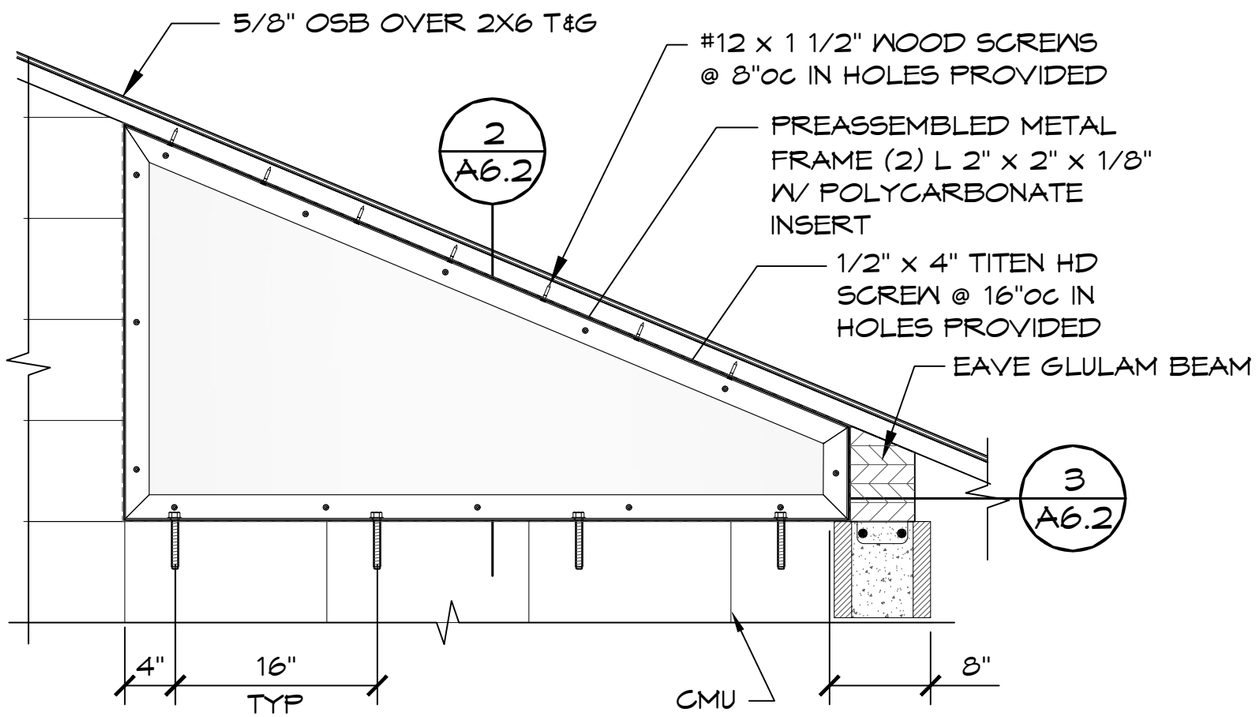

1 WINDOW DETAIL

SCALE: 1" = 1'-0"

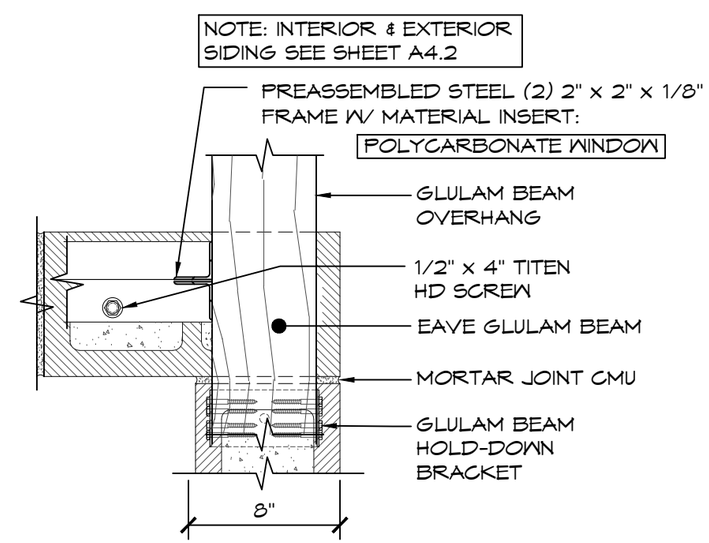

2 SECTION VIEW (TOP)

SCALE: 1 1/2" = 1'-0"

08/24/2020

CERTIFIED MASTER KITCHEN & BATH DESIGNER
CMKBD
Cassandra Ruport
ID #1063772
NKBA
Cassandra Ruport
EXPIRES: 01/01/2021

Structural members only were included in this structural review/design by PSE. Non-structural items are NOT included.

© 2020 ROMTEC, INC. ALL RIGHTS RESERVED. THESE PLANS AND DRAWINGS MAY NOT BE REPRODUCED, ADAPTED OR FURTHER DISTRIBUTED, AND NO BUILDINGS MAY BE CONSTRUCTED FROM THESE PLANS, WITHOUT THE WRITTEN PERMISSION OF ROMTEC, INC.

PSE Consulting Engineers, Inc.
www.structure1.com
Klamath Falls Office
250 Main Klamath Falls, Oregon 97603
Phone: (541) 850-6300 Fax: (541) 850-6233
info@structure1.com
ROMTEC 220-57

ROMTEC
18240 NORTH BANK ROAD
ROSEBURG, OR 97470
(541)-496-3541 FAX (541)-496-0803

PROJECT: 1015 ASPEN
DIAMOND HILL PARK
CUMBERLAND, RHODE ISLAND

SHEET TITLE: GABLE VENT DETAIL

PLAN SET# DHP01

DATE: 07/02/2020

REVISIONS

REV.	DATE:	BY
2	7/27/2020	TY

DRAWN BY: TY

SHEET NO. A6.2

WOOD FILLER WALL SCHEDULE

SYM	SIZE	FRAME	SLOPE	REMARKS	SHEET
1	57 3/8" x 31 1/2" x 7 5/8"	2x DF WOOD	5:12	OPPOSITE AS SHOWN	SEE SHEET A6.4
2	57 3/8" x 31 1/2" x 7 5/8"	2x DF WOOD	5:12	AS SHOWN	SEE SHEET A6.4

HARDWARE

QTYS PER WALL SECTION:

4 1/2" x 5" TITEN HD SCREW
4 #12 x 3" WOOD SCREWS

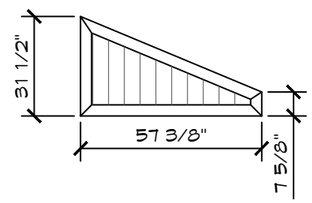

08/24/2020

CERTIFIED MASTER KITCHEN & BATH DESIGNER
CMKBD
Cassandra Ruport
ID #1063772
NKBA
Cassandra Ruport

EXPIRES: 01/01/2021

Structural members only were included in this structural review/design by PSE. Non-structural items are NOT included.

© 2020 ROMTEC, INC. ALL RIGHTS RESERVED. THESE PLANS AND DRAWINGS MAY NOT BE REPRODUCED, ADAPTED OR FURTHER DISTRIBUTED, AND NO BUILDINGS MAY BE CONSTRUCTED FROM THESE PLANS, WITHOUT THE WRITTEN PERMISSION OF ROMTEC, INC.

PSE Consulting Engineers, Inc.
www.structure1.com
Klamath Falls Office
250 Main Klamath Falls, Oregon 97603
Phone: (541) 850-6300 Fax: (541) 850-6233
info@structure1.com
ROMTEC 220-57

ROMTEC
18240 NORTH BANK ROAD
ROSEBURG, OR 97470
(541)-496-3541 FAX (541)-496-0803

PROJECT: 1015 ASPEN
DIAMOND HILL PARK
CUMBERLAND, RHODE ISLAND

SHEET TITLE: GABLE VENT DETAIL

PLAN SET# DHP01

DATE: 07/02/2020

REVISIONS

REV.	DATE:	BY

DRAWN BY: TY

SHEET NO. A6.3

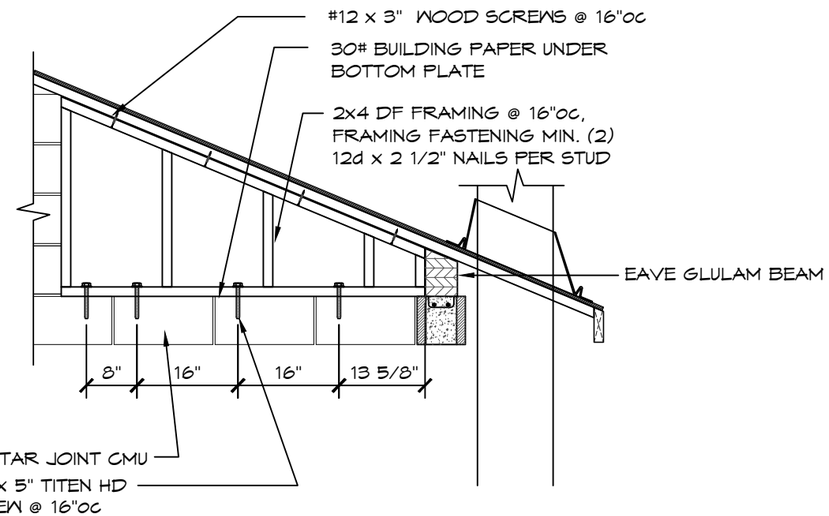

FILLER WALL FRAMING

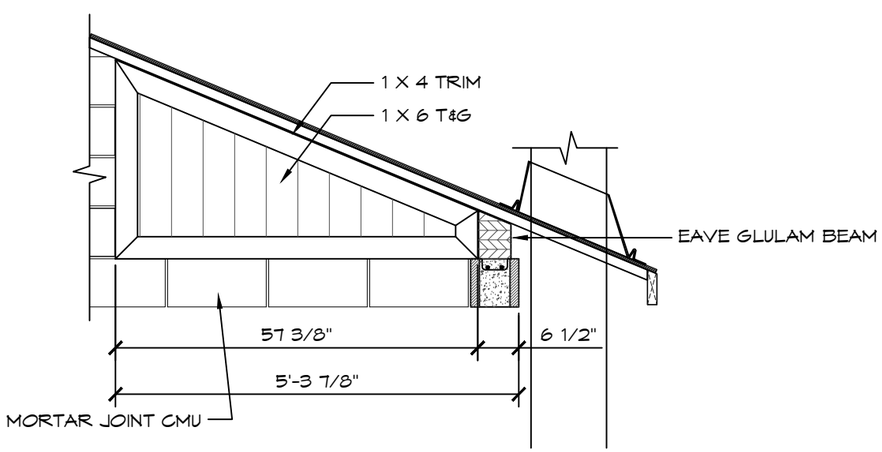

FINISH - T&G / TRIM

1 FILLER WALL FRAMING & FINISH DETAIL

SCALE: 1/2" = 1'-0"

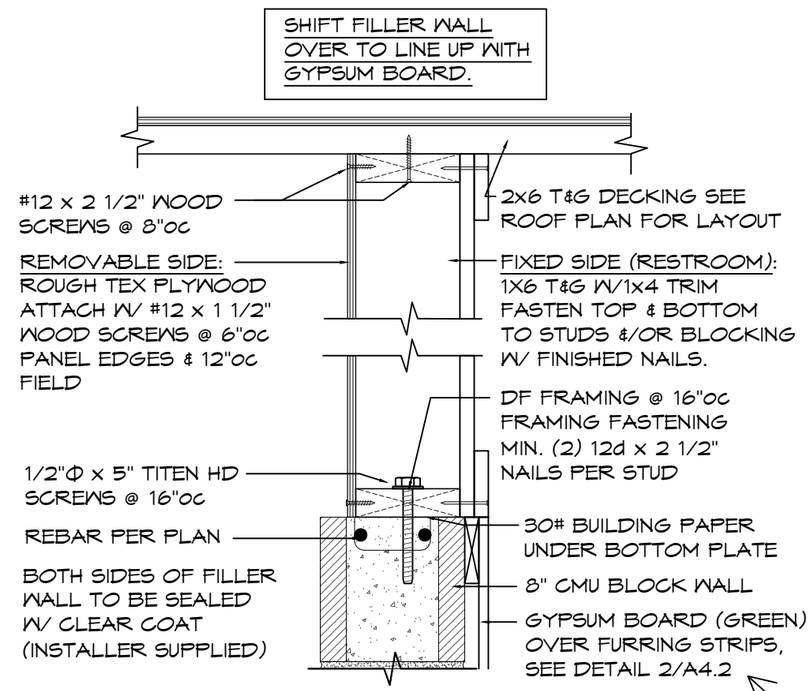

2 WOOD FILLER WALL SECTION

SCALE: 1 1/2" = 1'-0"

NOTE: GYPSUM GREEN BOARD BY INSTALLER. ATTACH DRYWALL TO WOOD FURRING STRIPS W/ 1 1/4" DRYWALL SCREWS, BY INSTALLER.

08/24/2020
CERTIFIED MASTER KITCHEN & BATH DESIGNER
CMKBD
Cassandra Ruport
ID #1063772
NKBA
Cassandra Ruport
EXPIRES: 01/01/2021

Structural members only were included in this structural review/design by PSE. Non-structural items are NOT included

© 2020 ROMTEC, INC. ALL RIGHTS RESERVED. THESE PLANS AND DRAWINGS MAY NOT BE REPRODUCED, ADAPTED OR FURTHER DISTRIBUTED, AND NO BUILDINGS MAY BE CONSTRUCTED FROM THESE PLANS, WITHOUT THE WRITTEN PERMISSION OF ROMTEC, INC.

PSE Consulting Engineers, Inc.
Structural Engineers
Klamath Falls Office
250 Main Klamath Falls, Oregon 97603
Phone: (541) 850-6300 Fax: (541) 850-6233
info@structure1.com
ROMTEC 220-57

ROMTEC
18240 NORTH BANK ROAD
ROSEBURG, OR 97470
(541)-496-3541 FAX (541)-496-0803

PROJECT: 1015 ASPEN
DIAMOND HILL PARK
CUMBERLAND, RHODE ISLAND

SHEET TITLE: GABLE VENT DETAIL

PLAN SET# DHP01

DATE: 07/02/2020

REVISIONS

REV.	DATE:	BY
2	7/27/2020	TY

DRAWN BY: TY

SHEET NO. A6.4

8-25-2020

NABIL TAHA
No. 11188
REGISTERED PROFESSIONAL ENGINEER CIVIL & STRUCTURAL
Ex 6-30-21

EXPOSED AGGREGATE CONCRETE PAVEMENT PER PLANS BY BETA-Inc. SHEET L6.0 (SEPARATE POUR BY INSTALLER)

FINISH SLAB WITH A WATER BASED CONCRETE SEALER (PROVIDED BY INSTALLER)

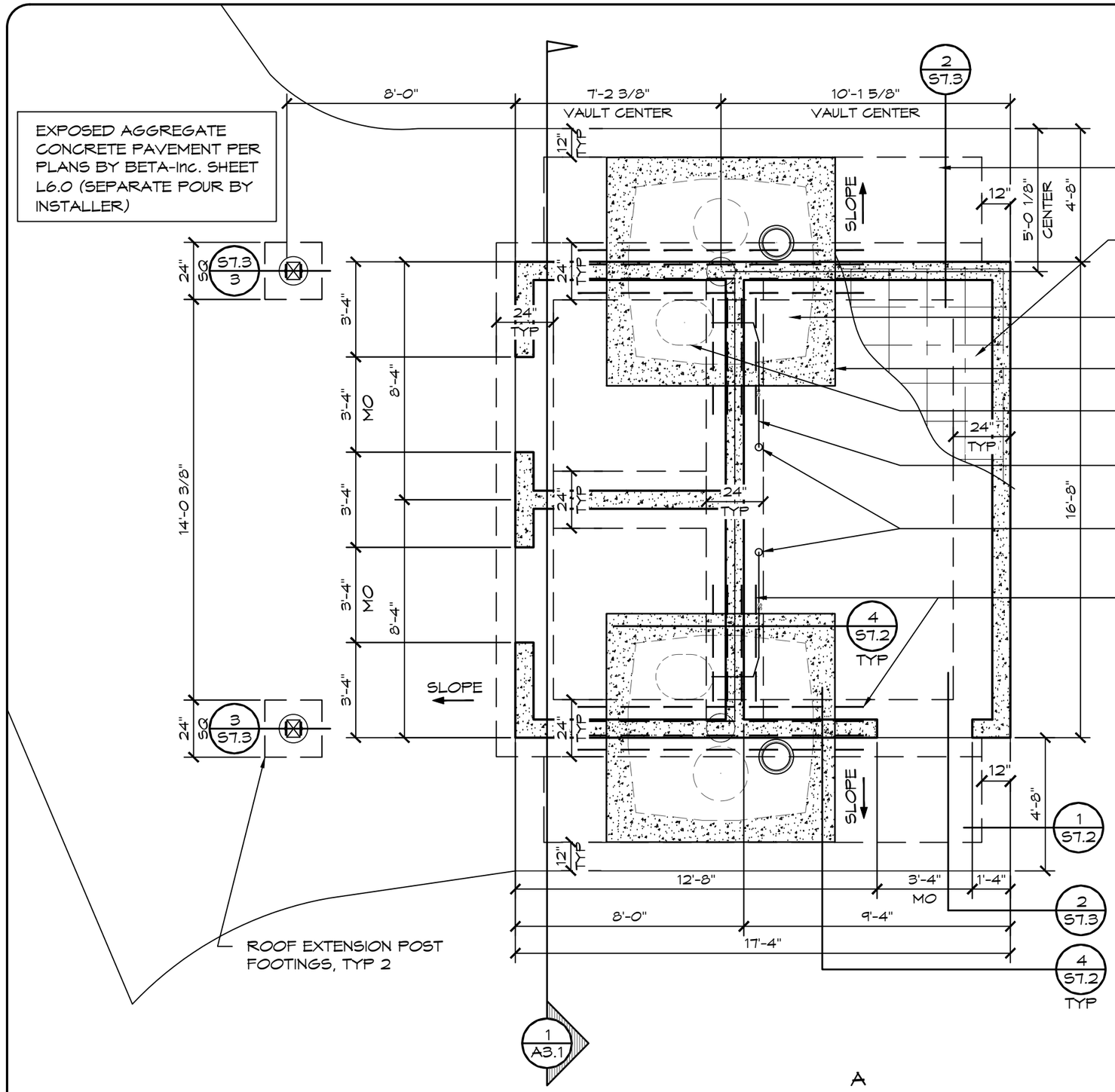

CONCRETE WALK BY INSTALLER

6" CONC SLAB W/ #5 REBAR @ 16" OC EW OVER 6" ENGINEERED FILL

1000 GALLON POLYETHYLENE VAULT, TYP.

BACKFILL AROUND VAULT, SEE SHEET S7.4

RISER (SEE DETAIL 1/S7.3)

1 1/4" DRAIN PIPE IN SLAB FROM VENT PIPE TO DRAIN SINK INTO BACK SIDE OF TOILET RISER. EACH SIDE.

VENT PIPE DIRECTLY BEHIND SINK. TYP. (2) SEE SHEET P2

(4) #5 REBAR CONTINUOUS ACROSS TOP OF VAULT, SEE DETAIL 4/S7.2

RECYCLE

RECYCLE ALL USED SHIPPING MATERIALS AND LEFT OVER BUILDING MATERIALS

FINISH SLAB WITH A WATER BASED CONCRETE SEALER (PROVIDED BY INSTALLER)

NOTES:

1. FINISH FLOOR SLOPE IS 2% (1/4" PER FT) MAX & 1% (1/8" PER FT) MIN
2. VERIFY SIDEWALKS W/ OWNER
3. PROVIDE BLOCK-OUTS FOR PLUMBING, MECHANICAL, & ELECTRICAL AS REQD. CO-ORDINATE W/ SUBS.
4. REBAR MIN. BEND SHALL BE NOT LESS THAN 6db INSIDE DIA. AS PER TMS 402-16 SECTION 6.1.8.2.
5. SAW JOINTS BY CONTRACTOR. SLAB APPEARANCE IS A PRIORITY. LOCATE JOINTS AT 10' O.C. MAX. SEE 3/S7.3.
6. MAXIMUM SLOPE OF EXCAVATION MAY BE LIMITED BY LOCAL SOIL CONDITIONS. INCREASE DEPTH OF FORMED CONCRETE AS REQD.
7. CONCRETE SLAB BENEATH FLOOR MOUNTED FIXTURES IS TO BE GROUTED LEVEL AND SMOOTH.
8. UNDER FOOTINGS: 12" FILL COMPACTED TO 95% ASTM D 1557 TO MEET OR EXCEED ALLOWABLE BEAR PRESSURE ON SHEET G2.

1 FOUNDATION PLAN

SCALE: 1/4" = 1'-0"

A B C D

Structural members only were included in this structural review/design by PSE. Non-structural items are NOT included.

© 2020 ROMTEC, INC. ALL RIGHTS RESERVED. THESE PLANS AND DRAWINGS MAY NOT BE REPRODUCED, ADAPTED OR FURTHER DISTRIBUTED, AND NO BUILDINGS MAY BE CONSTRUCTED FROM THESE PLANS, WITHOUT THE WRITTEN PERMISSION OF ROMTEC, INC.

PSE Consulting Engineers, Inc.
www.structure1.com
Klamath Falls Office
250 Main Klamath Falls, Oregon 97603
Phone: (541) 850-6300 Fax: (541) 850-6233
info@structure1.com
ROMTEC 220-57

ROMTEC
18240 NORTH BANK ROAD
ROSEBURG, OR 97470
(541)-496-3541 FAX (541)-496-0803

PROJECT: 1015 ASPEN
DIAMOND HILL PARK
CUMBERLAND, RHODE ISLAND

SHEET TITLE: FOUNDATION PLAN

PLAN SET# DHP01

DATE: 07/02/2020

REVISIONS

REV.	DATE:	BY
1	7/09/2020	JRM
2	7/21/2020	TY
3	08/24/2020	TY

DRAWN BY: TY

SHEET NO. S7.1

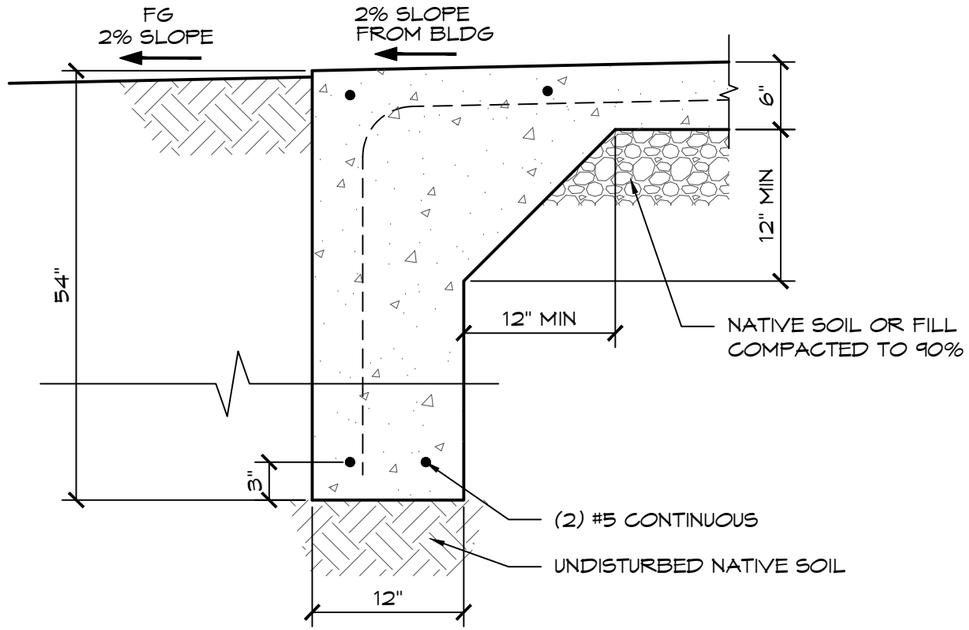

1 FOUNDATION DETAIL

SCALE: 1" = 1'-0"

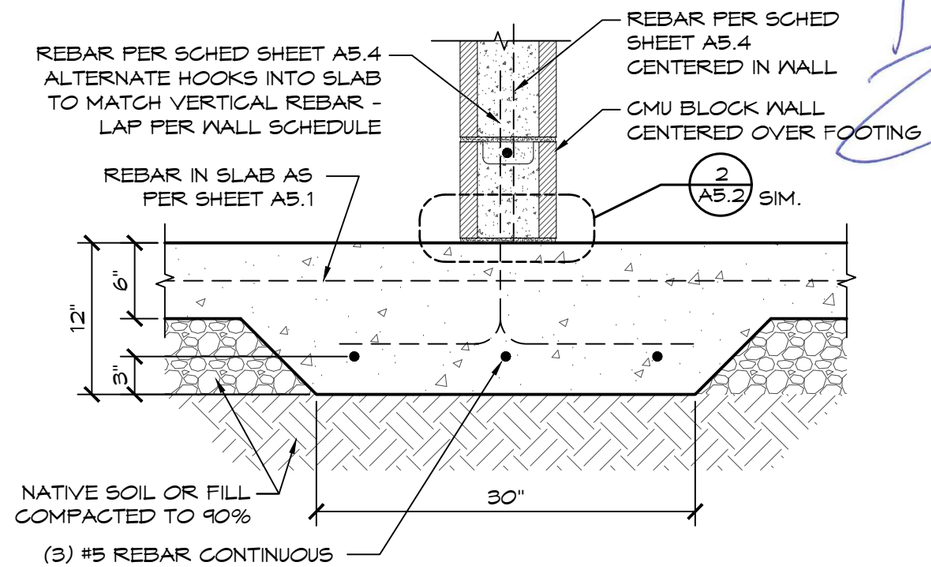

3 THICKENED SLAB AT WALLS

SCALE: 1" = 1'-0"

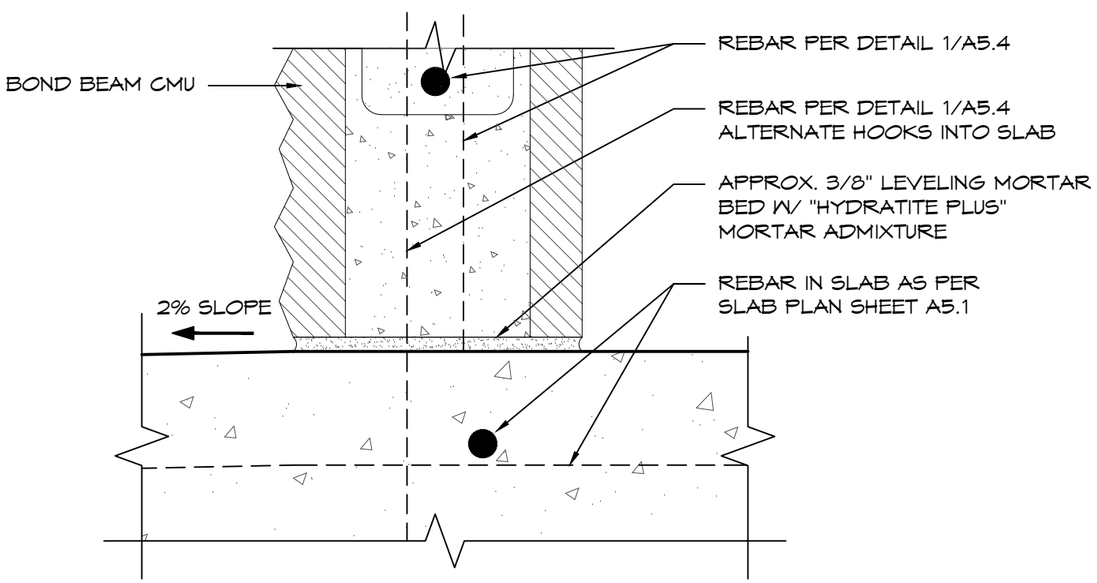

2 WALL-SLAB CONNECTION

SCALE: 3" = 1'-0"

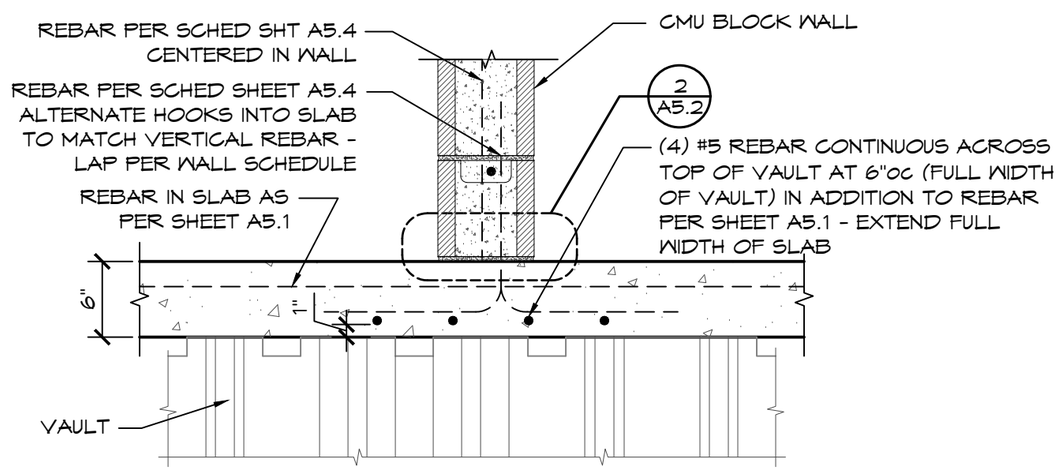

4 REBAR OVER VAULT

SCALE: 1" = 1'-0"

8-25-2020

NABIL TAHA
No. 11188
REGISTERED
PROFESSIONAL ENGINEER
CIVIL & STRUCTURAL
Ex 6-30-21

Structural members only were included in this structural review/design by PSE. Non-structural items are NOT included.

© 2020 ROMTEC, INC. ALL RIGHTS RESERVED. THESE PLANS AND DRAWINGS MAY NOT BE REPRODUCED, ADAPTED OR FURTHER DISTRIBUTED, AND NO BUILDINGS MAY BE CONSTRUCTED FROM THESE PLANS, WITHOUT THE WRITTEN PERMISSION OF ROMTEC, INC.

PSE Consulting Engineers, Inc.
www.structure1.com
Klamath Falls Office
250 Main Klamath Falls, Oregon 97603
Phone: (541) 850-6300 Fax: (541) 850-6233
info@structure1.com
ROMTEC 220-57

ROMTEC
18240 NORTH BANK ROAD
ROSEBURG, OR 97470
(541)-496-3541 FAX (541)-496-0803

PROJECT: 1015 ASPEN
DIAMOND HILL PARK
CUMBERLAND, RHODE ISLAND

SHEET TITLE: FOUNDATION OPTIONS

PLAN SET# DHP01

DATE: 07/02/2020

REVISIONS

REV.	DATE:	BY
1	7/09/2020	JRM

DRAWN BY: TY

SHEET NO. S7.2

8-25-2020

NABIL TAHA
No. 11188
REGISTERED PROFESSIONAL ENGINEER CIVIL & STRUCTURAL
Ex 6-30-21

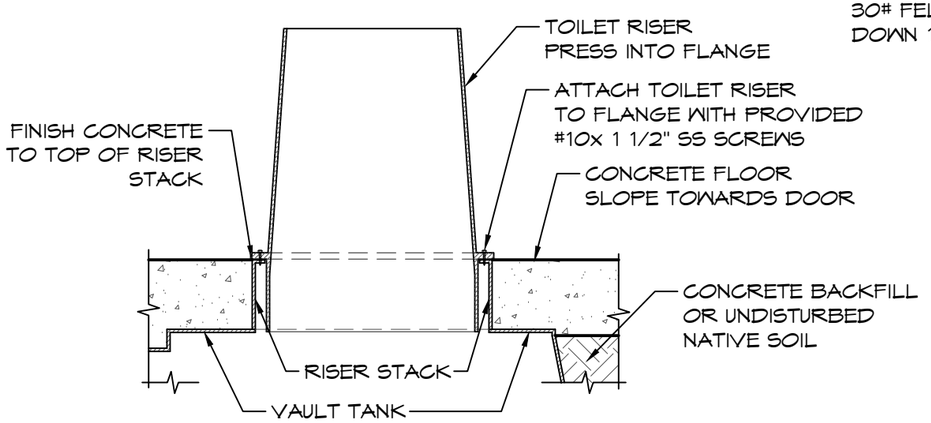

1 RISER/CONCRETE DETAIL

SCALE: 1" = 1'-0"

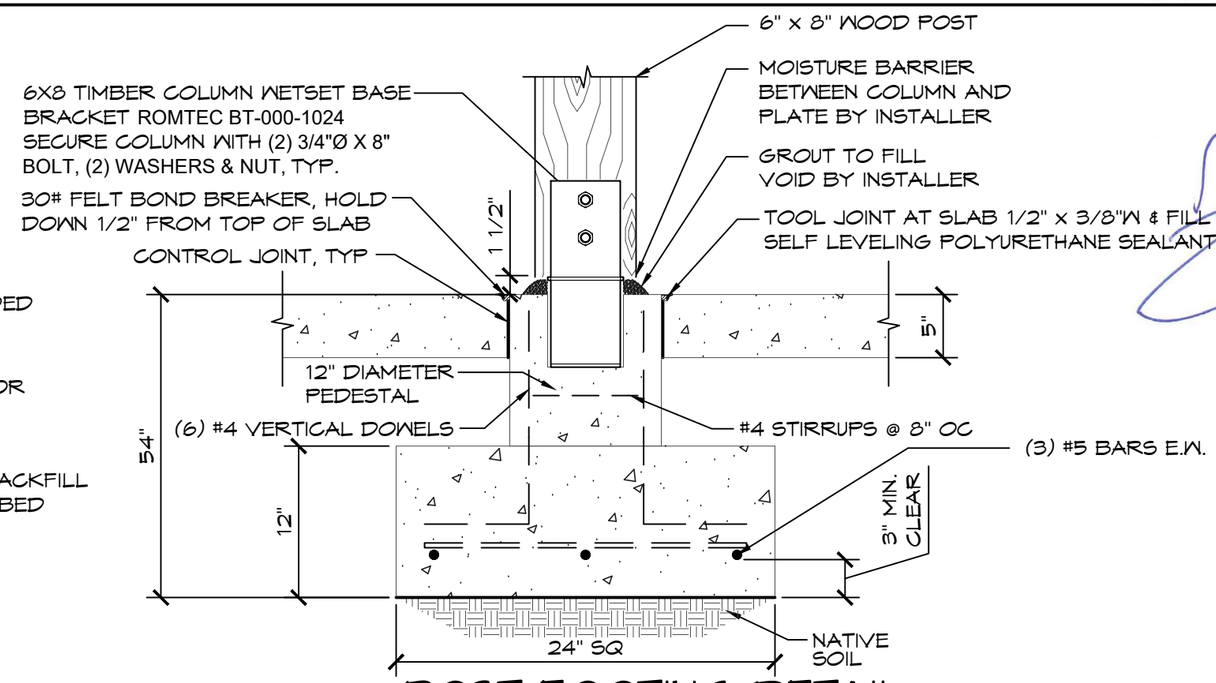

3 POST FOOTING DETAIL

SCALE: 1" = 1'-0"

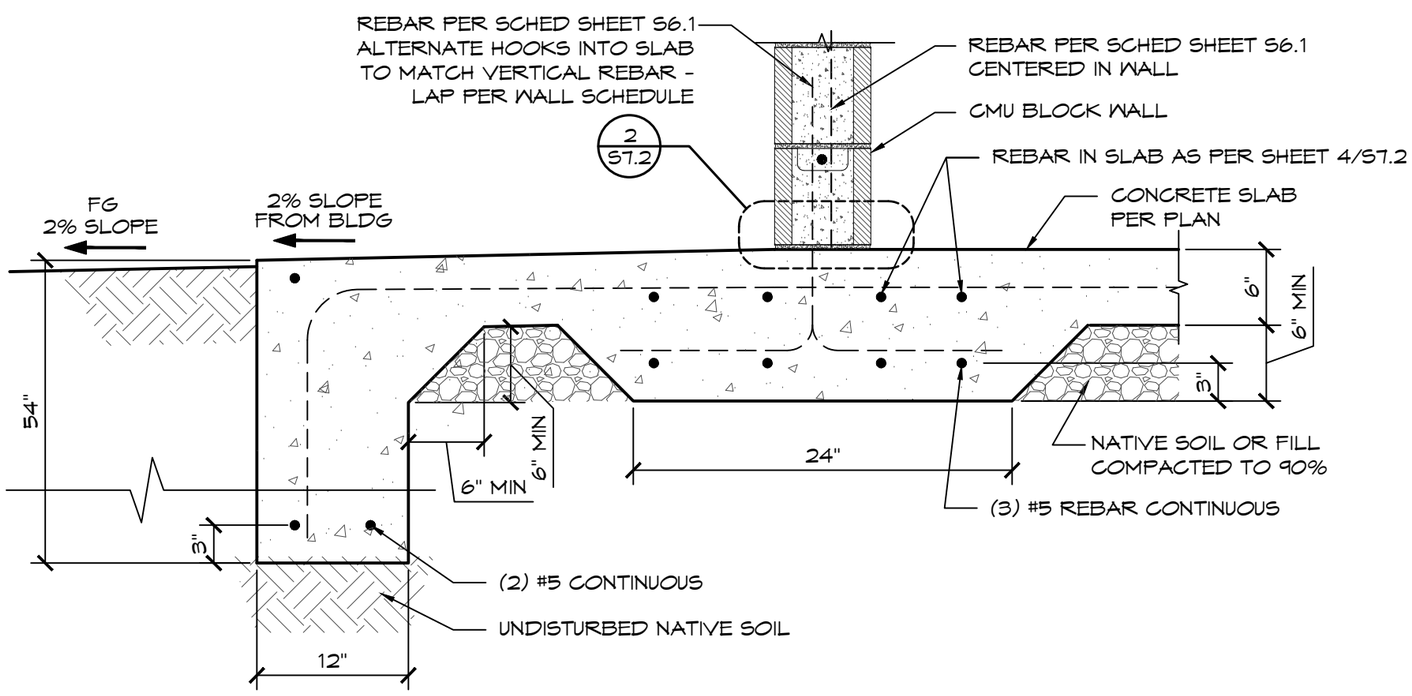

2 FOUNDATION & THICKENED SLAB DETAIL

SCALE: 1" = 1'-0"

Structural members only were included in this structural review/design by PSE. Non-structural items are NOT included.

© 2020 ROMTEC, INC. ALL RIGHTS RESERVED. THESE PLANS AND DRAWINGS MAY NOT BE REPRODUCED, ADAPTED OR FURTHER DISTRIBUTED, AND NO BUILDINGS MAY BE CONSTRUCTED FROM THESE PLANS, WITHOUT THE WRITTEN PERMISSION OF ROMTEC, INC.

PSE Consulting Engineers, Inc.
www.structure1.com
Klamath Falls Office
250 Main Klamath Falls, Oregon 97603
Phone: (541) 850-6300 Fax: (541) 850-6233
info@structure1.com
ROMTEC 220-57

ROMTEC
18240 NORTH BANK ROAD
ROSEBURG, OR 97470
(541)-496-3541 FAX (541)-496-0803

PROJECT: 1015 ASPEN
DIAMOND HILL PARK
CUMBERLAND, RHODE ISLAND

SHEET TITLE: FOUNDATION DETAILS

PLAN SET# DHP01

DATE: 07/02/2020

REVISIONS

REV.	DATE:	BY:
1	7/09/2020	JRM
2	7/27/2020	TY
3	08/24/2020	TY

DRAWN BY: TY

SHEET NO. S7.3

8-25-2020

NABIL TAHA
No. 11188
REGISTERED PROFESSIONAL ENGINEER CIVIL & STRUCTURAL
Ex. 6-30-21

Structural members only were included in this structural review/design by PSE. Non-structural items are NOT included.

VAULT INSTALLATION NOTES:

1) VAULT MUST BE INSPECTED FOR DAMAGE DURING SHIPPING BEFORE INSTALLATION.
2) VAULT HOLE MUST NOT BE OVERSIZED.
3) DO NOT DIG VAULT HOLE DEEPER THAN SHOWN. (ANY UN-COMPACTED FILL AT BOTTOM OF VAULT CAN COMPACT AND CAUSE DAMAGE TO VAULT)
4) DO NOT BUILD UP SOIL AROUND TOP OF VAULT TO MEET HEIGHT OF VAULT. IF THAT IS THE CASE THE DIFFERENCE MUST BE MADE UP WITH MAKING THE CONCRETE SLAB THICKER.
5) IF OVERSIZE HOLE REQUIRED FOR REMOVAL OF BOULDERS OR OTHER MATERIAL, HOLE MUST BE FILLED WITH CONCRETE.
6) BACKFILL W/ CONCRETE AROUND VAULT AREA IN 12" INCREMENTS AND CHECK TOILET RISER LEVEL AS BACKFILLING.

REQUIREMENT:
FILL VAULT 2/3 FULL WITH WATER BEFORE POURING CONCRETE BACKFILL

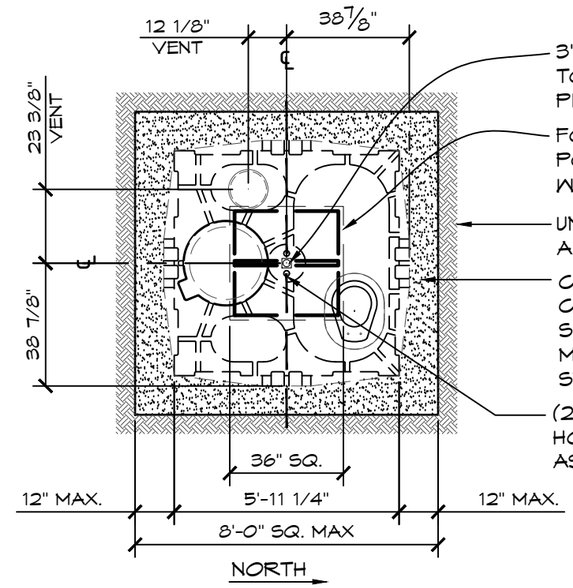

3"x3"x1/4"STEEL BASE PLATE WELDED TOP & BOTTOM OF 2" DIA. SCH 40 STEEL PIPE. PLACE PIPE WHEN BACKFILLING.

FOOTING FORM BOX POSITION 2x4 JOIST LENGTHWISE WITH TANK (AS SHOWN)

UNDISTURBED NATIVE SOIL ALL AROUND VAULT

CONCRETE BACKFILL 2500 PSI MINIMUM COMPRESSIVE STRENGTH AT 28 DAYS 4" +/- 1" SLUMP, WITH MAX 1" AGGREGATE, AND ALL MATERIALS IN ACCORDANCE WITH ACI 318 STANDARDS, SEE VAULT INSTALLATION NOTE 6.

(2) #4 REBAR, ACROSS TOP OF VAULT HOOK ENDS OVER CENTER PIER, AS SHOWN ON SLAB PLAN

ASSEMBLE FOOTING KIT AS SHOWN

- 8 PIECES OF PRECUT REBAR LAID IN CRISS CROSS PATTERN ON ROCKS IN MIDDLE OF FORM BOX
- EACH FOOTING FORM REQUIRES 1/3 CU. YD. OF READY MIX CONCRETE.
- 36" x 36" x 12" FORM BOX.
- REFER TO SHEET G1 GENERAL NOTE #5 FOR CAST IN PLACE CONCRETE REQUIREMENTS

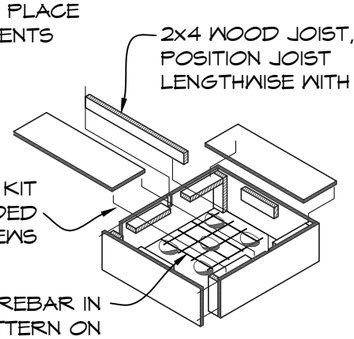

2x4 WOOD JOIST, POSITION JOIST LENGTHWISE WITH TANK

ASSEMBLY FOOTING KIT AS SHOWN, USE PROVIDED #10 x 1-1/4" WOOD SCREWS

PLACE (4) #4 REBAR IN CRISS-CROSS PATTERN ON ROCKS IN MIDDLE OF FORM BOX - MAX SLOPE = 1":20"

2 FOOTING FORM BOX

SCALE: 1/4" = 1'-0"

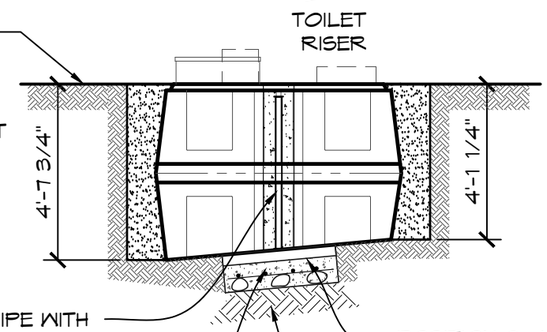

UNDISTURBED NATIVE SOIL FLUSH WITH TOP OF VAULT. DO NOT BUILD UP SOIL AROUND TOP OF VAULT TO MEET HEIGHT OF VAULT.

2" DIA. SCH 40 STEEL PIPE WITH 3"x3"x1/4"STEEL BASE PLATE FILL COLUMN WITH CONCRETE

PLACE (4) #4 REBAR IN CRISS-CROSS PATTERN ON ROCKS IN MIDDLE OF FORM BOX MAX SLOPE = 1":20"

POSITION 2x4 WOOD JOIST AS SHOWN (LENGTHWISE WITH TANK)

ALLOWABLE LOAD BEARING UNDISTURBED NATIVE SOIL VERIFY IN FIELD PRIOR TO CONSTRUCTION

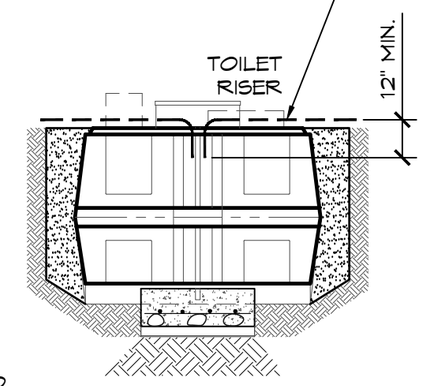

1 1000 GAL. VAULT INSTALLATION

SCALE: 1/4" = 1'-0"

© 2020 ROMTEC, INC. ALL RIGHTS RESERVED. THESE PLANS AND DRAWINGS MAY NOT BE REPRODUCED, ADAPTED OR FURTHER DISTRIBUTED, AND NO BUILDINGS MAY BE CONSTRUCTED FROM THESE PLANS, WITHOUT THE WRITTEN PERMISSION OF ROMTEC, INC.

PSE Consulting Engineers, Inc.
www.structure1.com
Klamath Falls Office
250 Main Street, Klamath Falls, Oregon 97603
Phone: (541) 850-5300 Fax: (541) 850-6233
info@structure1.com
ROMTEC 220-57

ROMTEC
18240 NORTH BANK ROAD
ROSEBURG, OR 97470
(541)-496-3541 FAX (541)-496-0803

PROJECT: 1015 ASPEN
DIAMOND HILL PARK
CUMBERLAND, RHODE ISLAND

SHEET TITLE: VAULT INSTALLATION DETAILS

PLAN SET# DHP01
DATE: 07/02/2020

REVISIONS

REV.	DATE:	BY
1	7/09/2020	JRM

DRAWN BY: TY

SHEET NO. S7.4

8-25-2020

NABIL TAHA
No. 11188
REGISTERED PROFESSIONAL ENGINEER CIVIL & STRUCTURAL
Ex 6-30-21

WALL TYPE SCHEDULE

8" REINFORCED CONCRETE MASONRY BLOCK WALL WITH MORTAR JOINTS, GROUTED SOLID ALL CELLS RUNNING BOND PATTERN.

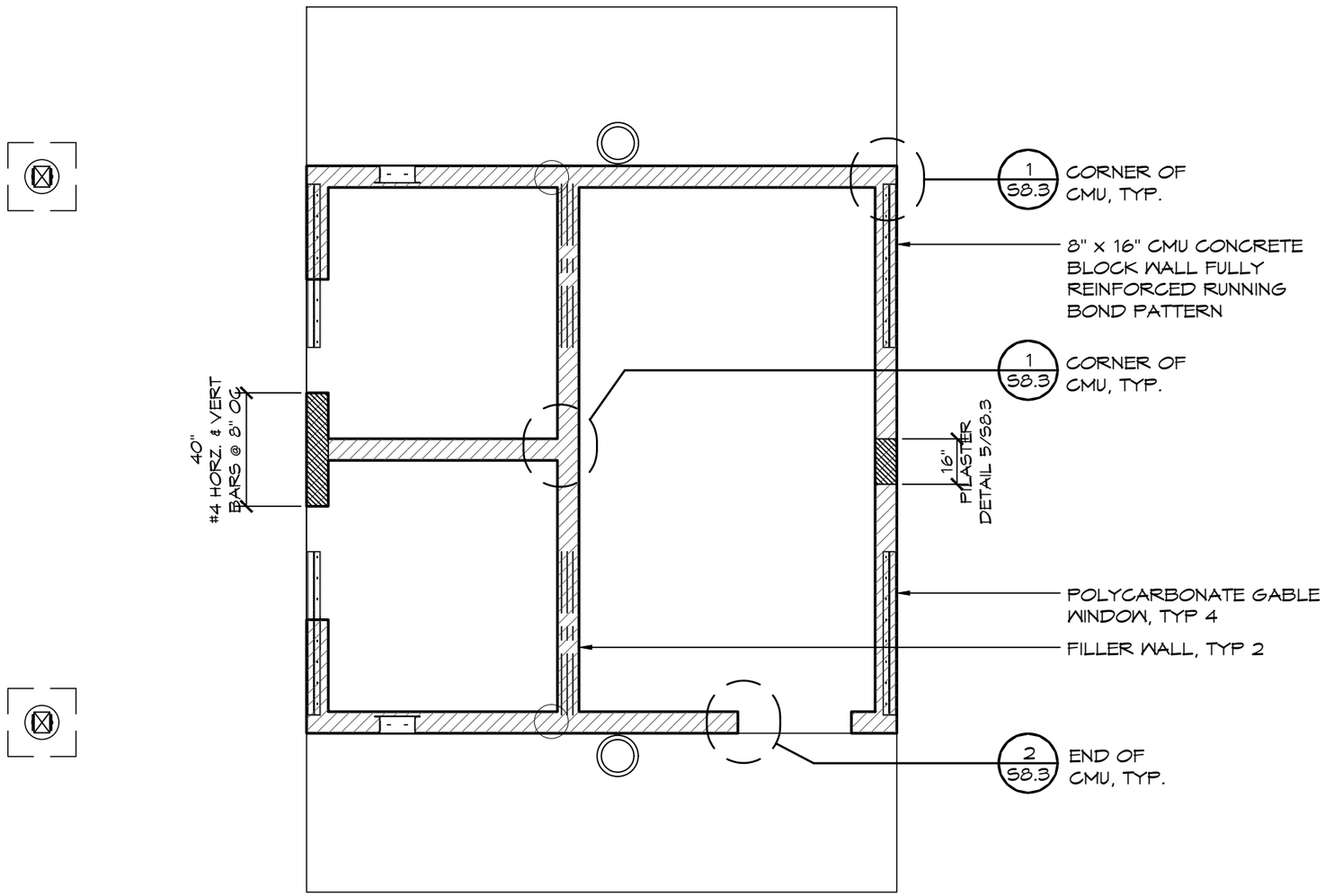

1 STRUCTURAL CMU PLAN

SCALE: 1/4" = 1'-0"

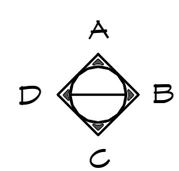

Structural members only were included in this structural review/design by PSE. Non-structural items are NOT included.

© 2020 ROMTEC, INC. ALL RIGHTS RESERVED. THESE PLANS AND DRAWINGS MAY NOT BE REPRODUCED, ADAPTED OR FURTHER DISTRIBUTED, AND NO BUILDINGS MAY BE CONSTRUCTED FROM THESE PLANS, WITHOUT THE WRITTEN PERMISSION OF ROMTEC, INC.

PSE Consulting Engineers, Inc.
www.structure1.com
Klamath Falls Office
250 Main Street, Klamath Falls, Oregon 97603
Phone: (541) 850-6300 Fax: (541) 850-6233
info@structure1.com
ROMTEC 220-57

ROMTEC
18240 NORTH BANK ROAD
ROSEBURG, OR 97470
(541)-496-3541 FAX (541)-496-0803

PROJECT: 1015 ASPEN
DIAMOND HILL PARK
CUMBERLAND, RHODE ISLAND

SHEET TITLE: STRUCTURAL CMU PLAN

PLAN SET# DHP01

DATE: 07/02/2020

REVISIONS

REV.	DATE:	BY
2	7/27/2020	TY
3	08/24/2020	TY

DRAWN BY: TY

SHEET NO. S8.1

8-25-2020

NABIL TAHA
No. 11188
REGISTERED PROFESSIONAL ENGINEER CIVIL & STRUCTURAL
Ex 6-30-21

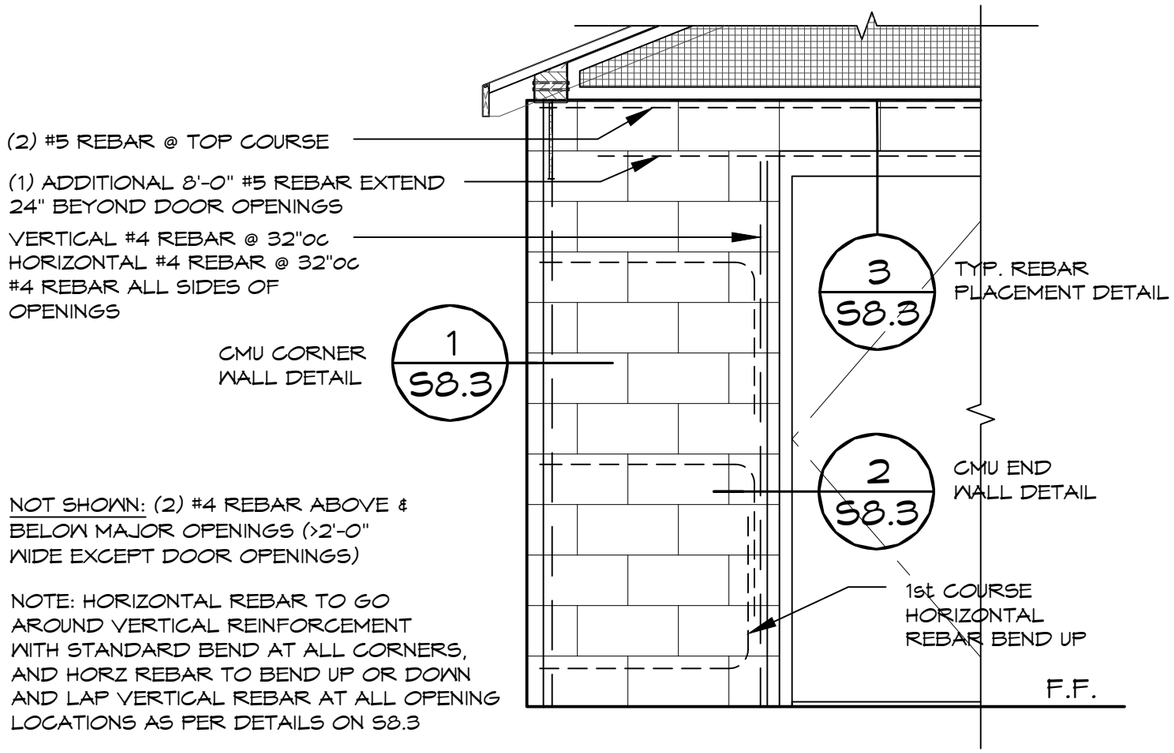

NOT SHOWN: (2) #4 REBAR ABOVE & BELOW MAJOR OPENINGS (>2'-0" WIDE EXCEPT DOOR OPENINGS)

NOTE: HORIZONTAL REBAR TO GO AROUND VERTICAL REINFORCEMENT WITH STANDARD BEND AT ALL CORNERS, AND HORZ REBAR TO BEND UP OR DOWN AND LAP VERTICAL REBAR AT ALL OPENING LOCATIONS AS PER DETAILS ON S8.3

1 CMU REBAR LAYOUT DETAIL

SCALE: 1/2" = 1'-0"

CMU REBAR SCHEDULE		
REBAR	MIN. LAP	BEND DIAMETER
#4	24"	3" MIN.
#5	30"	3-3/4" MIN.

CMU REBAR NOTES:
- BENDS: MIN. INSIDE BEND DIAMETER SHALL BE NOT LESS THAN 6d AS PER TMS 402-16 SECTION 6.1.8.2
- SPLICES: LAP SPLICES ARE PERMITTED AS PER TMS 402-16 SECTION 6.1.6.1.1

PIPES INSTALLED THROUGH CMU WALL NOTES:
- SUPPLY: THE FIXTURE SUPPLY LINE SHOULD BE BORED A 1/2" LARGER THAN REQUIRED LINE SIZE AND THE PORTION OF PIPE LOCATED IN CMU WALL SHALL BE WRAPPED WITH 10MIL BLACK TAPE
- WASTE PIPE: THE FIXTURE WASTE LINE SHOULD BE BORED A 1/2" LARGER THAN REQUIRED LINE SIZE.

Structural members only were included in this structural review/design by PSE. Non-structural items are NOT included.

© 2020 ROMTEC, INC. ALL RIGHTS RESERVED. THESE PLANS AND DRAWINGS MAY NOT BE REPRODUCED, ADAPTED OR FURTHER DISTRIBUTED, AND NO BUILDINGS MAY BE CONSTRUCTED FROM THESE PLANS, WITHOUT THE WRITTEN PERMISSION OF ROMTEC, INC.

PSE Consulting Engineers, Inc.
www.structure1.com
Klamath Falls Office
250 Main Klamath Falls, Oregon 97603
Phone: (541) 850-6300 Fax: (541) 850-6233
info@structure1.com
ROMTEC 220-57

ROMTEC
18240 NORTH BANK ROAD
ROSEBURG, OR 97470
(541)-496-3541 FAX (541)-496-0803

PROJECT: 1015 ASPEN
DIAMOND HILL PARK
CUMBERLAND, RHODE ISLAND

SHEET TITLE: CMU REBAR LAYOUT DETAIL

PLAN SET# DHP01

DATE: 07/02/2020

REVISIONS

REV.	DATE:	BY
1	7/09/2020	JRM

DRAWN BY: TY

SHEET NO. S8.2

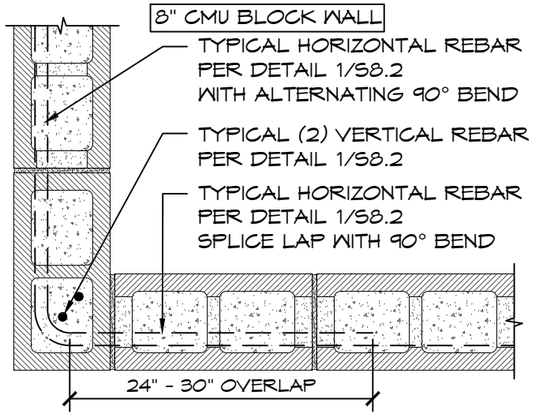

1 MORTAR JOINT CMU CORNER DETAIL

SCALE: 1" = 1'-0"

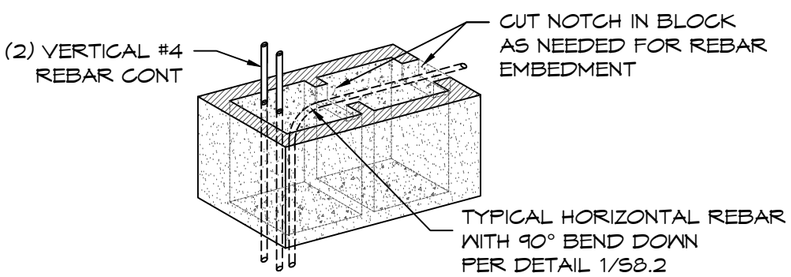

2 MORTAR JOINT CMU WALL END DETAIL

SCALE: 1" = 1'-0"

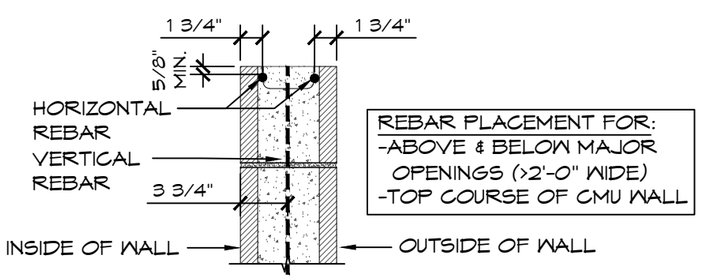

NOTE: REBAR INSTALLED AS PER TMS 402-13/ACI 530-13/ASCE 5-13 SECTION 1.18

3 8" CMU REBAR PLACEMENT

SCALE: 1" = 1'-0"

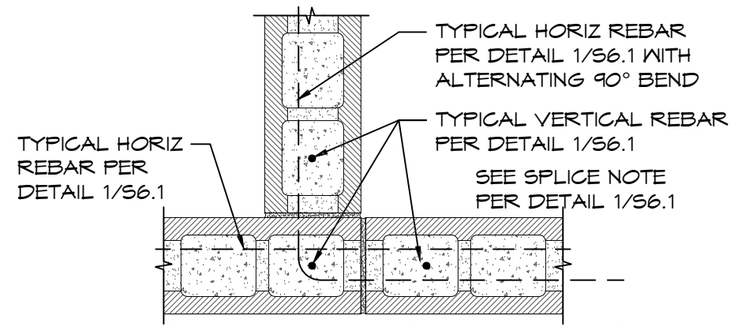

4 8" TO 8" MORTAR JOINT CMU INTERSECTION DETAIL

SCALE: 1" = 1'-0"

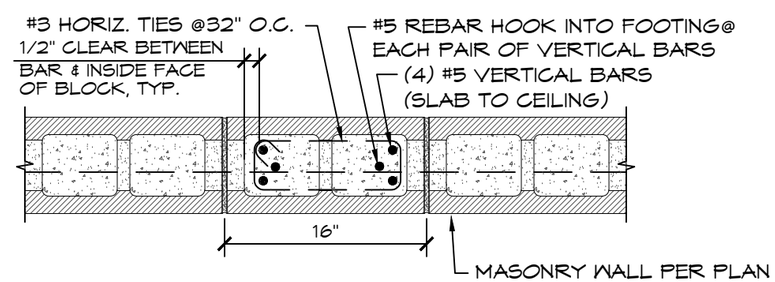

5 MASONRY PILASTER DETAIL

SCALE: 1" = 1" - 0"

8-25-2020

NABIL TAHA
No. 11188
REGISTERED
PROFESSIONAL ENGINEER
CIVIL & STRUCTURAL

Ex 6-30-21

Structural members only were included in this structural review/design by PSE. Non-structural items are NOT included.

© 2020 ROMTEC, INC. ALL RIGHTS RESERVED. THESE PLANS AND DRAWINGS MAY NOT BE REPRODUCED, ADAPTED OR FURTHER DISTRIBUTED, AND NO BUILDINGS MAY BE CONSTRUCTED FROM THESE PLANS, WITHOUT THE WRITTEN PERMISSION OF ROMTEC, INC.

PSE Consulting Engineers, Inc.
www.structure1.com
Klamath Falls Office
250 Main Klamath Falls, Oregon 97603
Phone: (541) 850-6300 Fax: (541) 850-6233
info@structure1.com
ROMTEC 220-57

ROMTEC
18240 NORTH BANK ROAD
ROSEBURG, OR 97470
(541)-496-3541 FAX (541)-496-0803

PROJECT: 1015 ASPEN
DIAMOND HILL PARK
CUMBERLAND, RHODE ISLAND

SHEET TITLE: STRUCTURAL DETAILS

PLAN SET# DHP01

DATE: 07/02/2020

REVISIONS

REV.	DATE:	BY
1	7/09/2020	JRM

DRAWN BY: TY

SHEET NO. S8.3

8-25-2020

NABIL TAHA
No. 11188
REGISTERED PROFESSIONAL ENGINEER CIVIL & STRUCTURAL
Ex 6-30-21

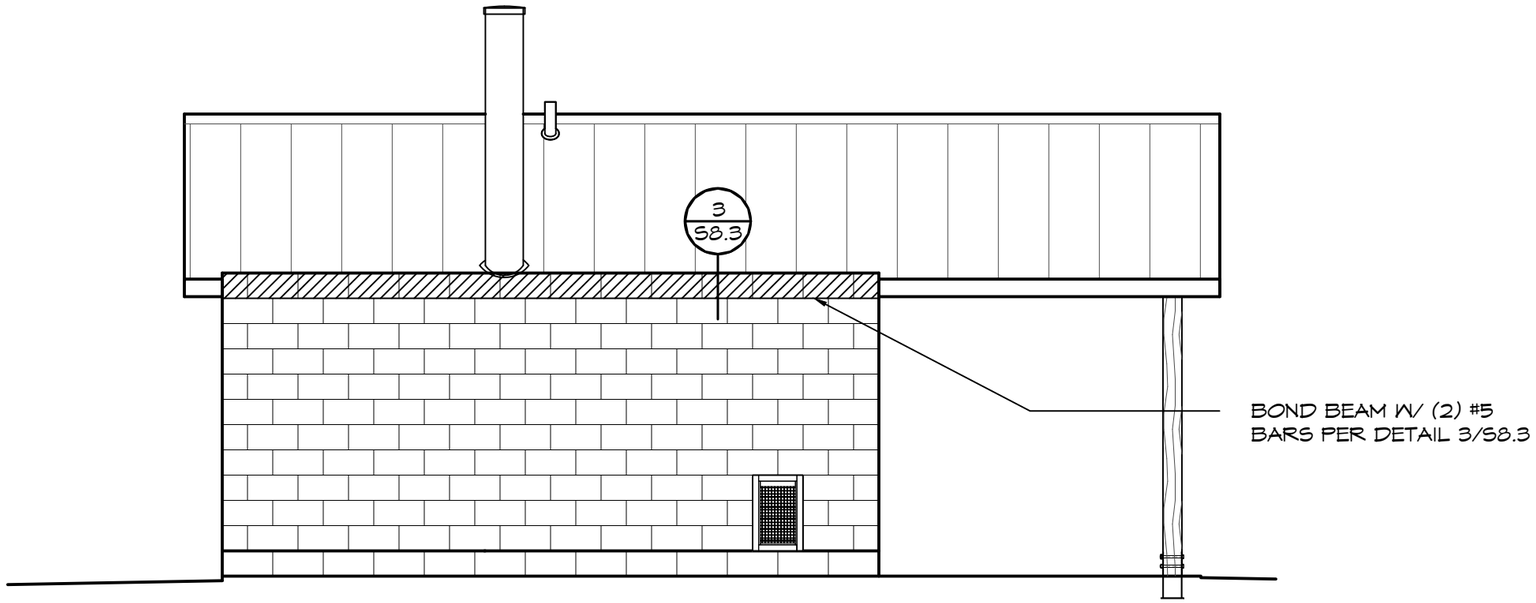

A CMU ELEVATION VIEW

SCALE: 1/4" = 1'-0"

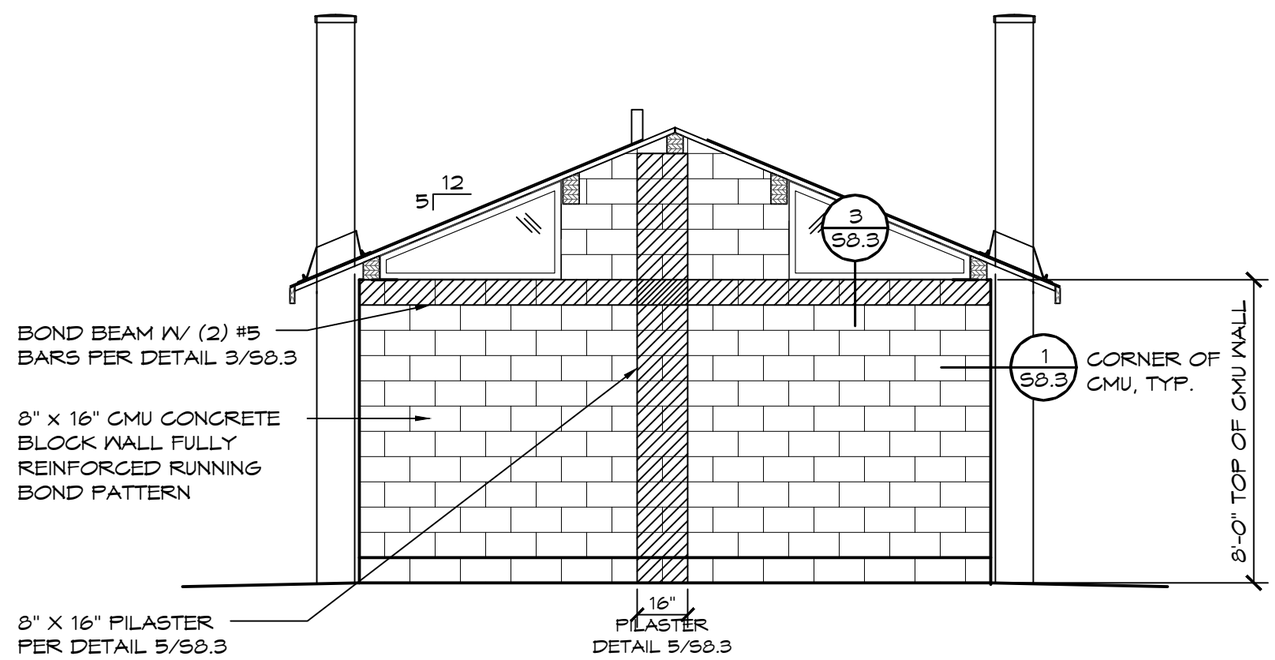

B CMU ELEVATION VIEW

SCALE: 1/4" = 1'-0"

Structural members only were included in this structural review/design by PSE. Non-structural items are NOT included.

© 2020 ROMTEC, INC. ALL RIGHTS RESERVED. THESE PLANS AND DRAWINGS MAY NOT BE REPRODUCED, ADAPTED OR FURTHER DISTRIBUTED, AND NO BUILDINGS MAY BE CONSTRUCTED FROM THESE PLANS, WITHOUT THE WRITTEN PERMISSION OF ROMTEC, INC.

PSE Consulting Engineers, Inc.
www.structure1.com
Klamath Falls Office
250 Main Klamath Falls, Oregon 97603
Phone: (541) 850-6300 Fax: (541) 850-6233
info@structure1.com
ROMTEC 220-57

ROMTEC
18240 NORTH BANK ROAD
ROSEBURG, OR 97470
(541)-496-3541 FAX (541)-496-0803

PROJECT: 1015 ASPEN
DIAMOND HILL PARK
CUMBERLAND, RHODE ISLAND

SHEET TITLE: STRUCTURAL CMU ELEVATIONS

PLAN SET# DHP01

DATE: 07/02/2020

REVISIONS

REV.	DATE:	BY:
1	7/09/2020	JRM

DRAWN BY: TY

SHEET NO. S8.4

8-25-2020

NABIL TAHA
No. 11188
REGISTERED
PROFESSIONAL ENGINEER
CIVIL & STRUCTURAL
Ex 6-30-21

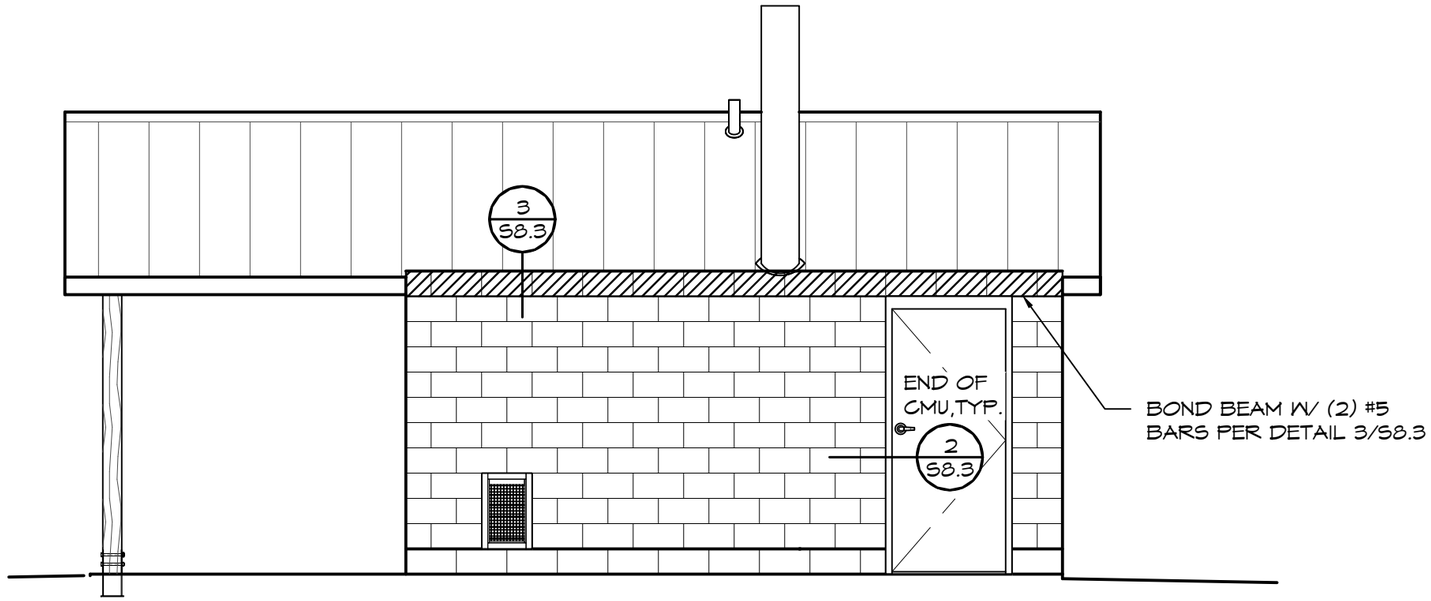

C CMU ELEVATION VIEW

SCALE: 1/4" = 1'-0"

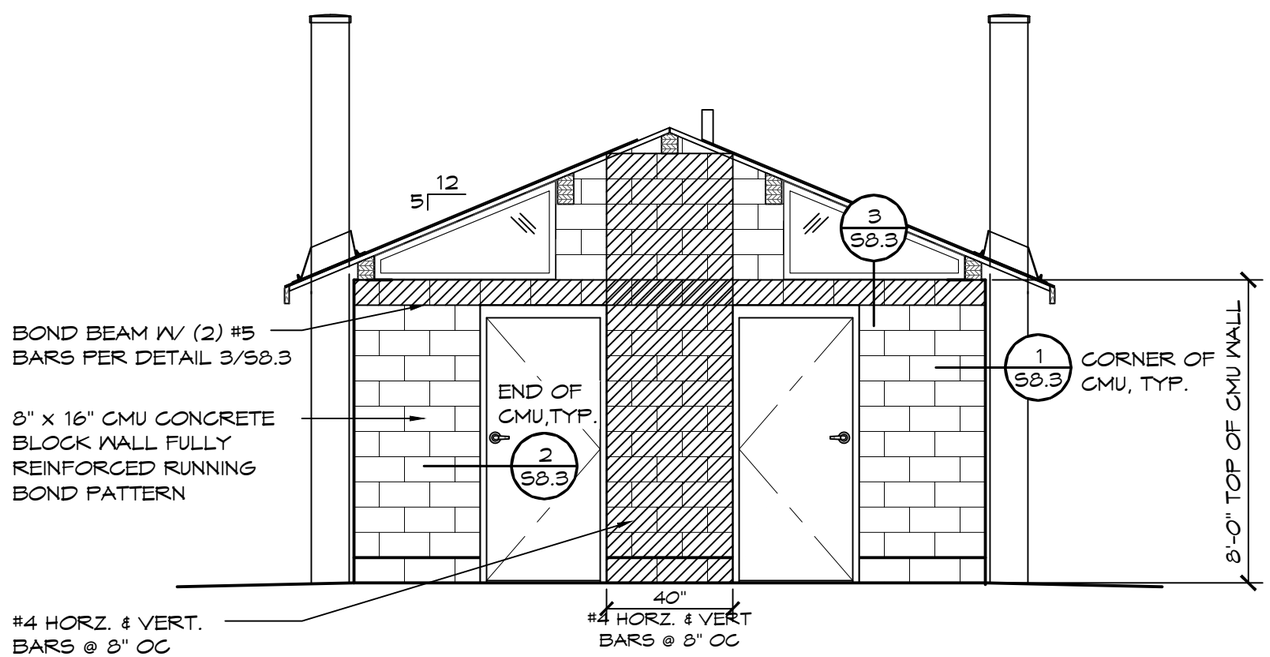

D CMU ELEVATION VIEW

SCALE: 1/4" = 1'-0"

Structural members only were included in this structural review/design by PSE. Non-structural items are NOT included.

© 2020 ROMTEC, INC. ALL RIGHTS RESERVED. THESE PLANS AND DRAWINGS MAY NOT BE REPRODUCED, ADAPTED OR FURTHER DISTRIBUTED, AND NO BUILDINGS MAY BE CONSTRUCTED FROM THESE PLANS, WITHOUT THE WRITTEN PERMISSION OF ROMTEC, INC.

PSE Consulting Engineers, Inc.
www.structure1.com
Klamath Falls Office
250 Main Klamath Falls, Oregon 97603
Phone: (541) 850-6300 Fax: (541) 850-6233
info@structure1.com
ROMTEC 220-57

ROMTEC
18240 NORTH BANK ROAD
ROSEBURG, OR 97470
(541)-496-3541 FAX (541)-496-0803

PROJECT: 1015 ASPEN
DIAMOND HILL PARK
CUMBERLAND, RHODE ISLAND

SHEET TITLE: STRUCTURAL CMU ELEVATIONS

PLAN SET# DHP01

DATE: 07/02/2020

REVISIONS

REV.	DATE:	BY:
1	7/09/2020	JRM

DRAWN BY: TY

SHEET NO. S8.5

2x6 V-EDGE TONGUE & GROOVE DECKING:
NAIL DECK BOARD TO GLULAM BEAMS W/ 10d x 3" NAILS (2) PER 2x6 DECK BOARD.
5/8" OSB SHEATHING:
ATTACH OSB TO DECKING W/ 6d (2"x 0.113") NAILS OR MIN 7/16" x 1 1/4" STAPLES @ 6"OC EDGE & 12"OC FIELD
NOTE:
INSTALLER TO CALIBRATE NAIL GUN TO ENSURE NAILS DO NOT SHINE THROUGH T&G)

NOTES:

1. TWO-INCH (51 MM) DECKING SHALL HAVE A MAXIMUM MOISTURE CONTENT OF 15 PERCENT. DECKING SHALL BE MACHINED WITH A SINGLE TONGUE-AND-GROOVE PATTERN. EACH DECKING PIECE SHALL BE NAILED TO EACH SUPPORT.
2. EACH PIECE OF DECKING SHALL BE TOENAILED AT EACH SUPPORT WITH ONE 16D COMMON NAIL THROUGH THE TONGUE AND FACE-NAILED WITH ONE 16D COMMON NAIL OR AS NOTED OTHERWISE.
3. CONTROLLED RANDOM PATTERN THERE SHALL BE A MINIMUM DISTANCE OF 24 INCHES (610 MM) BETWEEN END JOINTS IN ADJACENT COURSES. THE PIECES IN THE FIRST AND SECOND COURSES SHALL BEAR ON AT LEAST TWO SUPPORTS WITH END JOINTS IN THESE TWO COURSES OCCURRING ON ALTERNATE SUPPORTS. A MAXIMUM OF SEVEN INTERVENING COURSES SHALL BE PERMITTED BEFORE THIS PATTERN IS REPEATED.

NOTE: ALL EXPOSED WOOD TO BE SEALED WITH INSTALLER SUPPLIED CLEAR COAT FINISH APPLIED ONSITE BY INSTALLER

NOTE: DURING THE CONSTRUCTION PROCESS IT IS COMMON FOR SMALL GAPS TO APPEAR IN ANY NUMBER OF PLACES. ROMTEC DOES NOT PROVIDE CAULK OR ANY OTHER MATERIAL TO FILL THESE SMALL GAPS UNLESS IT IS SPECIFIED IN OUR SUBMITTAL

8-25-2020

NABIL TAHA
No. 11188
REGISTERED PROFESSIONAL ENGINEER
CIVIL & STRUCTURAL
Ex 6-30-21

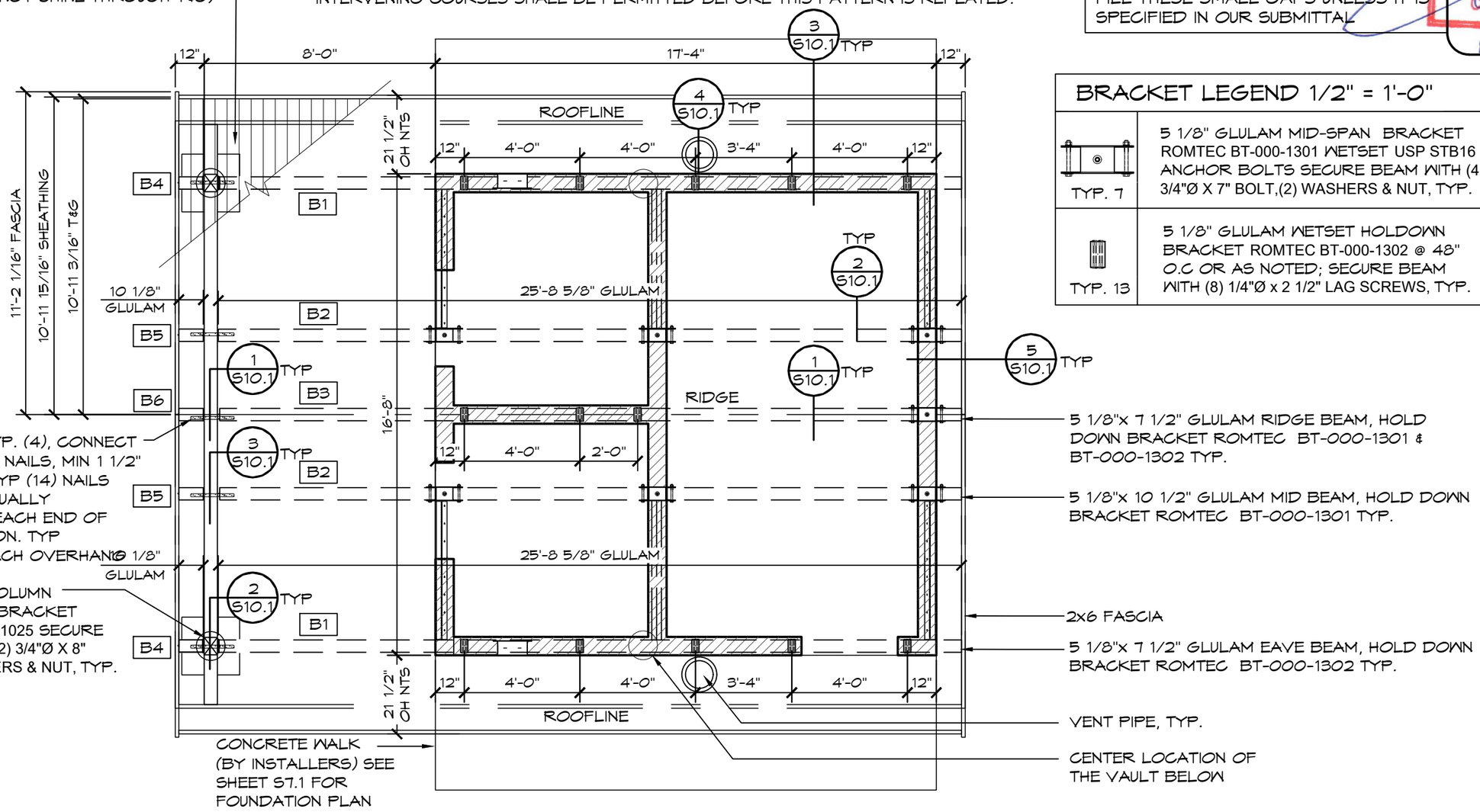

BRACKET LEGEND 1/2" = 1'-0"

TYP. 7	5 1/8" GLULAM MID-SPAN BRACKET ROMTEC BT-000-1301 WETSET USP STB16 ANCHOR BOLTS SECURE BEAM WITH (4) 3/4"Ø X 7" BOLT,(2) WASHERS & NUT, TYP.
TYP. 13	5 1/8" GLULAM WETSET HOLDOWN BRACKET ROMTEC BT-000-1302 @ 48" O.C OR AS NOTED; SECURE BEAM WITH (8) 1/4"Ø x 2 1/2" LAG SCREWS, TYP.

1 ROOF FRAMING PLAN
SCALE: 1/4" = 1'-0"

A B C D

Structural members only were included in this structural review/design by PSE. Non-structural items are NOT included.

© 2020 ROMTEC, INC. ALL RIGHTS RESERVED. THESE PLANS AND DRAWINGS MAY NOT BE REPRODUCED, ADAPTED OR FURTHER DISTRIBUTED, AND NO BUILDINGS MAY BE CONSTRUCTED FROM THESE PLANS, WITHOUT THE WRITTEN PERMISSION OF ROMTEC, INC.

PSE Consulting Engineers, Inc.
www.structure1.com
Klamath Falls Office
250 Main Klamath Falls, Oregon 97603
Phone: (541) 850-6300 Fax: (541) 850-6233
info@structure1.com
ROMTEC 220-57

ROMTEC
18240 NORTH BANK ROAD
ROSEBURG, OR 97470
(541)-496-3541 FAX (541)-496-0803

PROJECT: 1015 ASPEN
DIAMOND HILL PARK
CUMBERLAND, RHODE ISLAND
SHEET TITLE: ROOF FRAMING PLAN

PLAN SET# DHP01
DATE: 07/02/2020

REVISIONS

REV.	DATE:	BY
2	7/21/2020	TY
3	08/24/2020	TY

DRAWN BY: TY

SHEET NO. S9.1

8-25-2020

NABIL TAHA
No. 11188
REGISTERED PROFESSIONAL ENGINEER CIVIL & STRUCTURAL
Ex 6-30-21

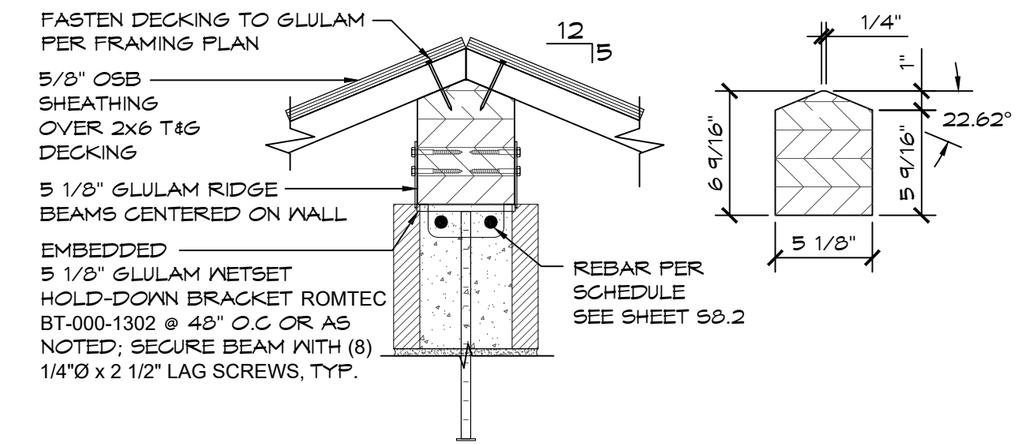

1 RIDGE-BEAM CONNECTION DETAIL

SCALE: 1 1/2" = 1'-0"

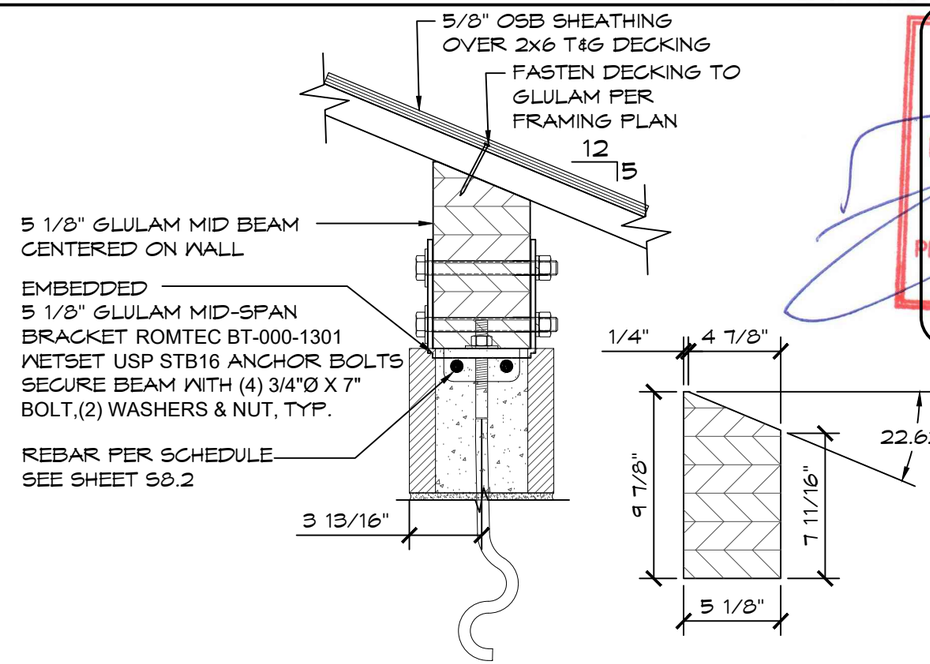

2 MID-BEAM CONNECTION DETAIL

SCALE: 1 1/2" = 1'-0"

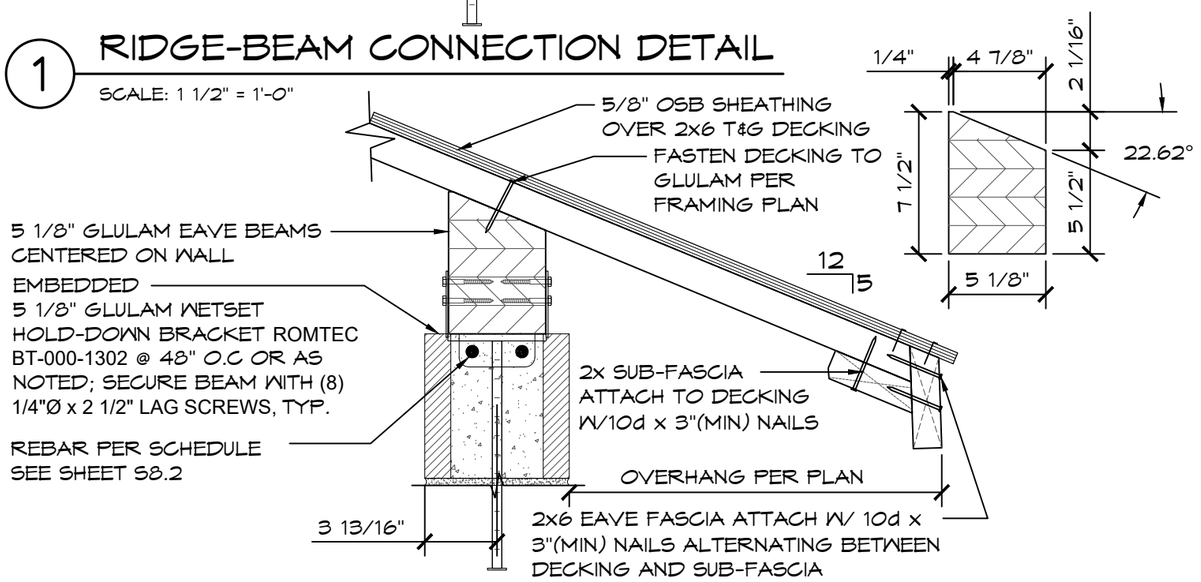

3 EAVE-BEAM CONNECTION DETAIL

SCALE: 1 1/2" = 1'-0"

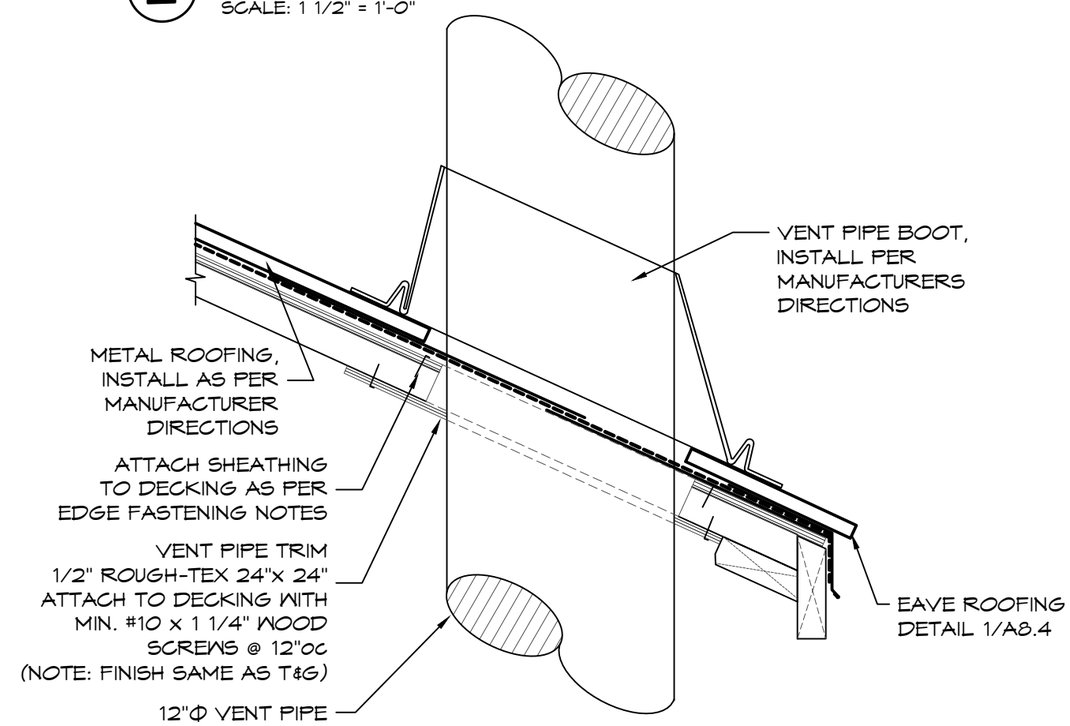

4 VENT PIPE BOOT FLASHING DETAIL

SCALE: 1 1/2" = 1'-0"

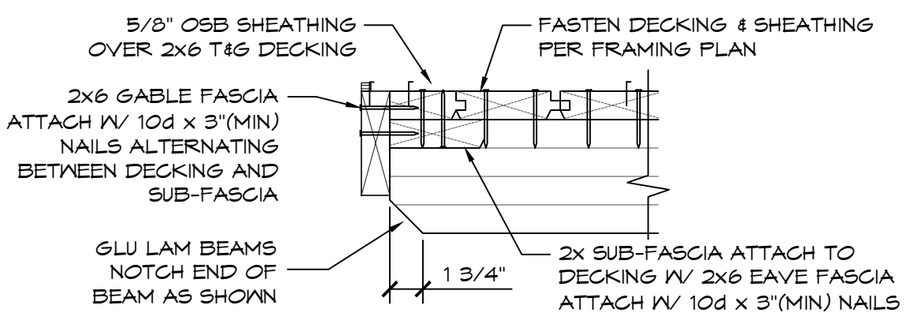

5 GABLE EAVE DETAIL, TYP

SCALE: 1 1/2" = 1'-0"

Structural members only were included in this structural review/design by PSE. Non-structural items are NOT included.

© 2020 ROMTEC, INC. ALL RIGHTS RESERVED. THESE PLANS AND DRAWINGS MAY NOT BE REPRODUCED, ADAPTED OR FURTHER DISTRIBUTED, AND NO BUILDINGS MAY BE CONSTRUCTED FROM THESE PLANS, WITHOUT THE WRITTEN PERMISSION OF ROMTEC, INC.

PSE Consulting Engineers, Inc.
www.structure1.com
Klamath Falls Office
250 Main Street, Klamath Falls, Oregon 97603
Phone: (541) 850-6300 Fax: (541) 850-6233
info@structure1.com
ROMTEC 220-57

ROMTEC
18240 NORTH BANK ROAD
ROSEBURG, OR 97470
(541)-496-3541 FAX (541)-496-0803

PROJECT: 1015 ASPEN
DIAMOND HILL PARK
CUMBERLAND, RHODE ISLAND

SHEET TITLE: CONNECTION DETAILS

PLAN SET# DHP01
DATE: 07/02/2020

REVISIONS

REV.	DATE:	BY

DRAWN BY: TY

SHEET NO. S10.1

8-25-2020

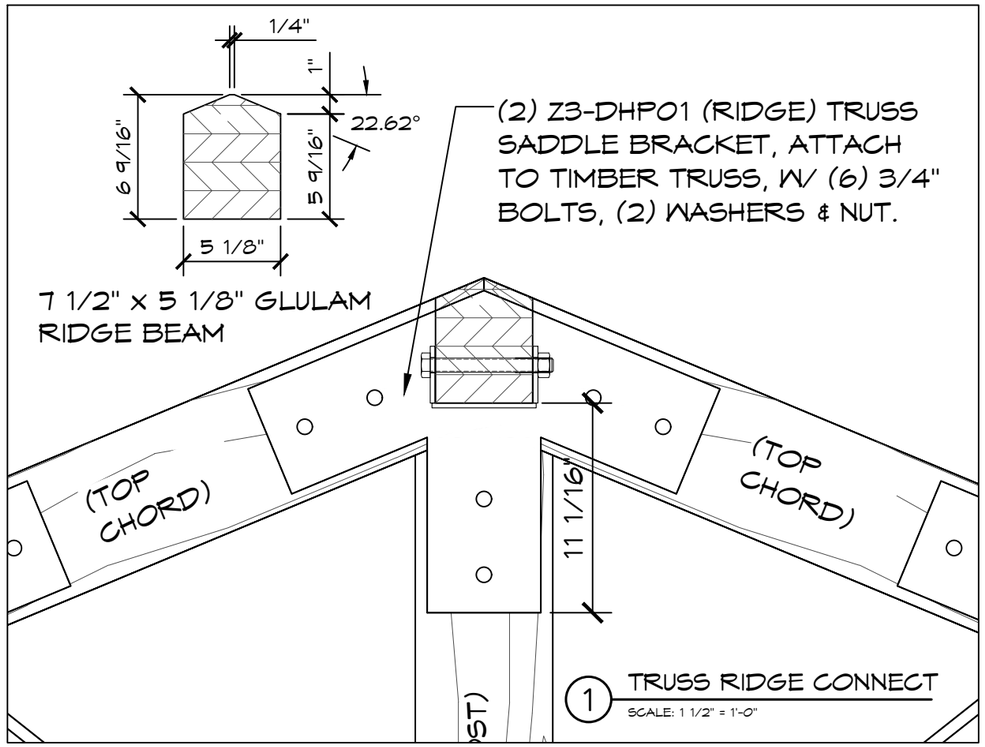

1 TRUSS RIDGE CONNECT
SCALE: 1 1/2" = 1'-0"

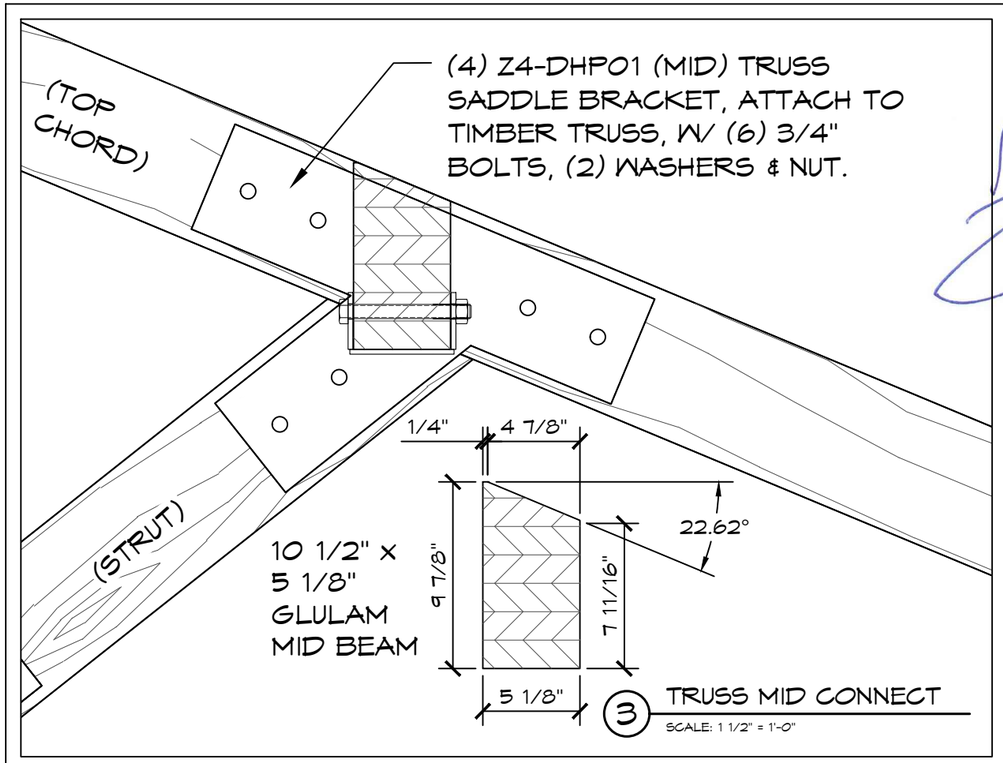

3 TRUSS MID CONNECT
SCALE: 1 1/2" = 1'-0"

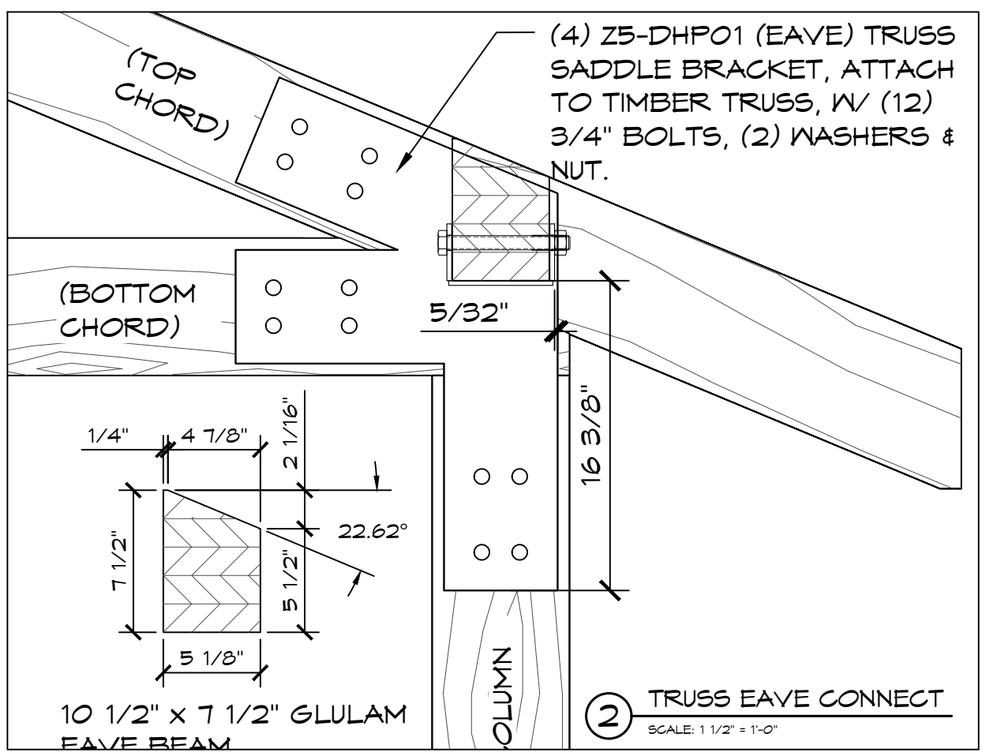

2 TRUSS EAVE CONNECT
SCALE: 1 1/2" = 1'-0"

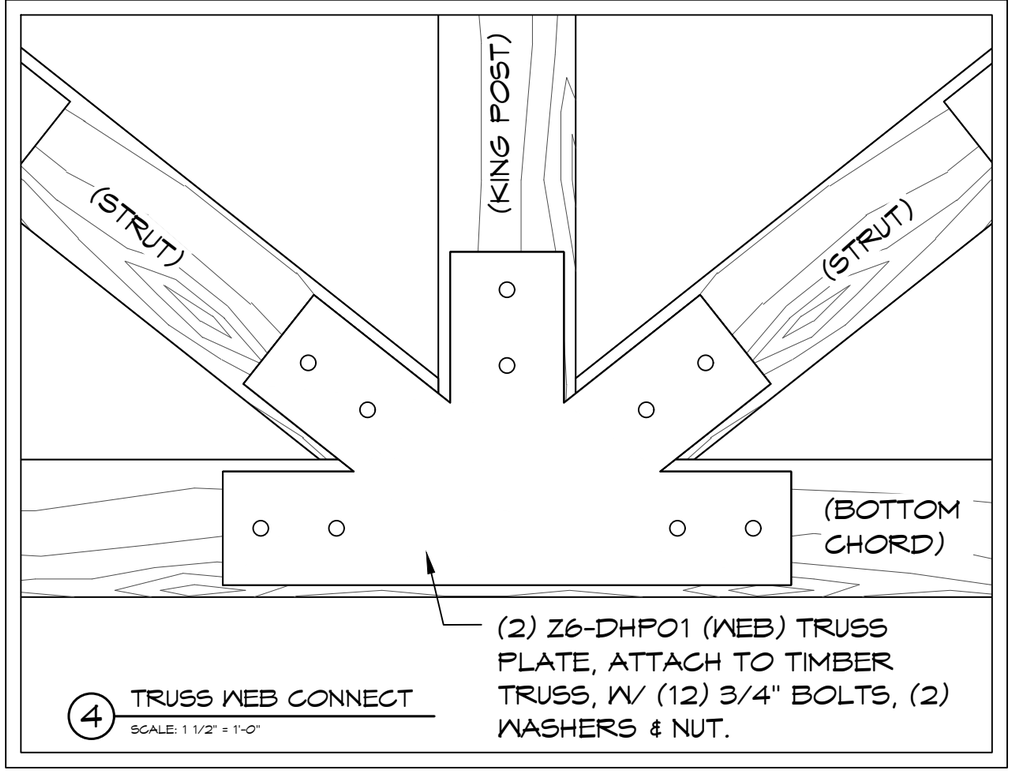

4 TRUSS WEB CONNECT
SCALE: 1 1/2" = 1'-0"

NABIL TAHA
No. 11188
REGISTERED PROFESSIONAL ENGINEER CIVIL & STRUCTURAL
Ex. 6-30-21

Structural members only were included in this structural review/design by PSE. Non-structural items are NOT included.

© 2020 ROMTEC, INC. ALL RIGHTS RESERVED. THESE PLANS AND DRAWINGS MAY NOT BE REPRODUCED, ADAPTED OR FURTHER DISTRIBUTED, AND NO BUILDINGS MAY BE CONSTRUCTED FROM THESE PLANS, WITHOUT THE WRITTEN PERMISSION OF ROMTEC, INC.

PSE Consulting Engineers, Inc.
www.structure1.com
Klamath Falls Office
250 Main Klamath Falls, Oregon 97603
Phone: (541) 882-6021 Fax: (541) 630-4233
info@structure1.com
ROMTEC 220-57

ROMTEC
18240 NORTH BANK ROAD
ROSEBURG, OR 97470
(541)-496-3541 FAX (541)-496-0803

PROJECT: 1015 ASPEN
DIAMOND HILL PARK
CUMBERLAND, RHODE ISLAND

SHEET TITLE: CONNECTION DETAILS

PLAN SET# DHP01
DATE: 07/02/2020

REVISIONS

REV.	DATE:	BY
2	7/27/2020	TY

DRAWN BY: TY

SHEET NO. S10.2

INTERNATIONAL PLUMBING CODE

SYM	FIXTURE TYPE	SEWER	VENT	COLD WATER	MIXED WATER	NO. OF FIXT.	W. FIXT. UNITS/EA	TOTAL W. FIXT. UNITS	DR. FIXT UNITS	TOTAL DR. FIXT. UNITS
LV-1	HAND SINK	1 1/4" 1	1/2" min	X	1/2	2	2	4	1	2
WH-1	WATER HEATER	X	3/4"	3/4"	-	X	X	X	X	X

NOTE: PROVIDE CLEAN-OUT BENEATH ALL SINKS AND LAVS AS REQUIRED BY CODE

NOTE: ROMTEC BUILDINGS ARE DESIGNED TO HAVE 40-60 PSI WATER PRESSURE FOR THE PLUMBING FIXTURES. IF THE SITE HAS A PRESSURE OTHER THAN THIS, IT IS THE OWNERS RESPONSIBILITY TO PROVIDE THE PRESSURE REDUCER OR BOOSTER PUMP NECESSARY.

GENERAL PLUMBING NOTES:

1. ALL PIPE (WATER, SEWER, VENT), JOINTS, AND WORK SHALL CONFORM TO INTERNATIONAL PLUMBING CODE, STATE CODES, COUNTY AND LOCAL CODES AND ORDINANCES.
2. CONTRACTOR TO CONFIRM LOCATIONS OF SEWER AND WATER TIE-INS
3. CONTRACTOR TO SOLIDLY BRACE ALL PIPING TIGHT AGAINST WALLS. FOR LONG OR COMPLICATED RUNS, SECURELY MOUNT USING UNISTRUT, IN STRAIGHT AND UNIFORM MANNER FOR FINISHED APPEARANCE. PIPING SHOWN IS DIAGRAMMATIC ONLY AND ACTUAL DESIGN BY CONTRACTOR.
4. CONTRACTOR MAY CHANGE PIPE SIZING IN FIELD TO PROVIDE ADEQUATE WATER PRESSURE TO ALL PLUMBING FIXTURES AS APPROVED BY INSPECTOR.
5. CONTRACTOR TO DETERMINE AND PROVIDE MEANS FOR DRAINING INTERIOR WATER AND SANITARY SEWER SYSTEMS, AS WELL AS SHUTOFF OF ALL FIXTURES
6. IF THE SITE REQUIRES AN ACCESSIBLE BACK FLOW PREVENTER AND/OR PRESSURE REDUCER OR BOOSTER PUMP IT IS THE OWNERS RESPONSIBILITY TO PROVIDE.
7. PLUMBING TO BE DRAINED BY GRAVITY TO SHUTOFF VALVE BOX.
8. WHEN INCLUDED HOT WATER HEATERS ARE TO BE INSTALLED IN STRICT ACCORDANCE WITH MANUFACTURERS INSTRUCTIONS AND ALL STATE, COUNTY, AND LOCAL CODES AND ORDINANCES.
9. FLUSHOMETERS ASSOCIATED WITH TOILETS USE NO MORE THAN 1.6 GALLONS PER FLUSH. FLUSHOMETERS ASSOCIATED WITH URINALS USE NO MORE THAN 1.0 GALLON PER FLUSH. BOTH OF THE ABOVE SHALL MEET PERFORMANCE STANDARDS BY ANSI A112.19.2 H&S CODE, SECTION 17921.3(B)
10. WHEN FIXTURES REQUIRE WALL CARRIERS THE WALL CARRIER SHALL BE SUPPLIED BY CONTRACTOR.
11. UNLESS SPECIFIED IN THE ROMTEC SUBMITTAL, ROMTEC DOES NOT SUPPLY INSULATION OR "FREEZE PROTECTION" FOR PLUMBING.

IPC NOTES

NOTES:

1. WATER PIPE SIZE AND PRESSURE REQUIREMENTS MUST BE CONFIRMED BY PLUMBING CONTRACTOR BASED ON LOCAL SUPPLY.
2. FIXTURE & FIXTURE CONNECTIONS ARE SYMBOLIC IN NATURE ONLY. REFER TO MANUFACTURER LITERATURE FOR EXACT FIXTURE SPECIFICATIONS.
3. ALL SANITARY AND DRAIN LINES SHALL BE SCHEDULE 40 PVC OR ABS.
4. ALL WATER LINES SHALL BE COPPER OR PER LOCAL CODE. NO JOINTS BENEATH THE SLAB.
5. WATER PIPE SIZING IS A MINIMUM SUGGESTION. PLUMBING CONTRACTOR WILL MAKE THE FINAL DETERMINATION.

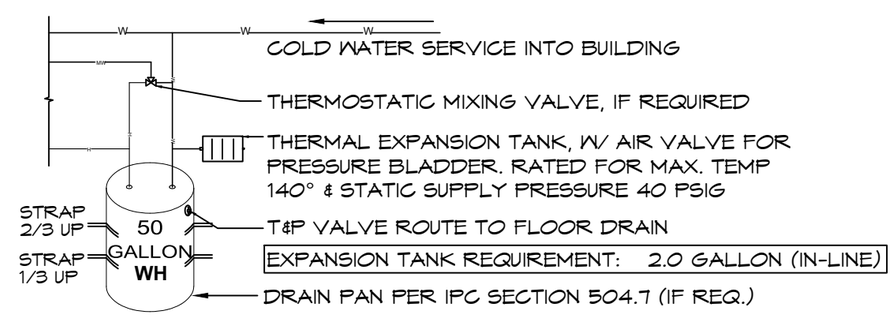

WATER HEATER STRAP ANCHORING REQ., SEE SHEET P1 (NOTE 8)

1 WATER HEATER DETAIL

SCALE: 1/4" = 1'-0"

08/24/2020

CERTIFIED MASTER KITCHEN & BATH DESIGNER
CMKBD
Cassandra Ruport
ID #1063772
NKBA
Cassandra Ruport

EXPIRES: 01/01/2021

Structural members only were included in this structural review/design by PSE. Non-structural items are NOT included.

© 2020 ROMTEC, INC. ALL RIGHTS RESERVED. THESE PLANS AND DRAWINGS MAY NOT BE REPRODUCED, ADAPTED OR FURTHER DISTRIBUTED, AND NO BUILDINGS MAY BE CONSTRUCTED FROM THESE PLANS, WITHOUT THE WRITTEN PERMISSION OF ROMTEC, INC.

PSE Consulting Engineers, Inc.
www.structure1.com
Klamath Falls Office
250 Main Klamath Falls, Oregon 97603
Phone: (541) 850-6300 Fax: (541) 850-6233
info@structure1.com
ROMTEC 220-57

ROMTEC
18240 NORTH BANK ROAD
ROSEBURG, OR 97470
(541)-496-3541 FAX (541)-496-0803

PROJECT: 1015 ASPEN
DIAMOND HILL PARK
CUMBERLAND, RHODE ISLAND

SHEET TITLE: PLUMBING SCHEDULE

PLAN SET# DHP01

DATE: 07/02/2020

REVISIONS

REV.	DATE:	BY:
1	7/09/2020	JRM

DRAWN BY: TY

SHEET NO. P1

PLUMBING LEGEND

—W—	COLD WATER
—MW—	MIXED WATER
—H—	HOT WATER
—SS—	SANITARY SEWER
—V—	VENT LINE

NOTE:
SINKS TO DRAIN TO VAULTS AND HAVE A LEVEL SENSOR INSTALLED

SEE INSTALL SUPPORT & MANUFACTURER GUIDELINES FOR SENSOR

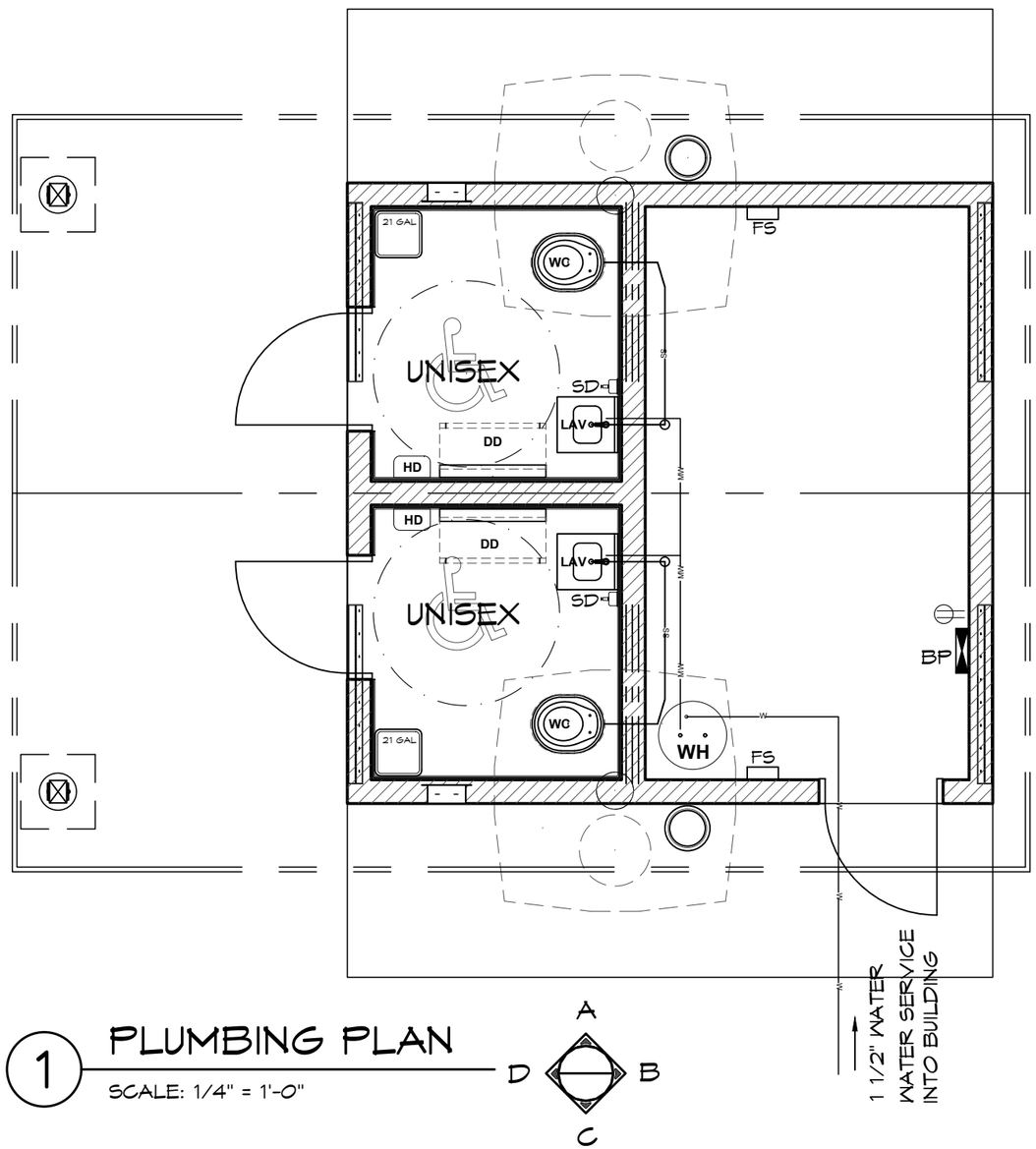

1 PLUMBING PLAN

SCALE: 1/4" = 1'-0"

08/24/2020

CERTIFIED MASTER KITCHEN & BATH DESIGNER
CMKBD
Cassandra Ruport
ID #1063772
NKBA

Cassandra Ruport

EXPIRES: 01/01/2021

Structural members only were included in this structural review/design by PSE. Non-structural items are NOT included.

© 2020 ROMTEC, INC. ALL RIGHTS RESERVED. THESE PLANS AND DRAWINGS MAY NOT BE REPRODUCED, ADAPTED OR FURTHER DISTRIBUTED, AND NO BUILDINGS MAY BE CONSTRUCTED FROM THESE PLANS, WITHOUT THE WRITTEN PERMISSION OF ROMTEC, INC.

PSE Consulting Engineers, Inc.
www.structure1.com
Klamath Falls Office
250 Main Klamath Falls, Oregon 97603
Phone: (541) 850-6300 Fax: (541) 850-6233
info@structure1.com
ROMTEC 220-57

ROMTEC
18240 NORTH BANK ROAD
ROSEBURG, OR 97470
(541)-496-3541 FAX (541)-496-0803

PROJECT: 1015 ASPEN
DIAMOND HILL PARK
CUMBERLAND, RHODE ISLAND

SHEET TITLE: PLUMBING PLAN

PLAN SET# DHP01

DATE: 07/02/2020

REVISIONS

REV.	DATE:	BY
1	7/09/2020	JRM
3	08/24/2020	TY

DRAWN BY: TY

SHEET NO. P2

GENERAL ELECTRICAL NOTES:

1. ALL WORK SHALL COMPLY WITH NATIONAL ELECTRICAL CODE, STATE AND LOCAL CODES.
2. OWNER TO PROVIDE TEMPORARY POWER AS REQUIRED DURING COURSE OF CONSTRUCTION.
3. ELECTRICAL SERVICE EQUIPMENT SUPPLIED BY OTHERS UNDER SEPARATE SUBMITTAL.
4. THE AIC VALUES SHOWN ON THESE ROMTEC PLANS ARE TO BE MADE CLEARLY AVAILABLE TO THE ELECTRICAL ENGINEER OF RECORD THAT WILL DESIGN THE MAIN SERVICE.
5. THE INSTALLER SHALL FURNISH & INSTALL SPECIFICATION GRADE CIRCUIT BREAKERS, WIRING, CONDUIT, SWITCHES AND GFI RECEPTACLES THROUGHOUT. INTERIOR RECEPTACLES & SWITCHES SHALL HAVE STAINLESS STEEL COVERPLATES AND EXTERIOR RECEPTACLES SHALL BE INSTALLED WITH A WEATHERPROOF IN USE COVER.
6. ELECTRICAL CONDUIT IS TO BE RUN WITHIN THE WALL WHEN POSSIBLE, EXCEPT IN THE MECHANICAL ROOM.
7. FOR MECHANICAL ROOM ALL EXPOSED CONDUIT IS TO BE SURFACE MOUNTED AND RUN TIGHT TO CEILING AS REQUIRED.
8. COORDINATE AC OUTLET HEIGHTS WITH OWNER PRIOR TO ROUGH-IN.

1	BP	200 AMP MAIN BREAKER PANEL
PER PLAN		HOME RUN TO BREAKER PANEL
PER PLAN	(BY INSTALLER)	110 VAC DUPLEX RECEPTACLE, GROUND FAULT PROTECTED MOUNTED MIN OF 15" TO MAX OF 48" ABOVE THE FLOOR CONFIRM EXACT LOCATION & HEIGHT WITH OWNER OR OWNERS REPRESENTATIVE.
1	$	SWITCH, SINGLE POLE MOUNTED A MAX OF 48" ABOVE THE FLOOR
3	LF-1	LIGHT FIXTURE, WALL MOUNT, EXTERIOR LIGHTS ARE UL LISTED TO U.S. SAFETY STANDARDS FOR WET LOCATIONS, TYP. OUTDOOR GENERAL PURPOSE LED WALL PACK, LITHONIA OLMP: (20W) (.166TA)
4	LF-2	48" LED VAPOR TIGHT CEILING/WALL MOUNT LIGHT LITHONIA XVML L48 3500LM 40K: (33W) (.275A)
1	WH	50 GAL WATER HEATER, ELECTRIC PROVIDE A WATER HEATER DISCONNECT CAPABLE OF SIMULTANEOUSLY DISCONNECTING ALL UNGROUNDED CONDUCTORS. THE DISCONNECTING MEANS SHALL BE WITHIN SIGHT OF. WHERE THE DISCONNECTING MEANS IS OUT OF THE LINE OF SIGHT FROM ANY SECTION THAT IS ABLE TO BE ENERGIZED, THE DISCONNECTING MEANS SHALL BE CAPABLE OF BEING LOCKED IN THE OPEN POSITION.
2	OS	WALL MOUNT OCCUPANCY SENSOR
2	FS	FLOAT SWITCH
2	HD	XLERATOR HAND DRYER

08/24/2020

CERTIFIED MASTER KITCHEN & BATH DESIGNER
CMKBD
Cassandra Ruport
ID #1063772
NKBA

Cassandra Ruport

EXPIRES: 01/01/2021

Structural members only were included in this structural review/design by PSE. Non-structural items are NOT included.

© 2020 ROMTEC, INC. ALL RIGHTS RESERVED. THESE PLANS AND DRAWINGS MAY NOT BE REPRODUCED, ADAPTED OR FURTHER DISTRIBUTED, AND NO BUILDINGS MAY BE CONSTRUCTED FROM THESE PLANS, WITHOUT THE WRITTEN PERMISSION OF ROMTEC, INC.

PSE Consulting Engineers, Inc.
www.structure1.com
Klamath Falls Office
250 Main Klamath Falls, Oregon 97603
Phone: (541) 850-6300 Fax: (541) 850-6233
info@structure1.com
ROMTEC 220-57

ROMTEC
18240 NORTH BANK ROAD
ROSEBURG, OR 97470
(541)-496-3541 FAX (541)-496-0803

PROJECT: 1015 ASPEN
DIAMOND HILL PARK
CUMBERLAND, RHODE ISLAND

SHEET TITLE: ELECTRICAL SCHEDULE

PLAN SET# DHP01

DATE: 07/02/2020

REVISIONS

REV.	DATE:	BY:
1	04/23/2020	TY
2	7/27/2020	TY

DRAWN BY: TY

SHEET NO. E1

NOTE: ELECTRICAL PANEL MAY BE RELOCATED AT THE DISCRETION OF THE INSTALLER, PANEL MUST MAINTAIN ALL APPLICABLE CODE CLEARANCES.

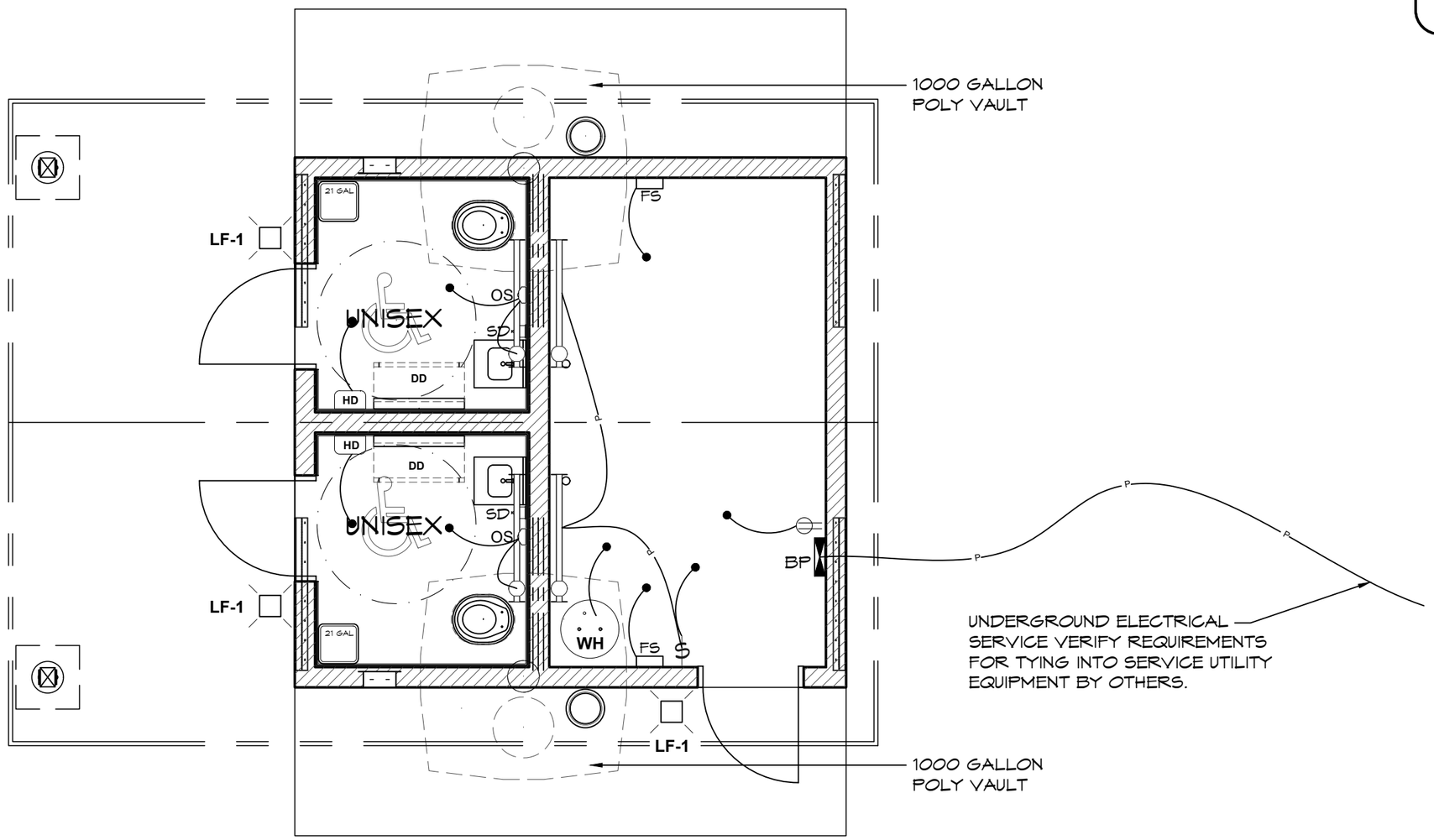

1 ELECTRICAL PLAN

SCALE: 1/4" = 1'-0"

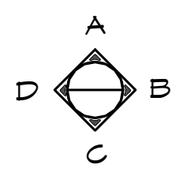

08/24/2020

CERTIFIED MASTER KITCHEN & BATH DESIGNER
CMKBD
Cassandra Ruport
ID #1063772
NKBA
Cassandra Ruport

EXPIRES: 01/01/2021

Structural members only were included in this structural review/design by PSE. Non-structural items are NOT included.

© 2020 ROMTEC, INC. ALL RIGHTS RESERVED. THESE PLANS AND DRAWINGS MAY NOT BE REPRODUCED, ADAPTED OR FURTHER DISTRIBUTED, AND NO BUILDINGS MAY BE CONSTRUCTED FROM THESE PLANS, WITHOUT THE WRITTEN PERMISSION OF ROMTEC, INC.

PSE Consulting Engineers, Inc.
www.structure1.com
Klamath Falls Office
250 Main Klamath Falls, Oregon 97603
Phone: (541) 850-6300 Fax: (541) 850-6233
info@structure1.com
ROMTEC 220-57

ROMTEC
18240 NORTH BANK ROAD
ROSEBURG, OR 97470
(541)-496-3541 FAX (541)-496-0803

PROJECT: 1015 ASPEN
DIAMOND HILL PARK
CUMBERLAND, RHODE ISLAND

SHEET TITLE: ELECTRICAL PLANS

PLAN SET# DHP01

DATE: 07/02/2020

REVISIONS

REV.	DATE:	BY:
2	7/27/2020	TY
3	08/24/2020	TY

DRAWN BY: TY

SHEET NO. E2

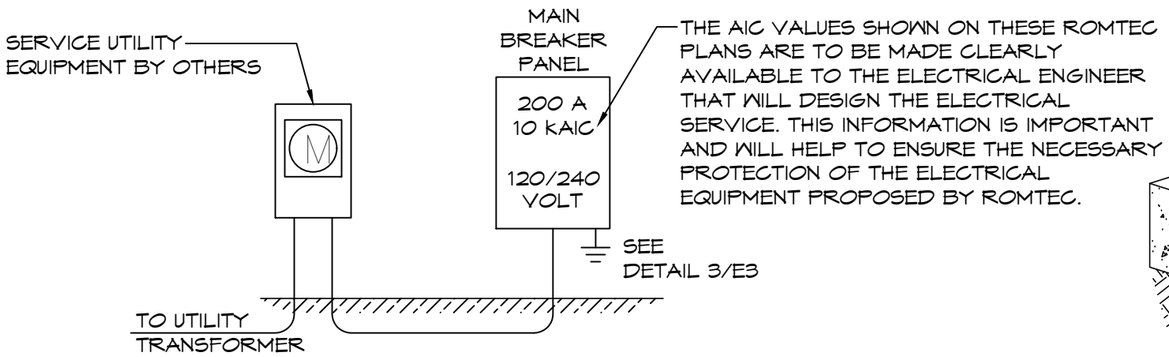

1 ONE-LINE DIAGRAM

SCALE: NONE

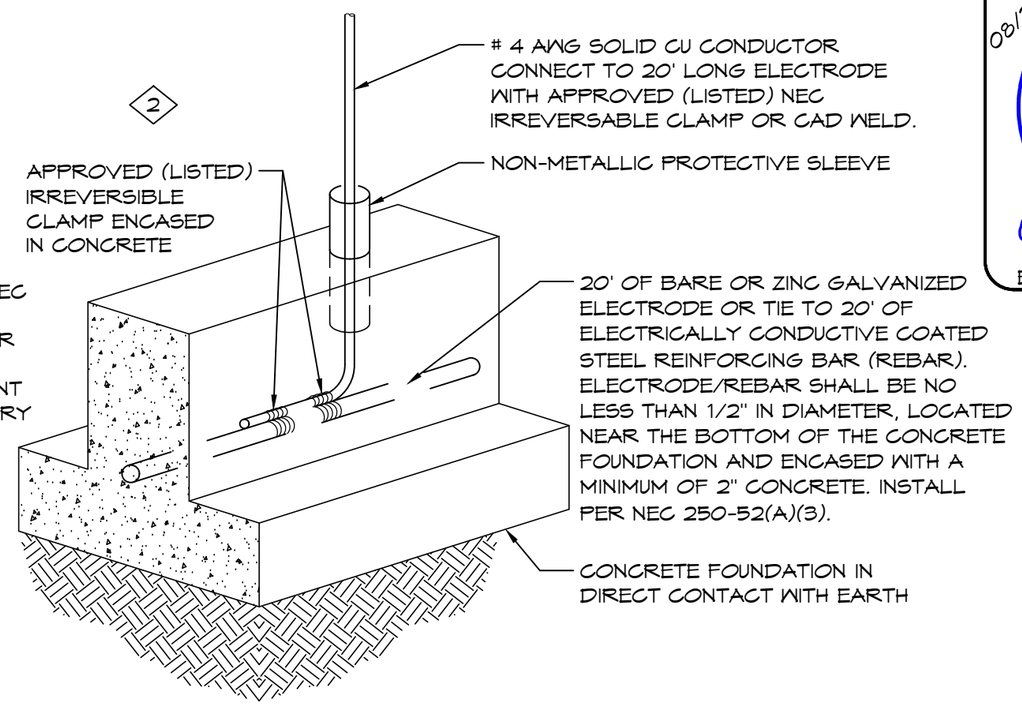

3 CONCRETE ENCASED SERVICE GROUND

SCALE: NONE

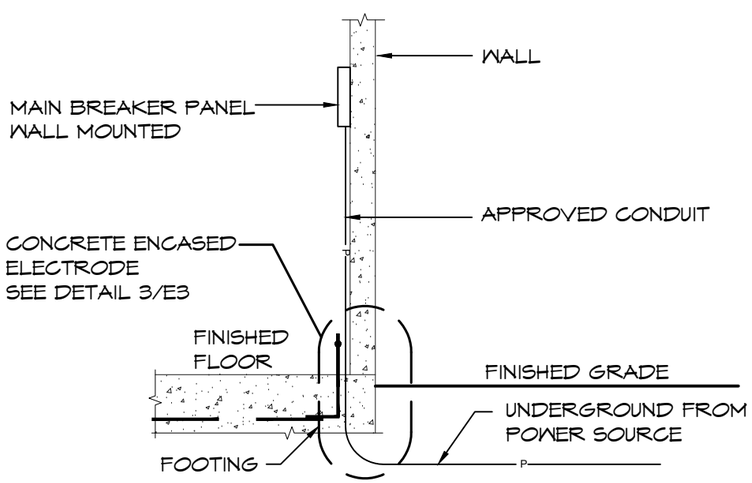

2 RISER DIAGRAM

SCALE: NONE

" NEC ARTICLE 250 OR LOCAL CODES MAY REQUIRE OR ALLOW ADDITIONAL GROUNDING

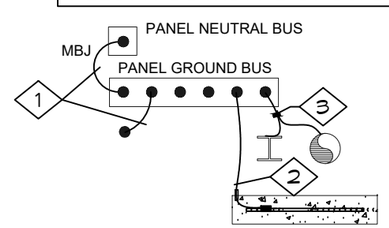

KEYED NOTES

1. #4 CU MAIN BONDING JUMPER AND EQUIPMENT BONDING JUMPER PER NEC 250.28(D), 250.102(C) AND TABLE 250.66.
2. #4 CU TO CONCRETE ENCASED ELECTRODE PER NEC 250.52(A)(3) AND 250.66(B).
3. WHERE REQUIRED, BOND PIPING SYSTEMS AND EXPOSED STRUCTURAL STEEL PER NEC 250.104

4 GROUNDING/BONDING DETAIL

SCALE: NONE

08/24/2020
CERTIFIED MASTER KITCHEN & BATH DESIGNER
CMKBD
Cassandra Ruport
ID #1063772
NKBA
Cassandra Ruport
EXPIRES: 01/01/2021

Structural members only were included in this structural review/design by PSE. Non-structural items are NOT included.

© 2020 ROMTEC, INC. ALL RIGHTS RESERVED. THESE PLANS AND DRAWINGS MAY NOT BE REPRODUCED, ADAPTED OR FURTHER DISTRIBUTED, AND NO BUILDINGS MAY BE CONSTRUCTED FROM THESE PLANS, WITHOUT THE WRITTEN PERMISSION OF ROMTEC, INC.

PSE Consulting Engineers, Inc.
www.structure1.com
Klamath Falls Office
250 Main Klamath Falls, Oregon 97603
Phone: (541) 850-6300 Fax: (541) 850-6233
info@structure1.com
ROMTEC 220-57

ROMTEC
18240 NORTH BANK ROAD
ROSEBURG, OR 97470
(541)-496-3541 FAX (541)-496-0803

PROJECT: 1015 ASPEN
DIAMOND HILL PARK
CUMBERLAND, RHODE ISLAND

SHEET TITLE: ELECTRICAL RISER DETAILS

PLAN SET# DHP01
DATE: 07/02/2020
REVISIONS

REV.	DATE:	BY

DRAWN BY: TY

SHEET NO. E3

2.01 STRUCTURAL CALCULATIONS

Current building structural calculations follow this page.

PSE CONSULTING ENGINEERS INC.

STRUCTURAL ENGINEERING CALCULATIONS

PROJECT: Diamond Hill Park Restroom

PROJECT LOCATION: 4097 Diamond Hill RD
Cumberland, RI 02864

PSE PROJECT NUMBER: Romtec 220-57

DATE: July 10, 2020

BY: Nabil Taha, Ph.D., P.E.

7-10-2020

NABIL TAHA
No. 11188
REGISTERED
PROFESSIONAL ENGINEER
CIVIL & STRUCTURAL

Ex 6-30-21

250-A Main Street
Klamath Falls, OR. 97601

E-Mail: info@structure1.com
Web: www.structure1.com

ph. (541) 850-6300
fax (541) 850-6233

Table of Contents:

Subject:	Page:
1- References / Software:	10-99
2- Design Criteria:	100-199
3- Analysis & Design:	1,000 – 1,999

250-A Main Street
Klamath Falls, OR. 97601

E-Mail: info@structure1.com
Web: www.structure1.com

ph. (541) 850-6300
fax (541) 850-6233

References:

1- Literature:

a. 2019 Rhode Island Building Code (RISBC-1), based on the 2015 International Building Code (IBC)

b. Design of Wood Structures, Donald E. Breyer 4th ED.

c. Building Code Requirements for Masonry Structures, TMS 402

d. Building Code Requirements for Concrete, ACI 318

2- Software:

a. RISA 3D Version 17.0, RISA Technologies,

b. Wood Works Design Office Version 11.0, American Forest & Paper Association

c. Engineering International Spreadsheets Daniel T. Li

PSE CONSULTING ENGINEERS INC.
PROJECT #: ROMTEC 220-57

Design Criteria:

1- Location:	4097 Diamond Hill Road, Cumberland, RI 02864 (Lat. 42° 00' 09.6" Long. 71° 25' 05.5")	
2- Seismic:	RC	II
	SDC	B
	Site Class	D
	S_{ms}	0.287
	S_{m1}	0.152
	S_{DS}	0.191
	S_{D1}	0.101
	I_E	1.0
	R	5
3- Wind:	Ultimate wind speed	131 mph (3 s. gust)
	Exposure	C
	RC	II
4- Snow:	40 psf (ground) 30 psf (flat roof)	
5- Soil Bearing Capacity:	1500 psf (presumptive value from IBC)	
6- Gravity Loads:	DL Floor:	15 psf
	LL Floor:	40 psf
	DL Roof:	15 psf
	CMU Walls:	81 psf
7- Deflection Criteria:	Floor LL Deflection:	L/480
	Roof TL Deflection:	L/180

**Other criteria assumed as stated in design calculations.

250-A Main Street
Klamath Falls, OR. 97601

E-Mail: info@structure1.com
Web: www.structure1.com

ph. (541) 850-6300
fax (541) 850-6233

ATC Hazards by Location

Search Information

Address:	4097 Diamond Hill Road, Town of Cumberland, RI 02864
Coordinates:	42.0026692, -71.4182014
Elevation:	219 ft
Timestamp:	2020-07-08T14:59:42.159Z
Hazard Type:	Seismic
Reference Document:	ASCE7-10
Risk Category:	II
Site Class:	D

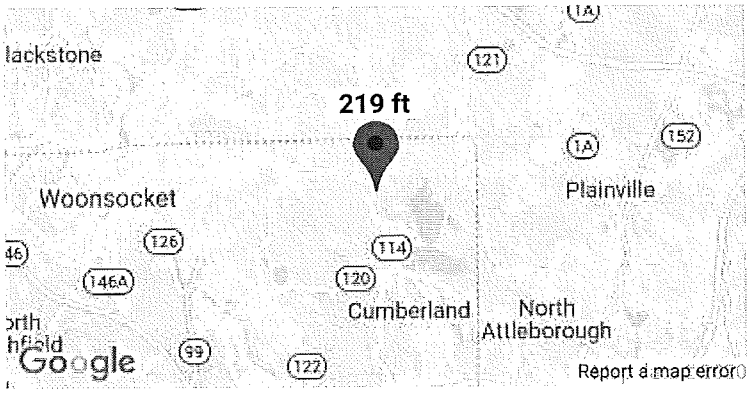

MCER Horizontal Response Spectrum

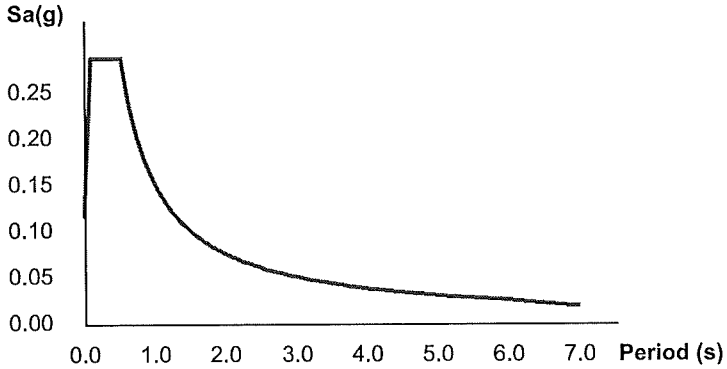

Design Horizontal Response Spectrum

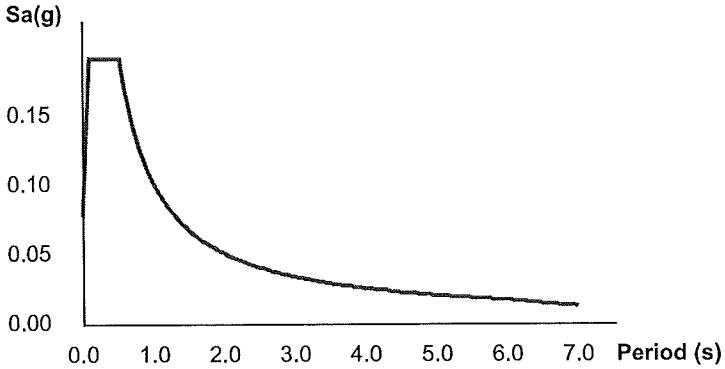

Basic Parameters

Name	Value	Description
S_S	0.179	MCE_R ground motion (period=0.2s)
S_1	0.063	MCE_R ground motion (period=1.0s)
S_{MS}	0.287	Site-modified spectral acceleration value
S_{M1}	0.152	Site-modified spectral acceleration value
S_{DS}	0.191	Numeric seismic design value at 0.2s SA
S_{D1}	0.101	Numeric seismic design value at 1.0s SA

Additional Information

Name	Value	Description
SDC	B	Seismic design category
F_a	1.6	Site amplification factor at 0.2s
F_v	2.4	Site amplification factor at 1.0s

CR_S	0.895	Coefficient of risk (0.2s)
CR_1	0.898	Coefficient of risk (1.0s)
PGA	0.091	MCE_G peak ground acceleration
F_{PGA}	1.6	Site amplification factor at PGA
PGA_M	0.146	Site modified peak ground acceleration
T_L	6	Long-period transition period (s)
SsRT	0.179	Probabilistic risk-targeted ground motion (0.2s)
SsUH	0.201	Factored uniform-hazard spectral acceleration (2% probability of exceedance in 50 years)
SsD	1.5	Factored deterministic acceleration value (0.2s)
S1RT	0.063	Probabilistic risk-targeted ground motion (1.0s)
S1UH	0.07	Factored uniform-hazard spectral acceleration (2% probability of exceedance in 50 years)
S1D	0.6	Factored deterministic acceleration value (1.0s)
PGAd	0.5	Factored deterministic acceleration value (PGA)

The results indicated here DO NOT reflect any state or local amendments to the values or any delineation lines made during the building code adoption process. Users should confirm any output obtained from this tool with the local Authority Having Jurisdiction before proceeding with design.

Disclaimer

Hazard loads are provided by the U.S. Geological Survey Seismic Design Web Services.

While the information presented on this website is believed to be correct, ATC and its sponsors and contributors assume no responsibility or liability for its accuracy. The material presented in the report should not be used or relied upon for any specific application without competent examination and verification of its accuracy, suitability and applicability by engineers or other licensed professionals. ATC does not intend that the use of this information replace the sound judgment of such competent professionals, having experience and knowledge in the field of practice, nor to substitute for the standard of care required of such professionals in interpreting and applying the results of the report provided by this website. Users of the information from this website assume all liability arising from such use. Use of the output of this website does not imply approval by the governing building code bodies responsible for building code approval and interpretation for the building site described by latitude/longitude location in the report.

IBC SEISMIC DESIGN

EQUIVALENT LATERAL FORCE PROCEDURE

JOB NUMBER Romtec 220-57

DESIGNER CSK

Design Information

DATA	VALUE	SOURCE
S_1=	0.063	Seismic Design Parameters (Software)
S_{MS}=	0.287	Seismic Design Parameters (Software)
S_{M1}=	0.152	Seismic Design Parameters (Software)
I_E	1.0	ASCE 7-10 Table 1.5-2
Risk Category	2	ASCE 7-10 Table 1.5-1
R	5	ASCE 7-10 Table 12.2-1
h_n	10	Height per ASCE 7-10
C_t	0.02	ASCE 7-10 Table 12.8-2

S_{MS}: Max considered spectral response acceleration for short periods

S_{M1}: Max considered spectral response acceleration for 1-second period

I_E : Seismic importance factor

R: Response modification factor

1) Design spectral response acceleration

S_{DS}: 5% Damped spectral response acceleration at short periods

S_{D1}: 5% Damped spectral response acceleration at 1 second period

$S_{DS}=2/3(S_{ms})$ $S_{DS}=$ 2/3 X 0.287 $S_{DS}=$ 0.191 [IBC Eq. 16-39]

$S_{D1}=2/3(S_{m1})$ $S_{D1}=$ 2/3 X 0.152 $S_{D1}=$ 0.101 [IBC Eq. 16-40]

2) Seismic design category

From Table IBC 1613.3.5(1) : B

From Table IBC 1613.3.5(2) : B

Governing Design Category B

3) Determine design base shear (V)

Equivalent Force Procedure
[ASCE 7-10, 12.8.1]

$V= C_s \times W$

C_s : Seismic Response Coefficient

W : Total dead load and other applicable loads

A. [ASCE 7-10, 12.8.1.1, Eq. 12.8-2]

$C_S = \frac{S_{DS}}{R / I}$ $C_S = \frac{0.191}{5} 1.0$ $C_S=$ 0.038

B. Nor greater than

$C_S = \frac{S_{D1}}{T (R / I)}$ [ASCE 7-10, 12.8.1.1, Eq. 12.8-3] $T = T_a = C_t (h_n^x)$ [ASCE 7-10, 12.8.2.1, Eq. 12.8-7]

$C_S = \frac{0.101 \text{ X } 1}{0.112 \text{ X } 5}$

T_a : Approximate Fundamental Period

$C_S=$ 0.180 $T= 0.020 \text{ X} 10^{0.75}$ $T=$ 0.112

C. Nor less than [ASCE 7-10, 12.8.1.1, Eq. 12.8-5]

$C_S = 0.044 (S_{DS}) (I)$ $C_S = 0.044 \text{ X } 0.191 \text{ X} 1$ $C_S=$ 0.0084

Governing C_s = 0.038

V= Cs x W V = 0.038 X W Refer to sheet two for W and Calculated V

IBC SEISMIC DESIGN

VERTICLE FORCE DISTRIBUTION EQUIVALENT LATERAL FORCE PROCEDURE

JOB NUMBER Romtec 220-57

DESIGNER CSK

1. Determine dead load at each level of building.

Structural portion		DL (PSF)	Area (SF)	Length (FT)	Height (FT)	Total Weight (LB)
a) Roof	Diaphram elevation from the base level in ft				8	
	Roof	15	601	NA	NA	9015
	Misc.	0	0	0	0	0
	Misc. (LBS)	0	NA	NA	NA	0
c) 5th floor	Diaphram elevation from the base level in ft				0	
	Ext. Walls	0	NA	0	0	0
	Int. Walls	0	NA	0	0	0
	Floor	0	0	NA	NA	0
	Misc.	0	0	0	0	0
	Misc. (LBS)	0	NA	NA	NA	0
d) 4th floor	Diaphram elevation from the base level in ft				0	
	Ext. Walls	0	NA	0	0	0
	Int. Walls	0	NA	0	0	0
	Floor	0	0	NA	NA	0
	Misc.	0	0	0	0	0
	Misc. (LBS)	0	NA	NA	NA	0
e) 3rd floor	Diaphram elevation from the base level in ft				0	
	Ext. Walls	0	NA	0	0	0
	Int. Walls	0	NA	0	0	0
	Floor	0	0	NA	NA	0
	Misc.	0	0	0	0	0
	Misc. (LBS)	0	NA	NA	NA	0
f) 2nd floor	Diaphram elevation from the base level in ft				0	
	Ext. Walls	0	NA	0	0	0
	Int. Walls	0	NA	0	0	0
	Floor	0	0	NA	NA	0
	Misc.	0	0	0	0	0
	Misc. (LBS)	0	NA	NA	NA	0
g) 1st floor	Ext. Walls	81	NA	91	10	73710
	Int. Walls	0	NA	0	0	0
	Misc.	0	0	0	0	0
				TOTAL DEAD LOAD (LB) =		82725

2) Determine verticle force distribution at each level ASCE 7-10 12.8-3

$F_x = C_{vx}\ x\ V$ ASCE 7-10 Eq. 12.8-11

$$C_{vx} = \frac{w_x\ x\ h_x^{\ k}}{\sum w_i h_i^{\ k}}$$ ASCE 7-10 Eq. 12.8-12

F_x: Lateral seismic force at any level

V: Seismic base shear (Kips)

w_x & w_i : The portion of the total gravity load of the structure (W) located or assigned to level i or x

h_x & h_x: The height (ft) from the base to level i or x diaphram.

k : An exponent related to the structures period (T) as follows;

$T \leq 0.5$ sec $k = 1$ $T \geq 2.5$ sec $k = 2$ $0.5 \leq T \leq 2.5$ Interpolate between 1 & 2

Refer to sheet one for V

V = 0.038 X W V = 0.038 X 82725 V= 3.166 (kips) T= 0.1125 k= 1

Level (floor)	Wall Height (ft)	Diaphram Height (Ft)	W_x (kips)	$W_x{*}h_x^k$	C_{vx}	F_x (kips)	Allowable F_x (kips)
Roof	10	8	45.870	367	1.000	3.17	2.26
5	0	0	0.000	0	0.000	0	0.00
4	0	0	0.000	0	0.000	0	0.00
3	0	0	0.000	0	0.000	0	0.00
2	0	0	0.000	0	0.000	0.00	0.00
			45.870	367	1.000	3.17	2.3

Note: The Total Shear shown in the right hand column is an "allowable" load.

MecaWind v2326

Software Developer: Meca Enterprises Inc., www.meca.biz, Copyright © 2018

Calculations Prepared by:
Date: Jul 08, 2020

File Location:
\\KF-data\ENG - Project\KF2020 Multiple\Romtec\
220-57 DHP01 Diamond Hill Park Restroom RI\Dsg Engr\Admin\
2020-07-08 MECA Wind Pressure.pdf

Basic Wind Parameters

Wind Load Standard	= ASCE 7-10	Exposure Category	= C
Wind Design Speed	= 131.0 mph	Risk Category	= II
Structure Type	= Building	Building Type	= Enclosed

General Wind Settings

	= ASCE 7-10 Wind Parameters	=
Incl_LF	= Include ASD Load Factor of 0.6 in Pressures	= True
DynType	= Dynamic Type of Structure	= Rigid
NF	= Natural Frequency of Structure (Mode 1)	= 1.000 Hz
NF	= Natural Frequency of Structure	= 1.000 Hz
Alt	= Altitude (Ground Elevation) above Sea Level	= 0.000 ft
Bdist	= Base Elevation of Structure	= 0.000 ft
GenElev	= Specify the Elevations For Wind Pressures	= Mean Roof Ht
SDB	= Simple Diaphragm Building	= False
MWFRS	= Analysis Procedure being used for MWFRS	= Ch 27 Pt 1
C&C	= Analysis Procedure being used for C&C	= Ch 30 Pt 1
Reacs	= Show the Base Reactions in the output	= False
MWFRSType	= MWFRS Method Selected	= Ch 27 Pt 1

Topographic Factor per Fig 26.8-1

Topo	= Topographic Feature	= None
Kzt	= Topographic Factor	= 1.000

Building Inputs

RoofType:	Building Roof Type	= Gabled	: Gabled	=	
W	: Width Perp to Ridge	= 16.667 ft	L	: Length Along Ridge	= 17.334 ft
EHt	: Eave Height	= 8.000 ft	RE	: Roof Entry Method	= Slope
Slope	: Slope of Roof	= 5.0 :12	OH	: Specify Roof to Wall intersections and Overhangs	= Overhang
Parapet	: Type of Parapet	= None	Theta	: Roof Slope	= 22.62 Deg
Par	: Is there a Parapet	= False	OH_ALL	: Overhang	= 2.000 ft
OH_ALL	: Overhang	= 2.000 ft	OH_ALL	: Overhang	= 2.000 ft

Exposure Constants per Table 26.9-1:

Alpha:	Const from Table 26.9-1= 9.500	Zg:	Const from Table 26.9-1= 900.000 ft
At:	Const from Table 26.9-1= 0.105	Bt:	Const from Table 26.9-1= 1.000
Am:	Const from Table 26.9-1= 0.154	Bm:	Const from Table 26.9-1= 0.650
C:	Const from Table 26.9-1= 0.200	Eps:	Const from Table 26.9-1= 0.200

Overhang Inputs:

Std	= Overhangs on all sides are the same	= True
OHType	= Type of Roof Wall Intersections	= Overhang
OH	= Overhang of Roof Beyond Wall	= 2.000 ft

Main Wind Force Resisting System (MWFRS) Calculations per Ch 27 Part 1:

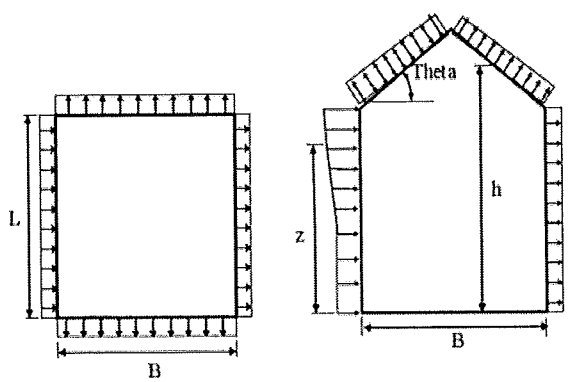

EHt	= Eave Height	= 8.000 ft
RHt	= Ridge Height	= 11.472 ft
h	= Mean Roof Height: 0.5*(EHt+RHt)	= 9.736 ft
Zh	= Mean Roof Height for Kh: h + Base_Dist	= 9.736 ft
Kh	= Since Zh<15 ft [4.572 m] --> 2.01 * (15/zg)^(2/Alpha)	= 0.849
Kzt	= Topographic Factor is 1 since no Topographic feature specified	= 1.000

Kd	= Wind Directionality Factor per Table 26.6-1	= 0.85
GCPi	= Ref Table 26.11-1 for Enclosed Building	= +/-0.18
RA	= Roof Area	= 477.65 sq ft
LF	= Load Factor based upon ASD Design	= 0.60
qh	= (0.00256 * Kh * Kzt * Kd * V^2) * LF	= 19.02 psf
qin	= For Negative Internal Pressure of Enclosed Building use qh*LF	= 19.02 psf
qip	= For Positive Internal Pressure of Enclosed Building use qh*LF	= 19.02 psf

Gust Factor Calculation:

Gust Factor Category I Rigid Structures - Simplified Method		
G1	= For Rigid Structures (Nat. Freq.>1 Hz) use 0.85	= 0.85
Gust Factor Category II Rigid Structures - Complete Analysis		
Zm	= 0.6 * Ht	= 15.000 ft
Izm	= Cc * (33 / Zm) ^ 0.167	= 0.228
Lzm	= L * (Zm / 33) ^ Epsilon	= 427.057
Q	= (1 / (1 + 0.63 * ((B + Ht) / Lzm)^0.63))^0.5	= 0.950
G2	= 0.925*((1+1.7*lzm*3.4*Q)/(1+1.7*3.4*lzm))	= 0.898
Gust Factor Used in Analysis		
G	= Lessor Of G1 Or G2	= 0.850

MWFRS Wind Normal to Ridge (Ref Fig 27.4-1)

h	= Mean Roof Height Of Building	= 9.736 ft
RHt	= Ridge Height Of Roof	= 11.472 ft
B	= Horizontal Dimension Of Building Normal To Wind Direction	= 17.334 ft
L	= Horizontal Dimension Of building Parallel To Wind Direction	= 16.667 ft
L/B	= Ratio Of L/B used For Cp determination	= 0.962
h/L	= Ratio Of h/L used For Cp determination	= 0.584
Slope	= Slope of Roof	= 22.62 Deg
OH_Bot_-Y	= Overhang Coefficient Bottom Surface (Windward Only)	= 0.8, 0.8
OH_Top_+X+Y	= Overhang Coefficient Overhang +X+Y (Leeward)	= -0.6, -0.6
OH_Top_+X-Y	= Overhang Coefficient Overhang +X-Y (Windward)	= 0.07, -0.39
OH_Top_+Y	= Overhang Coefficient Top +Y (Leeward)	= -0.6, -0.6
OH_Top_-X+Y	= Overhang Coefficient Overhang -X+Y (Leeward)	= -0.6, -0.6
OH_Top_-X-Y	= Overhang Coefficient Overhang -X-Y (Windward)	= 0.07, -0.39
OH_Top_-Y	= Overhang Coefficient Top Windward Edge	= 0.07, -0.39
Roof_LW	= Roof Coefficient (Leeward)	= -0.6, -0.6
Roof_WW	= Roof Coefficient (Windward)	= 0.07, -0.39
Cp_WW	= Windward Wall Coefficient (All L/B Values)	= 0.80
Cp_LW	= Leward Wall Coefficient Using L/B	= -0.50
Cp_SW	= Side Wall Coefficient (All L/B values)	= -0.70
GCpn_WW	= Parapet Combined Net Pressure Coefficient (Windward Parapet)	= 1.50
GCpn_LW	= Parapet Combined Net Pressure Coefficient (Leeward Parapet)	= -1.00

Wall Wind Pressures based On Positive Internal Pressure (+GCPi) - Normal to Ridge
All wind pressures include a load factor of 0.6

Elev ft	Kz	Kzt	qz psf	GCPi psf	Windward Press psf	Leeward Press psf	Side Press psf	Total Press psf	Minimum Pressure* psf
8.00	0.849	1.000	19.02	0.18	9.51	-11.51	-14.74	21.02	9.60

Wall Wind Pressures based on Negative Internal Pressure (-GCPi) - Normal to Ridge
All wind pressures include a load factor of 0.6

Elev ft	Kz	Kzt	qz psf	GCPi psf	Windward Press psf	Leeward Press psf	Side Press psf	Total Press psf	Minimum Pressure* psf
8.00	0.849	1.000	19.02	-0.18	16.36	-4.66	-7.89	21.02	9.60

Notes Wall Pressures:

Kz	= Velocity Press Exp Coeff	Kzt	= Topographical Factor
qz	= 0.00256*Kz*Kzt*Kd*V^2	GCPi	= Internal Press Coefficient
Side	= qh * G * Cp_SW - qip * +GCPi	Windward	= qz * G * Cp_WW - qip * +GCPi
Leeward	= qh * G * Cp_LW - qip * +GCPi	Total	= Windward Press - Leeward Press

* Minimum Pressure: Para 27.4.7 no less than 9.60 psf (Incl LF) applied to Walls
\+ Pressures Acting TOWARD Surface - Pressures Acting AWAY from Surface

Roof Wind Pressures for Positive & Negative Internal Pressure (+/- GCPi) - Normal to Ridge
All wind pressures include a load factor of 0.6

Roof Var	Start Dist ft	End Dist ft	Cp_min	Cp_max	GCPi	Pressure Pn_min* psf	Pressure Pp_min* psf	Pressure Pn_max psf	Pressure Pp_max psf
OH_Bot_-Y	N/A	N/A	0.800	0.800	0.000	12.93	12.93	12.93	12.93
OH_Top_+X+Y	N/A	N/A	-0.600	-0.600	0.000	-9.70	-9.70	-9.70	-9.70
OH_Top_+X-Y	N/A	N/A	0.070	-0.390	0.000	1.13	1.13	-6.30	-6.30
OH_Top_+Y	N/A	N/A	-0.600	-0.600	0.000	-9.70	-9.70	-9.70	-9.70
OH_Top_-X+Y	N/A	N/A	-0.600	-0.600	0.000	-9.70	-9.70	-9.70	-9.70
OH_Top_-X-Y	N/A	N/A	0.070	-0.390	0.000	1.13	1.13	-6.30	-6.30

OH_Top_-Y	N/A	N/A	0.070	-0.390	0.000	1.13	1.13	-6.30	-6.30
Roof_LW	N/A	N/A	-0.600	-0.600	0.180	-6.28	-13.12	-6.28	-13.12
Roof_WW	N/A	N/A	0.070	-0.390	0.180	4.56	-2.29	-2.88	-9.73

Notes Roof Pressures:
Start Dist = Start Dist from Windward Edge End Dist = End Dist from Windward Edge
Cp_Max = Largest Coefficient Magnitude Cp_Min = Smallest Coefficient Magnitude
Pp_max = qh*G*Cp_max - qip*(+GCPi) Pn_max = qh*G*Cp_max - qin*(-GCpi)
Pp_min* = qh*G*Cp_min - qip*(+GCPi) Pn_min* = qh*G*Cp_min - qin*(-GCPi)
OH = Overhang X = Dir along Ridge Y = Dir Perpendcular to Ridge Z = Vertical
* The smaller uplift pressures due to Cp_Min can become critical when wind is combined with roof live load or snow load; load combinations are given in ASCE 7
+ Pressures Acting TOWARD Surface - Pressures Acting AWAY from Surface

MWFRS Wind Parallel to Ridge (Ref Fig 27.4-1)

h	= Mean Roof Height Of Building	= 9.736 ft
RHt	= Ridge Height Of Roof	= 11.472 ft
B	= Horizontal Dimension Of Building Normal To Wind Direction	= 16.667 ft
L	= Horizontal Dimension Of building Parallel To Wind Direction	= 17.334 ft
L/B	= Ratio Of L/B used For Cp determination	= 1.040
h/L	= Ratio Of h/L used For Cp determination	= 0.562
Slope	= Slope of Roof	= 22.62 Deg
OH_Bot	= Overhang Bottom (Windward Face Only)	= 0.8, 0.8
OH_Top	= **Overhang Top Coeff (0 to h/2) (0.000 ft to 4.868 ft)	= -0.18, -0.928
OH_Top	= **Overhang Top Coeff (0 to h/2) (0.000 ft to 4.868 ft)	= -0.18, -0.928
OH_Top_1	= Overhang Top Coeff (h/2 to h) (4.868 ft to 9.736 ft)	= -0.18, -0.875
OH_Top_2	= Overhang Top Coeff (h/2 to h) (4.868 ft to 9.736 ft)	= -0.18, -0.875
OH_Top_3	= Overhang Top Coeff (h to 2h) (9.736 ft to 19.472 ft)	= -0.18, -0.525
OH_Top_4	= Overhang Top Coeff (h to 2h) (9.736 ft to 19.472 ft)	= -0.18, -0.525
OH_Top_5	= Overhang Top Coeff (h to 2h) (9.736 ft to 19.472 ft)	= -0.18, -0.525
OH_Top_6	= Overhang Top Coeff (h to 2h) (9.736 ft to 19.472 ft)	= -0.18, -0.525
OH_Top_7	= Overhang Top Coeff (>2h) (>19.472 ft)	= -0.18, -0.349
OH_Top_8	= Overhang Top Coeff (>2h) (>19.472 ft)	= -0.18, -0.349
Roof	= **Roof Coeff (0 to h/2) (0.000 ft to 4.868 ft)	= -0.18, -0.928
Roof_1	= Roof Coeff (h/2 to h) (4.868 ft to 9.736 ft)	= -0.18, -0.875
Roof_2	= Roof Coeff (h to 2h) (9.736 ft to 19.472 ft)	= -0.18, -0.525

**Includes Reduction Factor 0.87 For roof area, applied To Cp=-1.3 For h/L>=1 & (0 To h/2)

Cp_WW	= Windward Wall Coefficient (All L/B Values)	= 0.80
Cp_LW	= Leward Wall Coefficient Using L/B	= -0.49
Cp_SW	= Side Wall Coefficient (All L/B values)	= -0.70
GCpn_WW	= Parapet Combined Net Pressure Coefficient (Windward Parapet)	= 1.50
GCpn_LW	= Parapet Combined Net Pressure Coefficient (Leeward Parapet)	= -1.00

Wall Wind Pressures based On Positive Internal Pressure (+GCPi) - Parallel to Ridge
All wind pressures include a load factor of 0.6

Elev ft	Kz	Kzt	qz psf	GCPi psf	Windward Press psf	Leeward Press psf	Side Press psf	Total Press psf	Minimum Pressure* psf
11.47	0.849	1.000	19.02	0.18	9.51	-11.38	-14.74	20.89	9.60
9.74	0.849	1.000	19.02	0.18	9.51	-11.38	-14.74	20.89	9.60
8.00	0.849	1.000	19.02	0.18	9.51	-11.38	-14.74	20.89	9.60

Wall Wind Pressures based on Negative Internal Pressure (-GCPi) - Parallel to Ridge
All wind pressures include a load factor of 0.6

Elev ft	Kz	Kzt	qz psf	GCPi psf	Windward Press psf	Leeward Press psf	Side Press psf	Total Press psf	Minimum Pressure* psf
11.47	0.849	1.000	19.02	-0.18	16.36	-4.53	-7.89	20.89	9.60
9.74	0.849	1.000	19.02	-0.18	16.36	-4.53	-7.89	20.89	9.60
8.00	0.849	1.000	19.02	-0.18	16.36	-4.53	-7.89	20.89	9.60

Notes Wall Pressures:
Kz = Velocity Press Exp Coeff Kzt = Topographical Factor
qz = 0.00256*Kz*Kzt*Kd*V^2 GCPi = Internal Press Coefficient
Side = qh * G * Cp_SW - qip * +GCPi Windward = qz * G * Cp_WW - qip * +GCPi
Leeward = qh * G * Cp_LW - qip * +GCPi Total = Windward Press - Leeward Press
* Minimum Pressure: Para 27.4.7 no less than 9.60 psf (Incl LF) applied to Walls
+ Pressures Acting TOWARD Surface - Pressures Acting AWAY from Surface

Roof Wind Pressures for Positive & Negative Internal Pressure (+/- GCPi) - Parallel to Ridge
All wind pressures include a load factor of 0.6

Roof Var	Start Dist ft	End Dist ft	Cp_min	Cp_max	GCPi	Pressure Pn_min* psf	Pressure Pp_min* psf	Pressure Pn_max psf	Pressure Pp_max psf
OH_Bot	N/A	N/A	0.800	0.800	0.000	12.93	12.93	12.93	12.93

OH_Top (-X+Y)	0.000	4.868	-0.180	-0.928	0.000	-2.91	-2.91	-15.01	-15.01
OH_Top (-X-Y)	0.000	4.868	-0.180	-0.928	0.000	-2.91	-2.91	-15.01	-15.01
OH_Top (-Y)	0.000	4.868	-0.180	-0.928	0.000	-2.91	-2.91	-15.01	-15.01
OH_Top (+Y)	0.000	4.868	-0.180	-0.928	0.000	-2.91	-2.91	-15.01	-15.01
OH_Top_1 (-Y)	4.868	9.736	-0.180	-0.875	0.000	-2.91	-2.91	-14.15	-14.15
OH_Top_2 (+Y)	4.868	9.736	-0.180	-0.875	0.000	-2.91	-2.91	-14.15	-14.15
OH_Top_3 (+X+Y)	9.736	19.472	-0.180	-0.525	0.000	-2.91	-2.91	-8.48	-8.48
OH_Top_4 (+X-Y)	9.736	19.472	-0.180	-0.525	0.000	-2.91	-2.91	-8.48	-8.48
OH_Top_5 (-Y)	9.736	19.472	-0.180	-0.525	0.000	-2.91	-2.91	-8.48	-8.48
OH_Top_6 (+Y)	9.736	19.472	-0.180	-0.525	0.000	-2.91	-2.91	-8.48	-8.48
OH_Top_7 (+X+Y)	19.472	21.334	-0.180	-0.349	0.000	-2.91	-2.91	-5.65	-5.65
OH_Top_8 (+X-Y)	19.472	21.334	-0.180	-0.349	0.000	-2.91	-2.91	-5.65	-5.65
Roof (+Y)	0.000	4.868	-0.180	-0.928	0.180	0.51	-6.33	-11.59	-18.43
Roof_1 (+Y)	4.868	9.736	-0.180	-0.875	0.180	0.51	-6.33	-10.73	-17.57
Roof_2 (+Y)	9.736	19.472	-0.180	-0.525	0.180	0.51	-6.33	-5.06	-11.91

Notes Roof Pressures:
Start Dist = Start Dist from Windward Edge End Dist = End Dist from Windward Edge
Cp_Max = Largest Coefficient Magnitude Cp_Min = Smallest Coefficient Magnitude
Pp_max = qh*G*Cp_max - qip*(+GCPi) Pn_max = qh*G*Cp_max - qin*(-GCpi)
Pp_min* = qh*G*Cp_min - qip*(+GCPi) Pn_min* = qh*G*Cp_min - qin*(-GCPi)
OH = Overhang X = Dir along Ridge Y = Dir Perpendcular to Ridge Z = Vertical
* The smaller uplift pressures due to Cp_Min can become critical when wind is combined with roof live load or snow load; load combinations are given in ASCE 7
+ Pressures Acting TOWARD Surface - Pressures Acting AWAY from Surface

ANALYSIS & DESIGN:

Pages 1,000 - 1,999

250-A Main Street
Klamath Falls, OR. 97601

E-Mail: info@structure1.com
Web: www.structure1.com

ph. (541) 850-6300
fax (541) 850-6233

Precision Structural Engineering, Inc.
250 Main Street, Suite A • Klamath Falls, OR 97601
Tel (541) 850-6300 • FAX (541) 850-6233

Medford Office
836 Mason Way (off Sage Road) • Medford, OR 97501
Tel (541) 858-8500

www.structure1.com • Email: info@structure1.com

PROJECT NO. Romtec 220-57 SHEET 10000 OF

PROJECT NAME DESIGNED BY CSK DATE

SUBJECT Roof CHECKED BY DATE

Roof Decking

DL = 15 psf
SL = 30 psf

Spacing = 6" o.c.

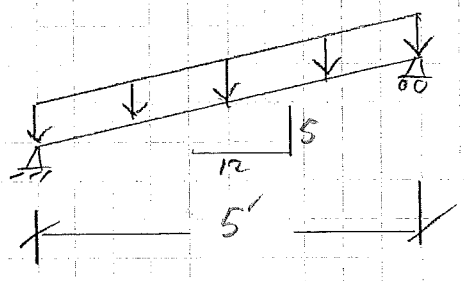

USE [2×6 DF-L #2 T&G]

Roof Beam

DL = 15 psf
SL = 30 psf

Trib. = 3.5'

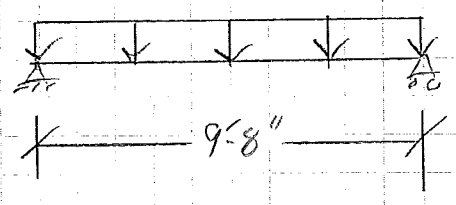

USE [Glulam-unbalan 24F-1.7E WS 5 1/8" x 6"]

1001

WoodWorks® SOFTWARE FOR WOOD DESIGN	COMPANY	PROJECT
	July 8, 2020 09:04	Roof Decking

Design Check Calculation Sheet

WoodWorks Sizer 2019

Loads:

Load	Type	Distribution	Pat-tern	Location [ft] Start	End	Magnitude Start	End	Unit
Dead Load	Dead	Full Area				15.00(6.0")		psf
Snow Load	Snow	Full Area				30.00(6.0")		psf
Self-weight	Dead	Full UDL				2.0		plf

Maximum Reactions (lbs), Bearing Capacities (lbs) and Bearing Lengths (in) :

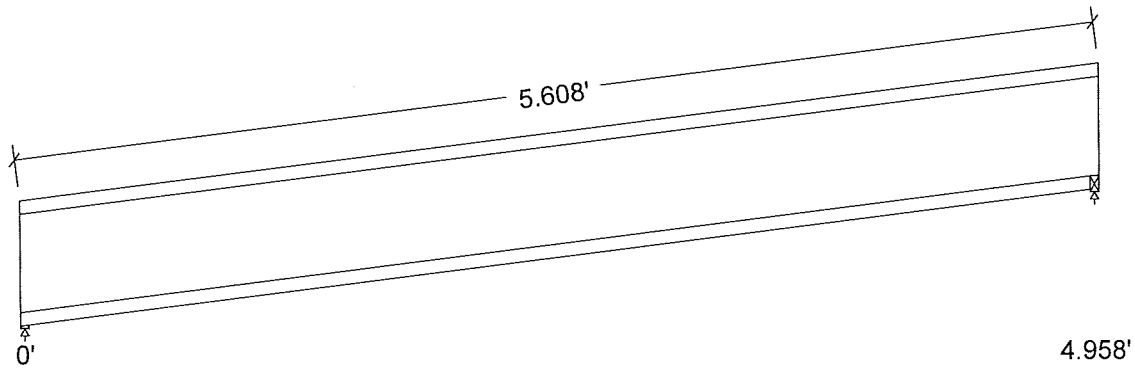

Unfactored:			
Dead	26		26
Snow	38		38
Factored:			
Total	63		63
Bearing:			
F'theta	690		690
Capacity			
Joist	1897		1897
Support	1836		1836
Des ratio			
Joist	0.03		0.03
Support	0.03		0.03
Load comb	#2		#2
Length	0.50*		0.50*
Min req'd	0.50*		0.50*
Cb	1.00		1.00
Cb min	1.00		1.00
Cb support	1.07		1.07
Fcp sup	625		625

*Minimum bearing length setting used: 1/2" for end supports

Roof Decking

Lumber-soft, D.Fir-L, No.2, 2x6 (1-1/2"x5-1/2")

Supports: All - Timber-soft Beam, D.Fir-L No.2

Roof joist spaced at 6.0" c/c; Total length: 5.61'; Clear span: 5.326'; Volume = 0.3 cu.ft.; Pitch: 5/12

Lateral support: top = continuous, bottom = continuous Oblique angle: 90.0 deg; Repetitive factor: applied where permitted (refer to online help);

This section PASSES the design code check.

Analysis vs. Allowable Stress and Deflection using NDS 2018 :

Criterion		Analysis Value	Design Value	Unit	Analysis/Design
Shear	x-x	fv = 0	Fv' = 207	psi	fv/Fv' = 0.00
	y-y	fv = 10	Fv' = 207	psi	fv/Fv' = 0.05
Bending(+)	x-x	fb = 0	Fb' = 1547	psi	fb/Fb' = 0.00
	y-y	fb = 451	Fb' = 1779	lbs-ft	fb/Fb' = 0.25
Live Defl'n		0.10 = L/666	0.36 = L/180	in	0.27
Total Defl'n		0.20 = L/329	0.36 = L/180	in	0.55

Additional Data:

FACTORS:	F/E(psi)	CD	CM	Ct	CL	CF	Cfu	Cr	Cfrt	Ci	Cn	LC#
Fvy'	180	1.15	1.00	1.00	-	-	-	-	1.00	1.00	-	2
Fby'	900	1.15	1.00	1.00	1.000	1.300	1.15	1.15	1.00	1.00	-	2
Fcp'	625	-	1.00	1.00	-	-	-	-	1.00	1.00	-	-
E'	1.6 million		1.00	1.00	-	-	-	-	1.00	1.00	-	2
Emin'	0.58 million		1.00	1.00	-	-	-	-	1.00	1.00	-	2

CRITICAL LOAD COMBINATIONS:

```
Shear      : LC #2  = D+S
Bending(+): LC #2  = D+S
Deflection: LC #2  = D+S  (live)
            LC #2  = D+S  (total)
Bearing    : Support 1 - LC #2 = D+S
             Support 2 - LC #2 = D+S
D=dead L=live S=snow W=wind I=impact Lr=roof live Lc=concentrated E=earthquake
All LC's are listed in the Analysis output
Load combinations: ASCE 7-16 / IBC 2018
```

CALCULATIONS:

```
V max = 58, V design = 55 lbs; M(+) = 78 lbs-ft
EIy = 2.47 lb-in^2
"Live" deflection is due to all non-dead loads (live, wind, snow…)
Total deflection = 1.5 dead + "live"
Bearing: Allowable bearing at an angle F'theta  calculated for each support
as per NDS 3.10.3
```

Design Notes:

1. WoodWorks analysis and design are in accordance with the ICC International Building Code (IBC 2018), the National Design Specification (NDS 2018), and NDS Design Supplement.
2. Please verify that the default deflection limits are appropriate for your application.
3. Sawn lumber bending members shall be laterally supported according to the provisions of NDS Clause 4.4.1.
4. SLOPED BEAMS: level bearing is required for all sloped beams.

WoodWorks® SOFTWARE FOR WOOD DESIGN	COMPANY	PROJECT
	July 8, 2020 09:17	Roof Beam

Design Check Calculation Sheet

WoodWorks Sizer 2019

Loads:

Load	Type	Distribution	Pat-tern	Location [ft] Start	End	Magnitude Start	End	Unit
Dead Load	Dead	Full Area				15.00(3.50')		psf
Snow Load	Snow	Full Area				30.00(3.50')		psf
Self-weight	Dead	Full UDL				6.0		plf

Maximum Reactions (lbs), Bearing Capacities (lbs) and Bearing Lengths (in) :

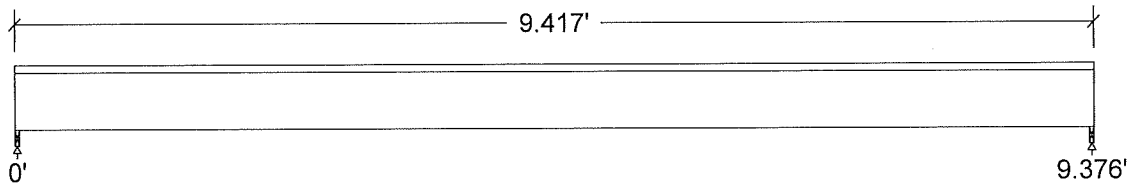

Unfactored:			
Dead	275		275
Snow	494		494
Factored:			
Total	770		770
Bearing:			
Capacity			
Beam	1281		1281
Support	1719		1719
Des ratio			
Beam	0.60		0.60
Support	0.45		0.45
Load comb	#2		#2
Length	0.50*		0.50*
Min req'd	0.50*		0.50*
Cb	1.00		1.00
Cb min	1.00		1.00
Cb support	1.07		1.07
Fcp sup	625		625

*Minimum bearing length setting used: 1/2" for end supports

Glulam-Unbalan., West Species, 24F-1.7E WS, 5-1/8"x6"

Supports: All - Timber-soft Beam, D.Fir-L No.2

Total length: 9.42'; Clear span: 9.334'; Volume = 2.0 cu.ft.; 4 laminations, 5-1/8" maximum width,

Lateral support: top = continuous, bottom = at supports;

This section PASSES the design code check.

Analysis vs. Allowable Stress and Deflection using NDS 2018 :

Criterion	Analysis Value	Design Value	Unit	Analysis/Design
Shear	fv = 33	Fv' = 241	psi	fv/Fv' = 0.14
Bending(+)	fb = 701	Fb' = 2760	psi	fb/Fb' = 0.25
Live Defl'n	0.12 = L/966	0.63 = L/180	in	0.19
Total Defl'n	0.21 = L/526	0.63 = L/180	in	0.34

Additional Data:

FACTORS:	F/E(psi)	CD	CM	Ct	CL	CV	Cfu	Cr	Cfrt	Notes	Cn*Cvr	LC#
Fv'	210	1.15	1.00	1.00	-	-	-	-	1.00	1.00	1.00	2
Fb'+	2400	1.15	1.00	1.00	1.000	1.000	-	-	1.00	1.00	-	2
Fcp'	500	-	1.00	1.00	-	-	-	-	1.00	-	-	-
E'	1.7 million		1.00	1.00	-	-	-	-	1.00	-	-	2
Eminy'	0.69 million		1.00	1.00	-	-	-	-	1.00	-	-	2

CRITICAL LOAD COMBINATIONS:

```
Shear     : LC #2  = D+S
Bending(+): LC #2  = D+S
Deflection: LC #2  = D+S  (live)
            LC #2  = D+S  (total)
Bearing   : Support 1 - LC #2 = D+S
            Support 2 - LC #2 = D+S
D=dead L=live S=snow W=wind I=impact Lr=roof live Lc=concentrated E=earthquake
All LC's are listed in the Analysis output
Load combinations: ASCE 7-16 / IBC 2018
```

CALCULATIONS:

```
V max = 766, V design = 681 lbs; M(+) = 1796 lbs-ft
EI = 156.82e06 lb-in^2
"Live" deflection is due to all non-dead loads (live, wind, snow…)
Total deflection = 1.5 dead + "live"
```

Design Notes:

1. WoodWorks analysis and design are in accordance with the ICC International Building Code (IBC 2018), the National Design Specification (NDS 2018), and NDS Design Supplement.
2. Please verify that the default deflection limits are appropriate for your application.
3. Glulam design values are for materials conforming to ANSI 117-2015 and manufactured in accordance with ANSI A190.1-2012
4. GLULAM: bxd = actual breadth x actual depth.
5. Glulam Beams shall be laterally supported according to the provisions of NDS Clause 3.3.3.
6. GLULAM: bearing length based on smaller of Fcp(tension), Fcp(comp'n).

Precision Structural Engineering, Inc.
250 Main Street, Suite A • Klamath Falls, OR 97601
Tel (541) 850-6300 • FAX (541) 850-6233

Medford Office
836 Mason Way (off Sage Road) • Medford, OR 97501
Tel (541) 858-8500

www.structure1.com • Email: info@structure1.com

PROJECT NO. Romt sC 270-57 SHEET 1005 OF

PROJECT NAME DESIGNED BY CSK DATE

SUBJECT Roof CHECKED BY DATE

P1: ~pg.

DL = 275 lb.
SL = 494 lb.

P2:

DL = 275 lb.
SL = 494 lb

P3:

DL = 275 lb.
SL = 494 lb.

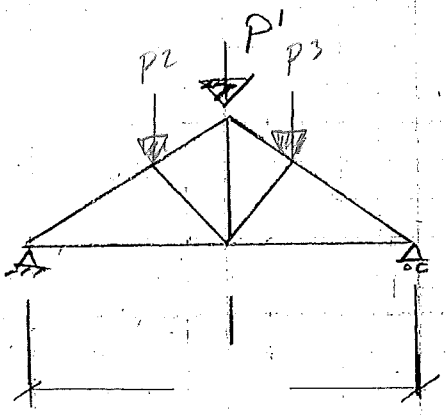

USE [6x8 DF-L #2]

Eave Connection

3/4"ø: Cap. // = 3.3 K/bolt
Cap. ∠ = 2.2 K/bolt

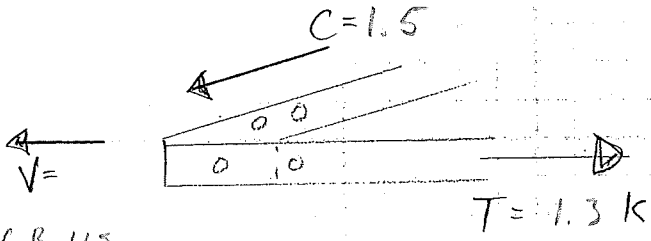

Bolt Req'd. = 1.3K/2.2 K/bolt = 0.6 Bolts

Use [1 - 3/4" ø Bolt]

Precision Structural Engineering, Inc.
250 Main Street, Suite A • Klamath Falls, OR 97601
Tel (541) 850-6300 • FAX (541) 850-6233

Medford Office
836 Mason Way (off Sage Road) • Medford, OR 97501
Tel (541) 858-8500

www.structure1.com • Email: info@structure1.com

PROJECT NO. _____ SHEET 1006 OF _____

PROJECT NAME _____ DESIGNED BY _____ DATE _____

SUBJECT Roof CHECKED BY _____ DATE _____

Ridge Connection

3/4"Ø: Cap. // = 3.3 K/bolt
Cap ∠ = 2.2 K/bolt

Bolt Reqd. = 0.5 K / 2.2 K/bolt = 0.2 Bolts

use [1 - 3/4"Ø Bolt]

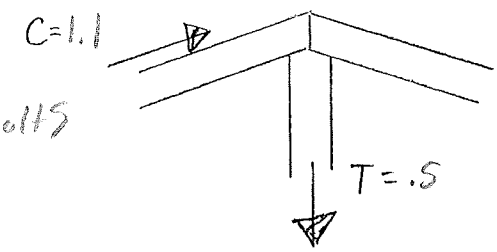

King Post to Bottom Chord

3/4"Ø: cap // = 3.3 K/bolt
cap. ⊥ = 1.9 K/bolt

Bolt Reqd. = 0.5 K / 1.9 K/bolt = 0.3 Bolts

use [1 - 3/4"Ø Bolt]

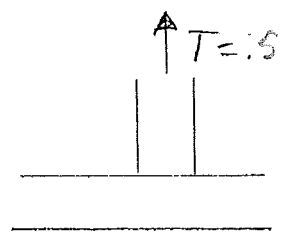

1007

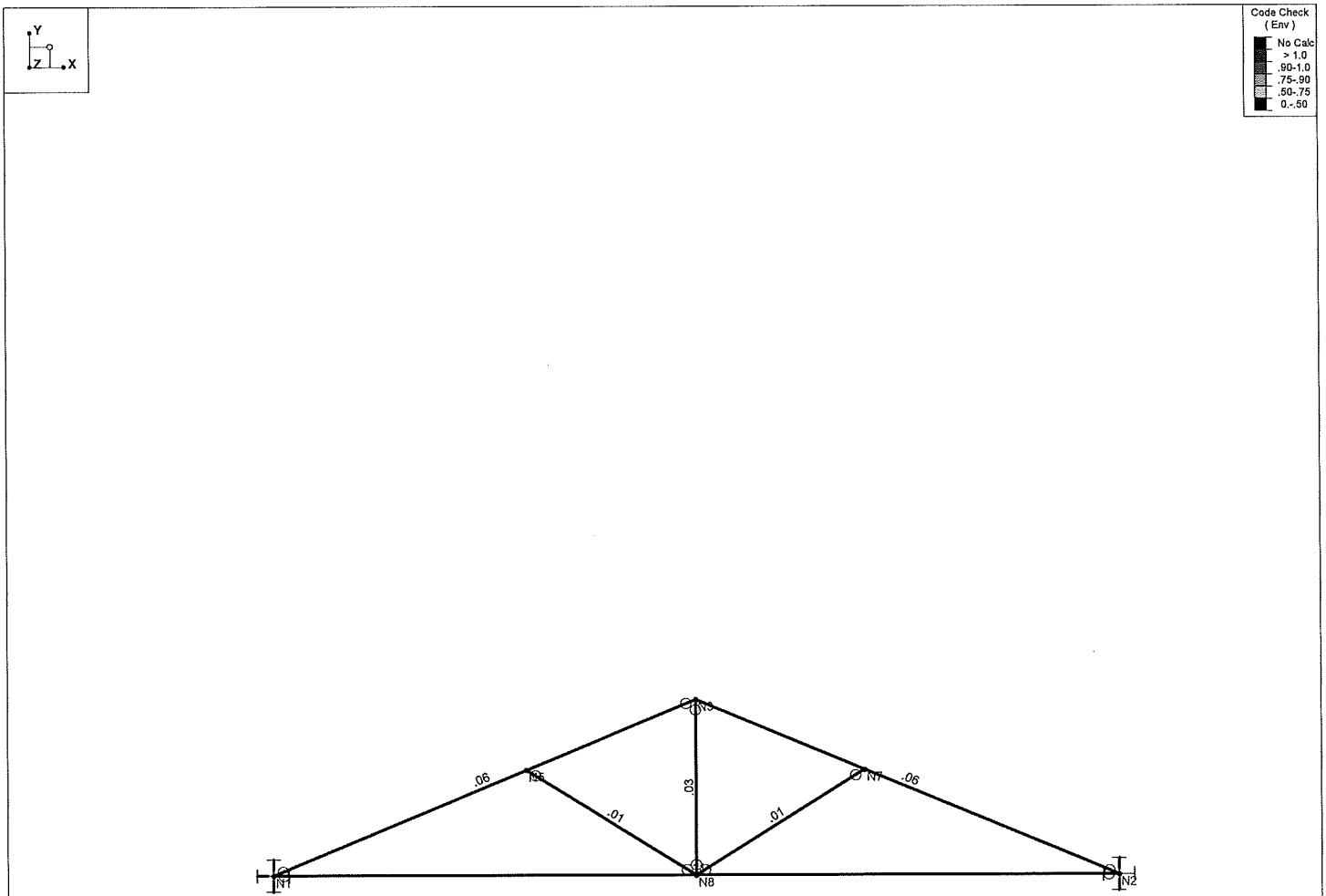

Member Code Checks Displayed (Enveloped)
Envelope Only Solution

PSE, Inc.	Porch Truss	SK - 1
CSK		July 9, 2020 at 8:41 AM
Romtec 220-57		2020-07-09 Porch Truss.r3d

1008

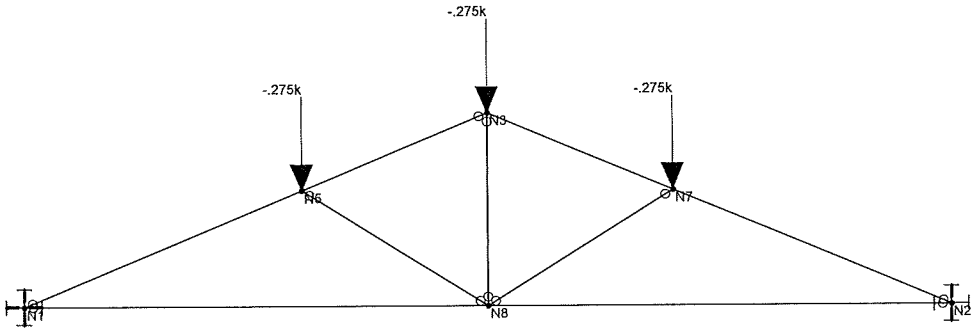

Loads: BLC 1, Dead
Envelope Only Solution

PSE, Inc.	Porch Truss	SK - 2
CSK		July 9, 2020 at 8:41 AM
Romtec 220-57		2020-07-09 Porch Truss.r3d

1009

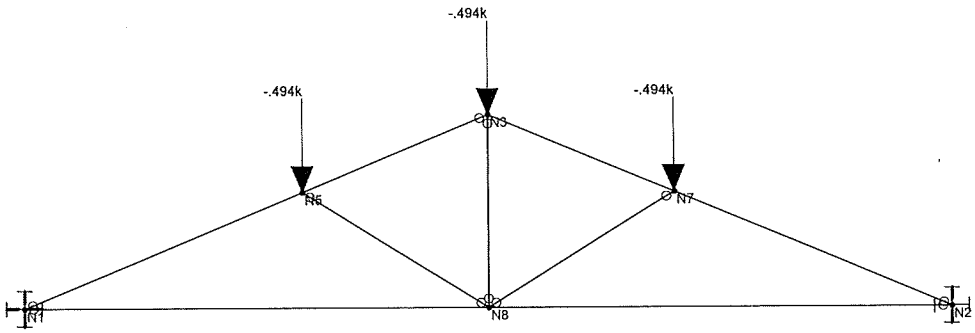

Loads: BLC 2, Snow
Envelope Only Solution

PSE, Inc.	Porch Truss	SK - 3
CSK		July 9, 2020 at 8:41 AM
Romtec 220-57		2020-07-09 Porch Truss.r3d

10/10

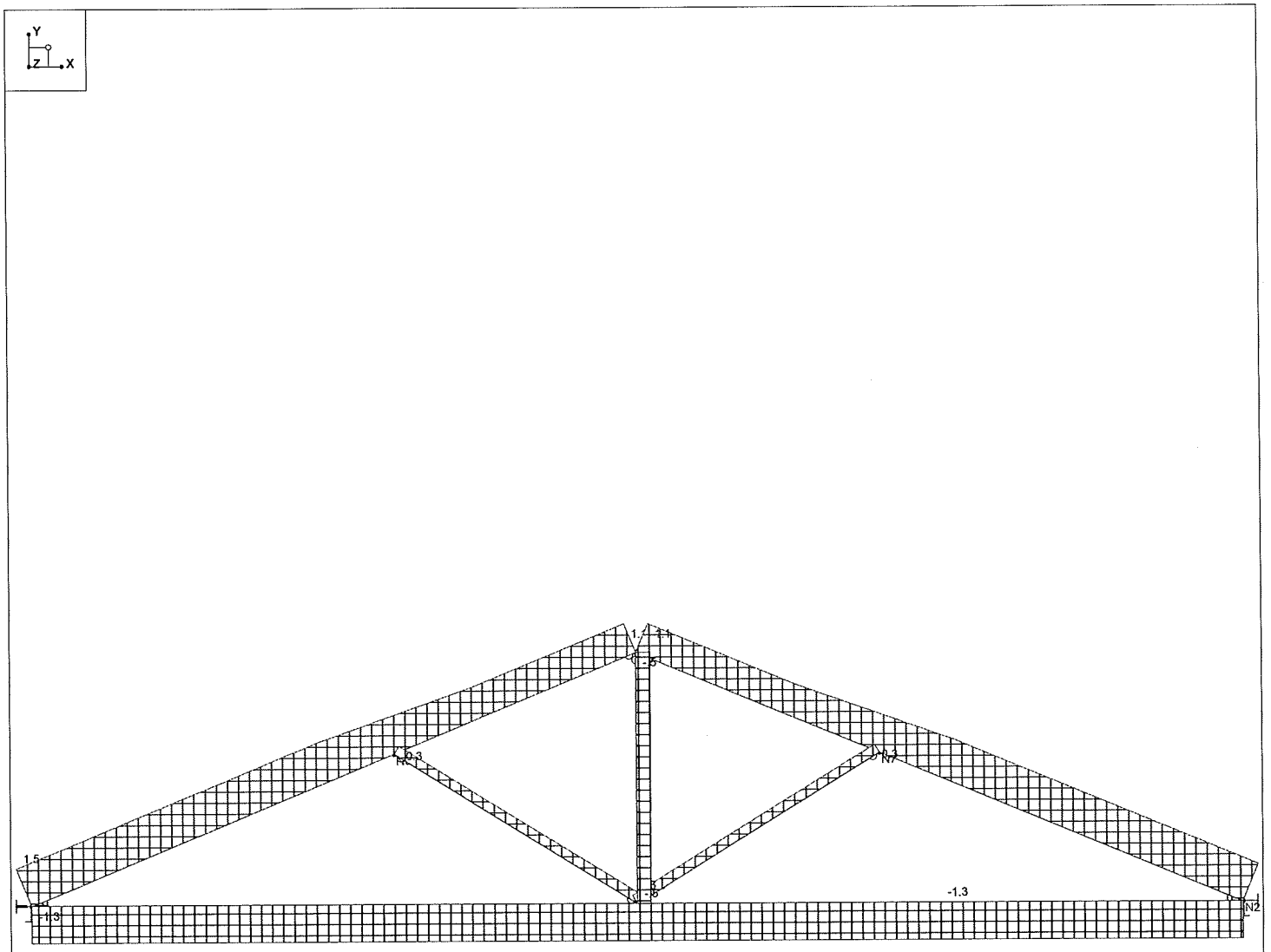

Envelope Only Solution
Member Axial Forces (k) (Enveloped)

PSE, Inc.	Porch Truss	SK - 4
CSK		July 9, 2020 at 9:20 AM
Romtec 220-57		2020-07-09 Porch Truss.r3d

RISA A NEMETSCHEK COMPANY

Company : PSE, Inc.
Designer : CSK
Job Number : Romtec 220-57
Model Name : Porch Truss

July 9, 2020
10:05 AM
Checked By:_____

Wood Material Properties

	Label	Type	Database	Species	Grade	Cm	Emod	Nu	Therm (\...	Dens[k/ft^3]
1	DF #2	Solid Sawn	Visually Gr..	Douglas Fir-Larch	No.2		1	.3	.3	.035
2	24F-1.8E DF U..	Glulam	NDS Table..	24F-1.8E_DF_UNB..	na		1	.3	.3	.035
3	DF #1	Solid Sawn	Visually Gr..	Douglas Fir-Larch	No.1		1	.3	.3	.035
4	DF S.S.	Solid Sawn	Visually Gr..	Douglas Fir-Larch	Select Structural		1	.3	.3	.035

Wood Section Sets

	Label	Shape	Type	Design List	Material	Design Rules	A [in2]	Iyy [in4]	Izz [in4]	J [in4]
1	Top Chord	6X8	Beam	Rectangular	DF #2	Typical	41.25	103.984	193.359	228.406
2	Bottom Chord	6X8	Beam	Rectangular	DF #2	Typical	41.25	103.984	193.359	228.406
3	Webbing	6X8	VBrace	Rectangular	DF #2	Typical	41.25	103.984	193.359	228.406

Wood Design Parameters

	Label	Shape	Length[ft]	le2[ft]	le1[ft]	le-bend to...	le-bend bo...	Kyy	Kzz	CV	Cr	y sway	z sway
1	M1	Top Chord	9.028	2		2		.92	.92				
2	M2	Top Chord	9.028	2		2		.92	.92				
3	M3	Bottom Ch..	16.667			Lbyy							
4	M6	Webbing	3.933			Lbyy							
5	M7	Webbing	3.933			Lbyy							
6	M8	Webbing	3.473			Lbyy							

Basic Load Cases

	BLC Description	Category	X Gravity	Y Gravity	Z Gravity	Joint	Point	Distributed	Area(Member)	Surface(Plate/...
1	Dead	DL		-1		3				
2	Snow	SL				3				

Load Combinations

	Description	Sol...	PD...	SR...	BLC	Fact...	BLC	Fact...	BLC	Fact...	BLC	Fact...	BLC	Fact...	BLC	Fact...	BLC	Fact...	BLC	Fact...	BLC	Fact...	BLC	Fact...
1	IBC 16-8	Yes	Y		DL	1																		
2	IBC 16-10 ..	Yes	Y		DL	1	SL	1																

Joint Loads and Enforced Displacements (BLC 1 : Dead)

	Joint Label	L,D,M	Direction	Magnitude[(k,k-ft), (in,rad), (k*s^2/ft...
1	N3	L	Y	-.275
2	N5	L	Y	-.275
3	N7	L	Y	-.275

Joint Loads and Enforced Displacements (BLC 2 : Snow)

	Joint Label	L,D,M	Direction	Magnitude[(k,k-ft), (in,rad), (k*s^2/ft...
1	N3	L	Y	-.494
2	N5	L	Y	-.494
3	N7	L	Y	-.494

Envelope Member Section Forces

	Member	Sec		Axial[k]	LC	y Shear[k]	LC	z Shear[k]	LC	Torque[k-...	LC	y-y Mome...	LC	z-z Mome...	LC
1	M1	1	max	3.3	2	.067	2	0	2	0	2	0	2	0	2
2			min	1.467	1	.041	1	0	1	0	1	0	1	0	1

Envelope Member Section Forces (Continued)

	Member	Sec		Axial[k]	LC	y Shear[k]	LC	z Shear[k]	LC	Torque[k-...	LC	y-y Mome...	LC	z-z Mome...	LC
3		2	max	3.291	2	.046	2	0	2	0	2	0	2	-.069	1
4			min	1.458	1	.02	1	0	1	0	1	0	1	-.128	2
5		3	max	3.282	2	.025	2	0	2	0	2	0	2	-.091	1
6			min	1.45	1	0	1	0	1	0	1	0	1	-.209	2
7		4	max	2.496	2	-.02	1	0	2	0	2	0	2	-.068	1
8			min	1.133	1	-.059	2	0	1	0	1	0	1	-.156	2
9		5	max	2.488	2	-.041	1	0	2	0	2	0	2	0	2
10			min	1.124	1	-.08	2	0	1	0	1	0	1	0	1
11	M2	1	max	3.299	2	.067	2	0	2	0	2	0	2	0	2
12			min	1.467	1	.041	1	0	1	0	1	0	1	0	1
13		2	max	3.291	2	.046	2	0	2	0	2	0	2	-.069	1
14			min	1.458	1	.02	1	0	1	0	1	0	1	-.128	2
15		3	max	3.282	2	.025	2	0	2	0	2	0	2	-.091	1
16			min	1.45	1	0	1	0	1	0	1	0	1	-.209	2
17		4	max	2.496	2	-.02	1	0	2	0	2	0	2	-.068	1
18			min	1.133	1	-.059	2	0	1	0	1	0	1	-.157	2
19		5	max	2.488	2	-.041	1	0	2	0	2	0	2	0	2
20			min	1.124	1	-.08	2	0	1	0	1	0	1	0	1
21	M3	1	max	-1.339	1	.054	2	0	2	0	2	0	2	0	2
22			min	-3.02	2	.041	1	0	1	0	1	0	1	0	1
23		2	max	-1.339	1	.012	2	0	2	0	2	0	2	-.085	1
24			min	-3.02	2	0	1	0	1	0	1	0	1	-.137	2
25		3	max	-1.339	1	.042	1	0	2	0	2	0	2	.004	1
26			min	-3.02	2	-.03	2	0	1	0	1	0	1	-.1	2
27		4	max	-1.338	1	0	1	0	2	0	2	0	2	-.085	1
28			min	-3.02	2	-.012	2	0	1	0	1	0	1	-.137	2
29		5	max	-1.338	1	-.041	1	0	2	0	2	0	2	0	2
30			min	-3.02	2	-.054	2	0	1	0	1	0	1	0	1
31	M6	1	max	.828	2	.017	2	0	2	0	2	0	2	0	2
32			min	.347	1	.017	1	0	1	0	1	0	1	0	1
33		2	max	.823	2	.008	2	0	2	0	2	0	2	-.012	2
34			min	.342	1	.008	1	0	1	0	1	0	1	-.012	1
35		3	max	.817	2	0	2	0	2	0	2	0	2	-.016	2
36			min	.336	1	0	1	0	1	0	1	0	1	-.016	1
37		4	max	.812	2	-.008	2	0	2	0	2	0	2	-.012	2
38			min	.331	1	-.008	1	0	1	0	1	0	1	-.012	1
39		5	max	.807	2	-.017	2	0	2	0	2	0	2	0	2
40			min	.326	1	-.017	1	0	1	0	1	0	1	0	1
41	M7	1	max	.828	2	.017	2	0	2	0	2	0	2	0	2
42			min	.347	1	.017	1	0	1	0	1	0	1	0	1
43		2	max	.822	2	.008	2	0	2	0	2	0	2	-.012	2
44			min	.342	1	.008	1	0	1	0	1	0	1	-.012	1
45		3	max	.817	2	0	2	0	2	0	2	0	2	-.016	2
46			min	.336	1	0	1	0	1	0	1	0	1	-.016	1
47		4	max	.812	2	-.008	2	0	2	0	2	0	2	-.012	2
48			min	.331	1	-.008	1	0	1	0	1	0	1	-.012	1
49		5	max	.807	2	-.017	2	0	2	0	2	0	2	0	2
50			min	.326	1	-.017	1	0	1	0	1	0	1	0	1
51	M8	1	max	-.48	1	0	2	0	2	0	2	0	2	0	2
52			min	-.963	2	0	1	0	1	0	1	0	1	0	1
53		2	max	-.488	1	0	2	0	2	0	2	0	2	0	2
54			min	-.971	2	0	1	0	1	0	1	0	1	0	1
55		3	max	-.497	1	0	2	0	2	0	2	0	2	0	2
56			min	-.98	2	0	1	0	1	0	1	0	1	0	1
57		4	max	-.506	1	0	2	0	2	0	2	0	2	0	2
58			min	-.989	2	0	1	0	1	0	1	0	1	0	1
59		5	max	-.514	1	0	2	0	2	0	2	0	2	0	2

Envelope Member Section Forces (Continued)

	Member	Sec		Axial[k]	LC	y Shear[k]	LC	z Shear[k]	LC	Torque[k-...	LC	y-y Mome...	LC	z-z Mome...	LC
60			min	-.997	2	0	1	0	1	0	1	0	1	0	1

Envelope Member Section Deflections Service

	Member	Sec		x [in]	LC	y [in]	LC	z [in]	LC	x Rotate [r...	LC	(n) L/y' Ratio	LC	(n) L/z' Ratio	LC
1	M1	1	max	0	2	0	2	0	2	0	2	NC	2	NC	2
2			min	0	1	0	1	0	1	0	1	NC	1	NC	1
3		2	max	0	1	-.007	1	0	2	0	2	NC	2	NC	2
4			min	-.002	2	-.015	2	0	1	0	1	NC	1	NC	1
5		3	max	-.001	1	-.012	1	0	2	0	2	NC	1	NC	2
6			min	-.003	2	-.026	2	0	1	0	1	9062.212	2	NC	1
7		4	max	-.002	1	-.014	1	0	2	0	2	NC	2	NC	2
8			min	-.005	2	-.03	2	0	1	0	1	NC	1	NC	1
9		5	max	-.003	1	-.013	1	0	2	0	2	NC	2	NC	2
10			min	-.006	2	-.029	2	0	1	0	1	NC	1	NC	1
11	M2	1	max	-.005	1	.004	2	0	2	0	2	NC	2	NC	2
12			min	-.01	2	.002	1	0	1	0	1	NC	1	NC	1
13		2	max	-.005	1	-.005	1	0	2	0	2	NC	2	NC	2
14			min	-.012	2	-.011	2	0	1	0	1	NC	1	NC	1
15		3	max	-.006	1	-.01	1	0	2	0	2	NC	1	NC	2
16			min	-.014	2	-.022	2	0	1	0	1	9063.286	2	NC	1
17		4	max	-.007	1	-.012	1	0	2	0	2	NC	2	NC	2
18			min	-.015	2	-.026	2	0	1	0	1	NC	1	NC	1
19		5	max	-.007	1	-.011	1	0	2	0	2	NC	2	NC	2
20			min	-.016	2	-.025	2	0	1	0	1	NC	1	NC	1
21	M3	1	max	0	2	0	2	0	2	0	2	NC	2	NC	2
22			min	0	1	0	1	0	1	0	1	NC	1	NC	1
23		2	max	.003	2	-.011	1	0	2	0	2	NC	1	NC	2
24			min	.001	1	-.022	2	0	1	0	1	8987.894	2	NC	1
25		3	max	.006	2	-.013	1	0	2	0	2	NC	1	NC	2
26			min	.002	1	-.03	2	0	1	0	1	6692.801	2	NC	1
27		4	max	.008	2	-.011	1	0	2	0	2	NC	1	NC	2
28			min	.004	1	-.022	2	0	1	0	1	8988.25	2	NC	1
29		5	max	.011	2	0	2	0	2	0	2	NC	2	NC	2
30			min	.005	1	0	1	0	1	0	1	NC	1	NC	1
31	M6	1	max	-.009	1	-.01	1	0	2	0	2	NC	2	NC	2
32			min	-.021	2	-.022	2	0	1	0	1	NC	1	NC	1
33		2	max	-.009	1	-.01	1	0	2	0	2	NC	2	NC	2
34			min	-.021	2	-.022	2	0	1	0	1	NC	1	NC	1
35		3	max	-.009	1	-.01	1	0	2	0	2	NC	2	NC	2
36			min	-.021	2	-.021	2	0	1	0	1	NC	1	NC	1
37		4	max	-.009	1	-.009	1	0	2	0	2	NC	2	NC	2
38			min	-.021	2	-.021	2	0	1	0	1	NC	1	NC	1
39		5	max	-.009	1	-.009	1	0	2	0	2	NC	2	NC	2
40			min	-.021	2	-.02	2	0	1	0	1	NC	1	NC	1
41	M7	1	max	-.005	1	-.013	1	0	2	0	2	NC	2	NC	2
42			min	-.011	2	-.028	2	0	1	0	1	NC	1	NC	1
43		2	max	-.005	1	-.012	1	0	2	0	2	NC	2	NC	2
44			min	-.011	2	-.028	2	0	1	0	1	NC	1	NC	1
45		3	max	-.005	1	-.012	1	0	2	0	2	NC	2	NC	2
46			min	-.011	2	-.027	2	0	1	0	1	NC	1	NC	1
47		4	max	-.005	1	-.012	1	0	2	0	2	NC	2	NC	2
48			min	-.012	2	-.027	2	0	1	0	1	NC	1	NC	1
49		5	max	-.005	1	-.012	1	0	2	0	2	NC	2	NC	2
50			min	-.012	2	-.026	2	0	1	0	1	NC	1	NC	1
51	M8	1	max	-.013	1	-.002	1	0	2	0	2	NC	2	NC	2

Envelope Member Section Deflections Service (Continued)

	Member	Sec		x [in]	LC	y [in]	LC	z [in]	LC	x Rotate [r...	LC	(n) L/y' Ratio	LC	(n) L/z' Ratio	LC
52			min	-.03	2	-.006	2	0	1	0	1	NC	1	NC	1
53		2	max	-.013	1	-.002	1	0	2	0	2	NC	2	NC	2
54			min	-.03	2	-.006	2	0	1	0	1	NC	1	NC	1
55		3	max	-.013	1	-.002	1	0	2	0	2	NC	2	NC	2
56			min	-.03	2	-.006	2	0	1	0	1	NC	1	NC	1
57		4	max	-.013	1	-.002	1	0	2	0	2	NC	2	NC	2
58			min	-.029	2	-.006	2	0	1	0	1	NC	1	NC	1
59		5	max	-.013	1	-.002	1	0	2	0	2	NC	2	NC	2
60			min	-.029	2	-.006	2	0	1	0	1	NC	1	NC	1

Envelope Joint Reactions

	Joint		X [k]	LC	Y [k]	LC	Z [k]	LC	MX [k-ft]	LC	MY [k-ft]	LC	MZ [k-ft]	LC
1	N5	max	0	2	0	2	0	2	0	2	0	2	0	2
2		min	0	1	0	1	0	1	0	1	0	1	0	1
3	N3	max	0	2	0	2	0	2	0	2	0	2	0	2
4		min	0	1	0	1	0	1	0	1	0	1	0	1
5	N7	max	0	2	0	2	0	2	0	2	0	2	0	2
6		min	0	1	0	1	0	1	0	1	0	1	0	1
7	N1	max	0	2	1.384	2	0	2	0	2	0	2	0	2
8		min	0	1	.643	1	0	1	0	1	0	1	0	1
9	N2	max	0	2	1.384	2	0	2	0	2	0	2	0	2
10		min	0	1	.643	1	0	1	0	1	0	1	0	1
11	Totals:	max	0	2	2.769	2	0	2						
12		min	0	1	1.287	1	0	1						

Envelope Wood Code Checks

	Member	Shape	Code ...	Loc[ft]	LC	Shear...	Loc[ft]	Dir	LC	Fc' [ksi]	Ft' [ksi]	Fb1' [...	Fb2' [...	Fv' [ksi]	RB	CL	CP	Eqn
1	M1	6X8	.102	0	2	.014	9.028	y	2	.788	.594	.935	.938	.213	5.183	.998	.9	3.6.3
2	M2	6X8	.102	0	2	.014	9.028	y	2	.788	.594	.935	.938	.213	5.183	.998	.9	3.6.3
3	M3	6X8	.159	5.382	2	.010	8.334	y	1	.271	.594	.933	.938	.153	7.042	.996	.31	3.9-1
4	M6	6X8	.024	0	2	.004	3.933	y	1	.843	.594	.937	.938	.153	3.421	.999	.964	3.6.3
5	M7	6X8	.024	0	2	.004	3.933	y	1	.843	.594	.937	.938	.153	3.421	.999	.964	3.6.3
6	M8	6X8	.041	3.473	2	.000	0	z	2	.851	.594	.937	.938	.213	3.214	.999	.972	3.9-1

Bolt Design Value (Z) Perpendicular to Grain

D (in.) =	0.75	NDS 11.3.6
F_{yb} (psi) =	45,000.00	NDS Tables 11A thru 11R
R_d I=	5.00	NDS Table 11.3.1B
R_d II =	4.50	NDS Table 11.3.1B
R_d III =	4.00	NDS Table 11.3.1B
l_m (in.) =	5.50	
l_s (in.) =	0.25	
F_{em} (psi) =	2,800.00	NDS Table 11.3.2
F_{es} (psi) =	87,000.00	NDS Table 11.3.2
R_e =	0.03	
R_t =	22.00	

k_1 =	0.30
k_2 =	0.51
k_3 =	15.13

Yeild Mode		Single Shear		Double Shear
I_m	Z (lb.) =	[redacted]	Z (lb.) =	2,310.00
I_s	Z (lb.) =	[redacted]	Z (lb.) =	6,525.00
II	Z (lb.) =	[redacted]		
III_m	Z (lb.) =	[redacted]		
III_s	Z (lb.) =	[redacted]	Z (lb.) =	1,954.07
IV	Z (lb.) =	[redacted]	Z (lb.) =	2,537.19

Note: Choose the smallest value from the yield limit equations as the nominal design value.

Bolt Design Value (Z) 35 degrees to Grain

D (in.) =	0.75	NDS 11.3.6
F_{yb} (psi) =	45,000.00	NDS Tables 11A thru 11R
R_d I=	4.39	NDS Table 11.3.1B
R_d II =	3.95	NDS Table 11.3.1B
R_d III =	3.51	NDS Table 11.3.1B
l_m (in.) =	5.50	
l_s (in.) =	0.25	
F_{em} (psi) =	4,214.00	NDS Table 11.3.2
F_{es} (psi) =	87,000.00	NDS Table 11.3.2
R_e =	0.05	
R_t =	22.00	

k_1 =	0.44
k_2 =	0.50
k_3 =	12.21

Yeild Mode		Single Shear		Double Shear
I_m	Z (lb.) =	[redacted]	Z (lb.) =	3,959.62
I_s	Z (lb.) =	[redacted]	Z (lb.) =	7,431.66
II	Z (lb.) =	[redacted]		
III_m	Z (lb.) =	[redacted]		
III_s	Z (lb.) =	[redacted]	Z (lb.) =	2,683.85
IV	Z (lb.) =	[redacted]	Z (lb.) =	3,519.51

Note: Choose the smallest value from the yield limit equations as the nominal design value.

Bolt Design Value (Z) Parallel to Grain

D (in.) =	0.75	NDS 11.3.6
F_{yb} (psi) =	45,000.00	NDS Tables 11A thru 11R
R_d I=	4.00	NDS Table 11.3.1B
R_d II =	3.60	NDS Table 11.3.1B
R_d III =	3.20	NDS Table 11.3.1B
l_m (in.) =	5.50	
l_s (in.) =	0.25	
F_{em} (psi) =	5,600.00	NDS Table 11.3.2
F_{es} (psi) =	87,000.00	NDS Table 11.3.2
R_e =	0.06	
R_t =	22.00	

k_1 =	0.58
k_2 =	0.50
k_3 =	10.52

Yeild Mode		Single Shear		Double Shear
I_m	Z (lb.) =	[redacted]	Z (lb.) =	5,775.00
I_s	Z (lb.) =	[redacted]	Z (lb.) =	8,156.25
II	Z (lb.) =	[redacted]		
III_m	Z (lb.) =	[redacted]		
III_s	Z (lb.) =	[redacted]	Z (lb.) =	3,342.77
IV	Z (lb.) =	[redacted]	Z (lb.) =	4,416.84

Note: Choose the smallest value from the yield limit equations as the nominal design value.

Precision Structural Engineering, Inc.
250 Main Street, Suite A • Klamath Falls, OR 97601
Tel (541) 850-6300 • FAX (541) 850-6233

Medford Office
836 Mason Way (off Sage Road) • Medford, OR 97501
Tel (541) 858-8500

www.structure1.com • Email: info@structure1.com

PROJECT NO. Rontec 220-57 SHEET 10/18 OF

PROJECT NAME DESIGNED BY CSK DATE

SUBJECT Roof CHECKED BY DATE

P: Door Header

DL = 275
SL = 494

M = 769/4 = 192 lb

V = 769/4 = 192/2 = 96 lb-ft

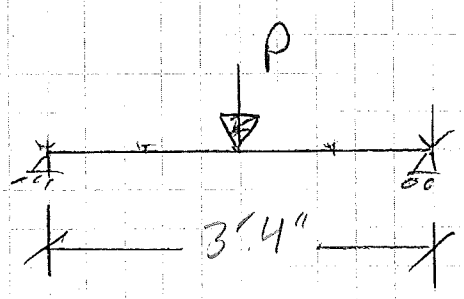

USE [6"x8" CMU w/ 1-#4 Bar]

PSE
PRECISION STRUCTURAL ENGINEERING

PROJECT :
CLIENT :
JOB NO. :
DATE :
PAGE :
DESIGN BY :
REVIEW BY :

Masonry Beam Design Based on TMS 402-16/13

INPUT DATA & DESIGN SUMMARY

SPECIAL INSPECTION (0=NO, 1=YES)			1	Yes
TYPE OF MASONRY (1=CMU, 2=BRICK)			1	CMU
MASONRY STRENGTH	f_m'	=	1.5	ksi
REBAR YIELD STRESS	f_y	=	60	ksi
ALLOWABLE INCREASING ? (IBC/CBC 1605.3.2)			No	
SERVICE SHEAR LOAD	V	=	0.096	k
SERVICE MOMENT LOAD	M	=	0.192	ft-k
WIDTH	b	=	6	in
EFFECTIVE DEPTH	d	=	6	in
CLEAR SPAN	Lc	=	3.334	ft
LOAD TYPE (1=SEISMIC, 0=WIND, 5=GRAVITY)			5	Gravity Only
VERTICAL REINF.	0 #	4	@	32 in o.c.
TENSION REINFORCEMENT		1	#	4

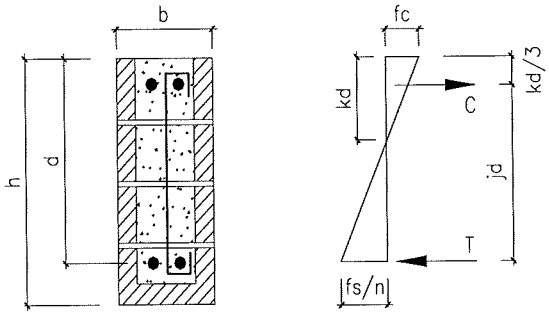

[THE BEAM DESIGN IS ADEQUATE.]

ANALYSIS

ALLOWABLE STRESS FACTOR	SF	=	1.000	
ALLOWABLE REINF. STRESS	(1.33 or 1.0) F_s	=	32	ksi
ALLOWABLE MASONRY STRESS	F_b=(SF)(0.33f_m')	=	0.495	ksi
MASONRY ELASTICITY MODULUS	E_m	=	1350	ksi, (TMS 402 4.2.2)
STEEL ELASTICITY MODULUS	E_s	=	29000	ksi, (TMS 402 4.2.2)
EFFECTIVE WIDTH	b_w	=	5.63	in [Satisfactory, Lc < 32 bw]
MODULAR RATIO	n	=	21.48	
TENSION REINFORCEMENT RATIO	ρ	=	0.006	

THE NEUTRAL AXIS DEPTH FACTOR IS

$$k = \sqrt{2\rho n + (\rho n)^2} - \rho n \quad = \quad 0.393$$

THE LEVER-ARM FACTOR IS

$$j = 1 - \frac{k}{3} \quad = \quad 0.869$$

THE TENSILE STRESS IN REINFORCEMENT DUE TO FLEXURE IS

$$f_s = \frac{M}{A_s jd} \quad = \quad 2.21 \text{ ksi} \quad < \quad F_s \quad \text{[SATISFACTORY]}$$

THE COMPRESSIVE STRESS IN THE EXTREME FIBER DUE TO FLEXURE IS

$$f_b = \frac{2M}{jkb_w d^2} \quad = \quad 0.07 \text{ ksi} \quad < \quad F_b \quad \text{[SATISFACTORY]}$$

THE SHEAR STRESS IN MASONRY IS

$$f_v = \frac{V}{b_w d} \quad = \quad 2.84 \text{ psi} \quad < \quad F_v = MIN\left[(SF)1.125\sqrt{f'_m} + 0.5\left(\frac{A_v F_s d}{A_n S}\right) \;,\; (SF)2\sqrt{f'_m}\right]$$

(TMS 402 8.3.5)

$$= \quad 43.5711 \text{ psi} \quad \text{[SATISFACTORY]}$$

Precision Structural Engineering, Inc.
250 Main Street, Suite A • Klamath Falls, OR 97601
Tel (541) 850-6300 • FAX (541) 850-6233

Medford Office
836 Mason Way (off Sage Road) • Medford, OR 97501
Tel (541) 858-8500

www.structure1.com • Email: info@structure1.com

PROJECT NO. Romtec 220-57 SHEET 1070 OF

PROJECT NAME DESIGNED BY CSK DATE

SUBJECT Floor CHECKED BY DATE

Masonry Bearing Wall

P: DL = 15 psf × 6'4" ft. = 95 plf
SL = 30 psf × 6'4" ft. = 190 plf

L: ~pg.
WL = 29.9 psf

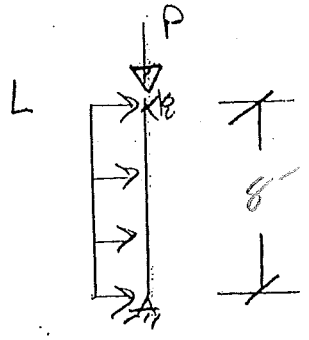

USE [6" CMU w/ #4 @ 32" o.c. vert. bars]

Continuous Wall Footing

DL = 15 psf × 6'4" ft. = 95 plf
SL = 30 psf × 6'4" ft. = 190 plf

Wall DL = 81 psf × 8' ft. = 648 plf

USE [18" w × 8" D Footing w/ 3 - #4 Bars]

PSE
PRECISION STRUCTURAL ENGINEERING

PROJECT :
CLIENT :
JOB NO. : Romtec 220-57 DATE :

PAGE :
DESIGN BY : CSK
REVIEW BY :

Lateral Force for One-Story Wall Based on ASCE 7-16 & 2015 IBC

INPUT DATA

WALL THICKNESS	t	=	8	*in, (203 mm)*
PARAPET HEIGHT	h_p	=	0	*ft, (0.0 m)*
WALL HEIGHT	h	=	8	*ft, (2.4 m)*
TOTAL WALL DENSITY	ρ =	125	lbs/ft^3	*(2001 kg/m^3)*
SEISMIC PARAMETER	S_{DS}	=	0.191	(ASCE 7 Sec 11.4)
SEISMIC DESIGN CATEGOR'	SDC	=	D	
DIAPHRAGM FLEXIBLE ? (0=no, 1=yes)			1	Yes
SEISMIC IMPORTANCE FACTOR	I_e	=	1	(ASCE 7 Tab 11.5-1)
WIND IMPORTANCE FACTOR	I_w	=	1.0	(ASCE 7 Tab 1.5-2)
BASIC WIND SPEED	V =	131	*mph, (211 kph), (ASCE 7 Sec 26.5.1)*	
EXPOSURE CATEGORY (B, C, D)		=	C	
TOPOGRAPHIC FACTOR	K_{Zt}	=	1	Flat, (ASCE 7 Tab 26.8-1)

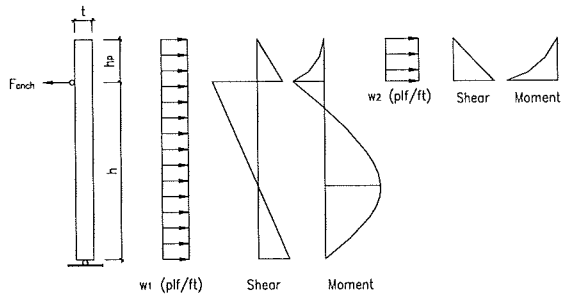

DESIGN SUMMARY

Out-of-plane force for wall design w_1 = 29.9 psf (Wind governs) , *(1432 N/m^2)*
Out-of-plane force for parapet design w_2 = 68.2 psf (Wind governs) , *(3265 N/m^2)*
Out-of-plane force for anchorage design F_{anch} = 196 plf (Horizontal direction) , *(2858 N/m)*
(The governing seismic & wind forces have been reduced by 0.7 & 0.6 for ASD)

WIND ANALYSIS

Out-of-plane wind force for wall design (ASCE 7-16 Eq. 30.3-1)

$$w_{1,wind} = 0.6q_h\left[(GC_P)-(GC_{Pi})\right] = \left(0.00256K_hK_{Zt}K_dK_eV^2\right)\left[(GC_P)-(GC_{Pi})\right] = 29.9 \text{ psf}$$

Where : K_h = 0.85 , K_d = 0.85 , GC_p = -1.39 , GC_{pi} = 0.18
(mean roof h = 8 ft, changeable) K_e = 1.00 (corner ? Yes , TA = 10.67 ft^2) (ASCE 7-16 Tab. 26.13-1)
(ASCE 7-16 26.10-1) (ASCE 7-16 30.3.2)

Out-of-plane wind force for parapet design (ASCE 7-16 Eq. 30.8-1)

$$w_{2,wind} = 0.6q_p\left[(GC_P)-(GC_{Pi})\right] = \left(0.00256K_hK_{Zt}K_dK_eV^2\right)\left[(GC_P)-(GC_{Pi})\right] = 68.2 \text{ psf, (ASCE 7-16 30.8)}$$

Where : K_h = 0.85 , K_d = 0.85 , GC_p = -1.40 , GC_p = -2.40 GC_{pi} = 0.18
(ASCE 7-16 26.10-1) (ASCE 7-16 26.10-1) = 1.00 roof, (ASCE 7-16 30.3.2) (ASCE 7-16 Tab. 26.13-1)
(TA = 0 ft^2)
wall, (ASCE 7-16 30.3.2)

Out-of-plane wind force for anchorage design

$$F_{anch,wind} = \frac{h}{2}w_{1,wind} + h_p\left(1+\frac{h_p}{2h}\right)w_{2,wind} = 120 \text{ plf (Horizontal)}$$

SEISMIC ANALYSIS

Out-of-plane seismic force for wall design (ASCE 7, Sec.12.11.1)

$$w_{1,seismic} = MAX\left(0.4IS_{DS}W_p \ , 0.1W_p\right) = 0.10\ W_p = 8.3 \text{ psf}$$

Where : W_p = 83.3 psf , I_e = 1.0
(CBC/IBC Tab 1604.5 & ASCE 7 Tab 1.5-2)

Out-of-plane seismic force for parapet design (ASCE 7, Sec. 13.3.1)

$$w_{2,seismic} = MAX\left[0.3S_{DS}I_pW_p \ , \ MIN\left(\frac{1.2a_pS_{DS}I_pW_p}{R_p} \ , \ 1.6S_{DS}I_pW_p\right)\right] = 0.23\ W_p = 19.1 \text{ psf}$$

Where : a_p = 2.5 , I_p = 1.0 , R_p = 2.5
(ASCE 7 Tab. 13.5-1) (ASCE 7 Sec. 13.1.3) (ASCE 7 Tab. 13.5-1)

Out-of-plane seismic force for anchorage design

For masonry or concrete under seismic design category A & B, both flexible & rigid diaphragm (ASCE 7 Sec. 12.11.2)

$$F_{anch,seismic} = MAX\left[0.4S_{DS}IW_p\frac{(h+h_p)^2}{2h} \ , \ 0.1W_p\frac{(h+h_p)^2}{2h} \ , \ 400S_{DS}I \ , \ F_{min}\right] = 3.36\ W_p = 280 \text{ plf (Horizontal)}$$

(Not applicable)

Where : F_{min} = 280 plf
(ASCE 7 Sec. 12.11.2 & 11.7.3)

For seismic design category C and above, flexible diaphragm (ASCE 7 Sec. 12.11.2.1)

$$F_{anch,seismic} = MAX\left[0.8S_{DS}IW_p\frac{(h+h_p)^2}{2h} \ , \ 0.1W_p\frac{(h+h_p)^2}{2h} \ , \ 400S_{DS}I \ , \ F_{min}\right] = 3.36\ W_p = 280 \text{ plf (Horizontal)}$$

(Applicable)

For seismic design category C and above, rigid diaphragm (ASCE 7 Sec. 12.11.2 & Sec. 13.3.1)

$$F_{anch,seismic} = MAX\left\{MAX\left[0.4S_{DS}I_p \ , \ MIN\left(\frac{1.2a_pS_{DS}I_p}{R_p} \ , \ 1.6S_{DS}I_p\right)\right]W_p\frac{(h+h_p)^2}{2h} \ , \ 400S_{DS}I \ , \ F_{min}\right\}$$

= 3.36 W_p = 280 plf (Horizontal) (Not applicable)

Where : a_p = 1.0 R_p = 1.5
(ASCE 7 Tab. 13.5-1) (1.5, ASCE 7 13.4.2 or 2.5, ASCE 7 Tab 13.5-1)

1022

PSE
PRECISION STRUCTURAL ENGINEERING

PROJECT :
CLIENT :
JOB NO. : Romtec 220-57 DATE :

PAGE :
DESIGN BY : CSK
REVIEW BY :

Allowable Stress Design of Masonry Bearing Wall Based on TMS 402-16/13 & 2015 IBC

INPUT DATA & DESIGN SUMMARY

SPECIAL INSPECTION (0=NO, 1=YES)			1	Yes
TYPE OF MASONRY (1=CMU, 2=BRICK)			1	CMU
MASONRY STRENGTH	f_m'	=	1.5	ksi
REBAR YIELD STRESS	f_y	=	60	ksi
ALLOWABLE INCREASING ? (IBC/CBC 1605.3.2)			Yes	
SERVICE GRAVITY LOAD	P	=	285	lbs / ft
SERVICE LATERAL LOAD	w_1	=	29.9	plf / ft
SERVICE PARAPET LOAD	w_2	=	0	plf / ft
THICKNESS OF WALL	t	=	6	in
PARAPET HEIGHT	h_p	=	0	ft
WALL HEIGHT	h	=	8	ft
ECCENTRICITY	e	=	0	in
MASONRY SPECIFIC WEIGHT	γ_m	=	125	pcf

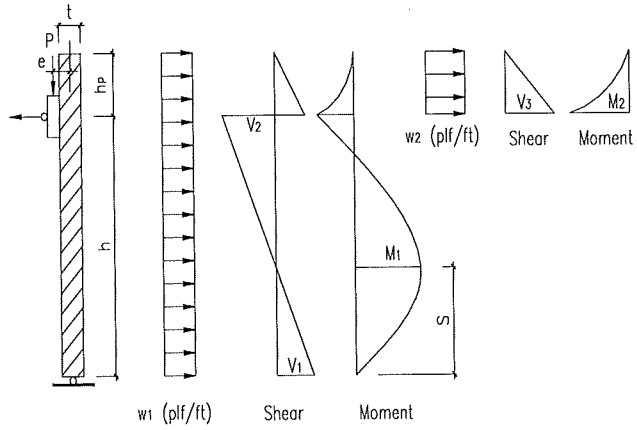

[THE WALL DESIGN IS ADEQUATE.]

WALL HORIZ. REINF.	1	#	4	@	32	in o.c. (at middle)
WALL VERT. REINF.	1	#	4	@	32	in o.c. (at middle)

ANALYSIS

VERT. REINF. AREA AT EACH SIDE	A_s	=	0.08	in^2
EFFECTIVE DEPTH (TMS 402 6.1.3.5)	d	=	2.82	in
WIDTH OF SECTION	b_w	=	12.00	in
EFFECTIVE THICKNESS	t_e	=	5.63	in
MASONRY ELASTICITY MODULUS	E_m	=	1350	ksi
STEEL ELASTICITY MODULUS	E_s	=	29000	ksi

MODULAR RATIO	n	=	21.48
REINFORCEMENT RATIO	ρ	=	0.0022
ALLOWABLE STRESS FACTOR	SF	=	1.333

THE NEUTRAL AXIS DEPTH FACTOR IS

$$k=\sqrt{2\rho n+(\rho n)^2}-\rho n \quad = 0.26482$$

THE ALLOWABLE STRESS DUE TO FLEXURE IS

$$F_b=(SF)(0.33f'_m)= \quad 660 \quad \text{psi}$$

THE ALLOWABLE REINF. STRESS DUE TO FLEXURE IS

$$F_s=(1.33 \;\; or \;\; 1.0)(20) \;\; or \;\; 32= \quad 32000 \text{ psi}$$

THE DISTANCE FROM BOTTOM TO M_1 IS

$$S=h+h_p-\left[\frac{(h+h_p)^2}{2h}-\frac{Pe}{hw_1}\right] = 4.0 \quad \text{ft}$$

THE GOVERNING MOMENTS AND AXIAL FORCES ARE

$$M_1=\frac{1.05}{2w_1h^2}\left[Pe+\frac{w_1}{2}(h^2-h_p^2)\right]^2 = 251 \quad \text{ft-lbs/ft}$$

$$P_1=P+(wall \;\; weight) = 535 \quad \text{lbs / ft}$$

$$M_2=\frac{w_2h_p^2}{2} = 0 \quad \text{ft-lbs/ft}$$

$$P_2=P+(wall \;\; weight) = 285 \quad \text{lbs / ft}$$

THE GOVERNING SHEAR FORCES ARE

$$V_1=(h+h_p)w_1-\frac{(h+h_p)^2w_1}{2h}+\frac{Pe}{h} = 120 \quad \text{lbs / ft}$$

$$V_2=hw_1-V_1 = 120 \quad \text{lbs / ft}$$

$$V_3=h_pw_2 = 0 \quad \text{lbs / ft}$$

THE GOVERNING SHEAR STRESS IN MASONRY IS

$$f_v=\frac{MAX(V_1 \;,\; V_2 \;,\; V_3)}{t_eb_w} = 1.77 \quad \text{psi}$$

DETERMINE THE REGION FOR FLEXURE AND AXIAL LOAD (MDG-3 Tab 12.2.1, Fig 12.2-12 & 13, page 12-25).

$$\frac{M}{Pd}\le\frac{t_e}{6d} \qquad \frac{M}{Pd}\le\left(\frac{t_e}{2d}-\frac{1}{3}\right) \qquad \frac{M}{Pd}>\left(\frac{t_e}{2d}-\frac{1}{3}\right)$$

1. Wall is in compression and not cracked.
2. Wall is cracked but steel is in compression.
3. Wall is cracked and steel is in tension.

REGION 3 APPLICABLE FOR (M1, P1)

REGION 1 APPLICABLE FOR (M2, P2)

(cont'd)

CHECK REGION 1 CAPACITY

$$M_m = \frac{b_w t_e^2}{6} F_b - P\frac{t_e}{6} = \begin{cases} 3445 \text{ ft-lbs / ft} > M_1 & \text{[Not applicable]} \\ 3464 \text{ ft-lbs / ft} > M_2 & \text{[Satisfactory]} \end{cases}$$

CHECK REGION 2 CAPACITY

$$M_m = P\frac{t_e}{2} - \frac{2P^2}{3b_w F_b} = \begin{cases} 123 \text{ ft-lbs / ft} < M1 & \text{[Not applicable]} \\ 66 \text{ ft-lbs / ft} > M2 & \text{[Not applicable]} \end{cases}$$

CHECK REGION 3 CAPACITY (The moment maybe limited by either the masonry compression or steel tension, MDG-3 page 12-25).

$$M_m = MIN\left[\frac{1}{2} b_w kd F_b\left(d - \frac{kd}{3}\right) - P\left(d - \frac{t_e}{2}\right) \;,\; A_s F_s\left(d - \frac{kd}{3}\right) + P\left(\frac{t_e}{2} - \frac{kd}{3}\right)\right]$$

$$= \begin{cases} 628 \text{ ft-lbs / ft} > M_1 & \text{[Satisfactory]} \\ 574 \text{ ft-lbs / ft} > M_2 & \text{[Not applicable]} \end{cases}$$

THE ALLOWABLE SHEAR STRESS IS GIVEN BY (TMS 402 8.2.6)

$$F_v = (SF)1.125\left(\sqrt{f'_m}\right) = 58.095 \text{ psi} > f_v \quad \text{[Satisfactory]}$$

Technical References:

1. "Masonry Designers' Guide, Third Edition" (MDG-3), The Masonry Society, 2001.

PSE
PRECISION STRUCTURAL ENGINEERING

PROJECT :
CLIENT :
JOB NO. :
DATE :
PAGE :
DESIGN BY :
REVIEW BY :

Footing Design for Stud Bearing Wall Based on 2015 IBC / ACI 318-14

INPUT DATA & DESIGN SUMMARY

FOOTING SIZE	A	=	24	in
	B	=	8	in
	C	=	18	in
	D	=	8	in
	E	=	5	in
FOOTING CONCRETE STRENGTH	fc'	=	2.5	ksi
AXIAL DEAD LOAD (per linear foot)	P_{DL}	=	0.648	k / ft
AXIAL LIVE LOAD (per linear foot)	P_{LL}	=	0.19	k / ft
LATERAL LOAD (0=WIND, 1=SEISMIC)		=	1	Seismic,SD
LATERAL LOAD (per linear foot)	P_{LAT}	=	1	k / ft, SD
(holdown force converted to load per linear foot)				
SURCHARGE	q_s	=	0.1	ksf
SOIL WEIGHT	w_s	=	0.11	kcf
ALLOWABLE SOIL PRESSURE	Q_a	=	1.5	ksf

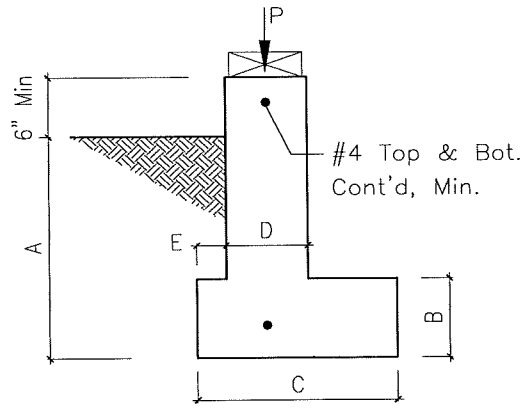

THE FOOTING DESIGN IS ADEQUATE.

ANALYSIS

DESIGN LOADS (IBC 1605.3.2 & ACI 318 5.3)

CASE 1:	DL + LL	P	=	0.84	k / ft	1.2 DL + 1.6 LL	Pu	=	1.08	k / ft
CASE 2:	DL + LL + E / 1.4	P	=	1.55	k / ft	1.2 DL + 1.0 LL + 1.0 E	Pu	=	1.97	k / ft
CASE 3:	0.9 DL + E / 1.4	P	=	1.30	k / ft	0.9 DL + 1.0 E	Pu	=	1.58	k / ft

CHECK SOIL BEARING CAPACITY (ACI 318 13.3.1.1)

Service Loads	CASE 1	CASE 2	CASE 3	
P	0.84	1.55	1.30	k / ft
e	0.0	0.0	0.0	in (from center of footing)
q_s C	0.15	0.15	0.15	k / ft, (surcharge load)
(0.15-w_s) Area	0.09	0.09	0.09	k / ft, (footing increased)
Σ P	1.1	1.8	1.5	k / ft
e	0.0	0.0	0.0	in
q_{max}	0.72	1.19	1.02	ksf
Q_a	1.50	1.50	1.50	ksf

Where

$$q_{max} = \begin{cases} \dfrac{(\Sigma P)\left(1+\dfrac{6e}{C}\right)}{C}, & for \quad e \le \dfrac{C}{6} \\ \dfrac{2(\Sigma P)}{3(0.5C-e)}, & for \quad e > \dfrac{C}{6} \end{cases}$$

[Satisfactory]

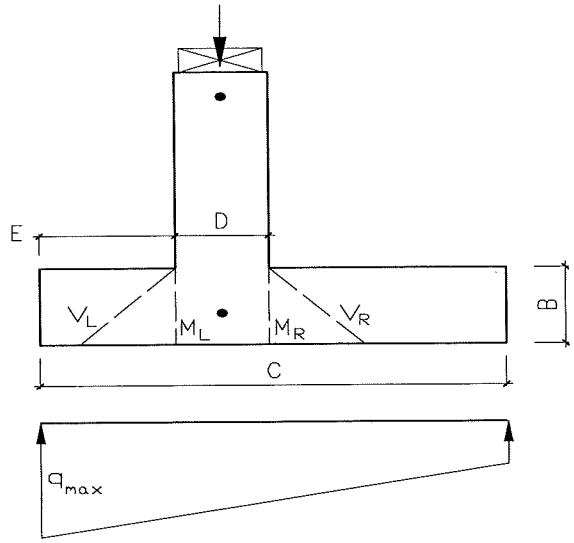

DESIGN FOR FLEXURE (ACI 318 14.5)

$$\phi M_n = MIN\left(5\lambda\phi\sqrt{f'_c}S,\ 0.85\phi f'_c S\right) = 1.60 \text{ ft-kips / ft}$$

where
λ = 1.0 (ACI 318 19.2.4)
ϕ = 0.6 (ACI 318 21.2)
S = elastic section modulus of section
= 128 in^3/ ft

(cont'd)

FACTORED SOIL PRESSURE

Factored Loads	CASE 1	CASE 2	CASE 3	
P_u	1.1	2.0	1.6	k / ft
e_u	0.0	0.0	0.0	in (from center of footing)
$\gamma q_s C$	0.24	0.24	0.24	k / ft, (factored surcharge load)
γ[0.15AC - (0.15-Ws) (C-D) (A-B)]	0.49	0.49	0.37	k / ft, (factored footing & backfill loads)
ΣP_u	1.81	2.69	2.19	k / ft
e_u	0.0	0.0	0.0	in
E	5.0	5.0	5.0	in
$q_{u,\ max}$	1.21	1.80	1.46	ksf
$q_{u,\ VL}$	1.21	1.80	1.46	ksf
$q_{u,\ ML}$	1.21	1.80	1.46	ksf
$q_{u,\ MR}$	1.21	1.80	1.46	ksf
$q_{u,\ VR}$	1.21	1.80	1.46	ksf
$q_{u,\ min}$	1.21	1.80	1.46	ksf
$M_{u,\ L}$	0.07	0.12	0.09	ft-k / ft
$M_{u,\ R}$	0.07	0.12	0.09	ft-k / ft
$V_{u,\ L}$	0.00	0.00	0.00	k / ft
$V_{u,\ R}$	0.00	0.00	0.00	k / ft

$M_{u,\ max}$ = 0.12 ft-k / ft < ϕM_n [Satisfactory]

CHECK FLEXURE SHEAR (ACI 318 14.5)

$$\phi V_n = \frac{4}{3}\lambda\phi\sqrt{f'_c}B = 3.84 \text{ k / ft}$$

where ϕ = 0.6 (ACI 318 21.2)

$V_{u,\ max}$ = 0.00 k / ft < ϕV_n [Satisfactory]

Precision Structural Engineering, Inc.
250 Main Street, Suite A • Klamath Falls, OR 97601
Tel (541) 850-6300 • FAX (541) 850-6233

Medford Office
836 Mason Way (off Sage Road) • Medford, OR 97501
Tel (541) 858-8500

www.structure1.com • Email: info@structure1.com

PROJECT NO. Romtec 220-57 SHEET 1026 OF

PROJECT NAME DESIGNED BY CSK DATE

SUBJECT Floor CHECKED BY DATE

Porch Posts

P: ~pg.

DL = 643 lb
SL = 741 lb

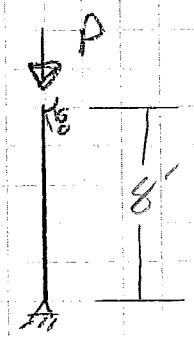

USE [6x6 DF-L #2]

Porch Footings

P: ~pg.

DL = 700 lb
L = 741 lb

USE [24" x 24" x 12" Footing w/ 3 - #4 Bars]

1027

WoodWorks® SOFTWARE FOR WOOD DESIGN	COMPANY	PROJECT
	July 9, 2020 10:09	2020-07-09 Porch Posts

Design Check Calculation Sheet

WoodWorks Sizer 2019

Loads:

Load	Type	Distribution	Location [ft] Start End	Magnitude Start End	Unit
Dead Load	Dead	Axial	(Ecc. = 0.92")	643	lbs
Snow Load	Snow	Axial	(Ecc. = 0.92")	741	lbs
Self-weight	Dead	Axial		57	lbs

Reactions (lbs):

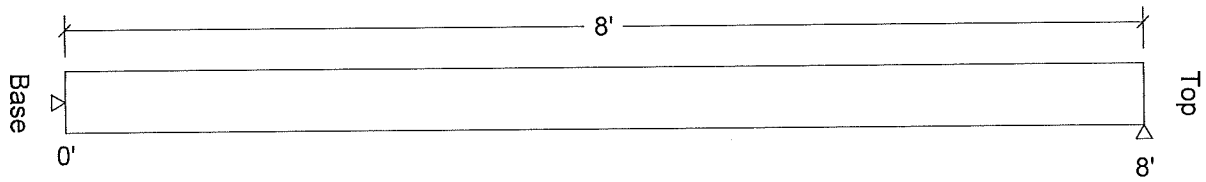

Unfactored:			
Lateral:			
Dead	6		-6
Snow	7		-7
Axial:			
Dead	700		700
Snow	741		741
Factored:			
R->L			-13
Load comb			#2
L->R	13		
Load comb	#2		#1

Porch Post

Timber-soft, D.Fir-L, No.2, 6x6 (5-1/2"x5-1/2")

Support: Non-wood

Total length: 8.0'; Volume = 1.7 cu.ft.; Post or timber

Pinned base; Load face = width(b); Ke x Lb: 1.0 x 8.0 = 8.0 ft; Ke x Ld: 1.0 x 8.0 = 8.0 ft;

This section PASSES the design code check.

Analysis vs. Allowable Stress and Deflection using NDS 2018 :

Criterion	Analysis Value	Design Value	Unit	Analysis/Design
Bending(+)	fb = 46	Fb' = 862	psi	fb/Fb' = 0.05
Axial	fc = 48	Fc' = 661	psi	fc/Fc' = 0.07
Combined	(axial + eccentric moment)			Eq.15.4-3 = 0.06
Axial Bearing	fc = 48	Fc* = 805	psi	fc/Fc* = 0.06
Live Defl'n	0.00 = < L/999	0.80 = L/120	in	0.01
Total Defl'n	0.01 = < L/999	0.80 = L/120	in	0.01

Additional Data:

FACTORS:	F/E(psi)	CD	CM	Ct	CL/CP	CF	Cfu	Cr	Cfrt	Ci	LC#
Fb'+	750	1.15	1.00	1.00	1.000	1.000	-	1.00	1.00	1.00	2
Fc'	700	1.15	1.00	1.00	0.821	1.000	-	-	1.00	1.00	2
E'	1.3 million		1.00	1.00	-	-	-	-	1.00	1.00	2
Emin'	0.47 million		1.00	1.00	-	-	-	-	1.00	1.00	2
Fc*	700	1.15	1.00	1.00	-	1.000	-	-	1.00	1.00	2

CRITICAL LOAD COMBINATIONS:

```
Bending(+): LC #2  = D+S
Deflection: LC #2  = D+S  (live)
            LC #2  = D+S  (total)
Axial     : LC #2  = D+S
Combined  : LC #2  = D+S   Fb'= 862
            FcE= 1268     Pxe/S=fc(6xe/d)= 46
D=dead L=live S=snow W=wind I=impact Lr=roof live Lc=concentrated E=earthquake
All LC's are listed in the Analysis output
Load combinations: ASCE 7-16 / IBC 2018
```

CALCULATIONS:

```
M(+) = 106 lbs-ft; P = 1441 lbs
EI = 99.13e06 lb-in^2
"Live" deflection is due to all non-dead loads (live, wind, snow…)
Total deflection = 1.5 dead + "live"
```

Design Notes:

1. WoodWorks analysis and design are in accordance with the ICC International Building Code (IBC 2018), the National Design Specification (NDS 2018), and NDS Design Supplement.
2. Please verify that the default deflection limits are appropriate for your application.
3. Axial load eccentricity applied in direction of load face only. It is the designers responsibility to check for effect of eccentricity in the other direction.

PSE
PRECISION STRUCTURAL ENGINEERING

PROJECT :
CLIENT :
JOB NO. :
DATE :
PAGE :
DESIGN BY :
REVIEW BY :

Plain Concrete Footing Design Based on ACI 318-14

INPUT DATA

COLUMN WIDTH	c_1	=	6	in
COLUMN DEPTH	c_2	=	6	in
BASE PLATE WIDTH	b_1	=	6	in
BASE PLATE DEPTH	b_2	=	6	in
FOOTING CONCRETE STRENGTH	fc'	=	2.5	ksi
REBAR YIELD STRESS	fy	=	60	ksi
AXIAL DEAD LOAD	P_{DL}	=	0.7	k
AXIAL LIVE LOAD	P_{LL}	=	0.741	k
LATERAL LOAD (0=WIND, 1=SEISMIC)		=	0	Wind,SD
WIND AXIAL LOAD	P_{LAT}	=	0	k, SD
SURCHARGE	qs	=	0	ksf
SOIL WEIGHT	ws	=	0.11	kcf
FOOTING EMBEDMENT DEPTH	Df	=	2.00	ft
FOOTING THICKNESS	T	=	12	in
ALLOWABLE SOIL PRESSURE	Qa	=	1.5	ksf
FOOTING WIDTH	B	=	2	ft
FOOTING LENGTH	L	=	2	ft

DESIGN SUMMARY

FOOTING WIDTH	B	=	2.00	ft
FOOTING LENGTH	L	=	2.00	ft
FOOTING THICKNESS	T	=	12	in

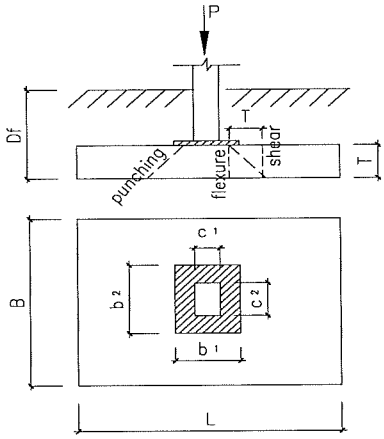

THE FOOTING DESIGN IS ADEQUATE.

ANALYSIS

DESIGN LOADS (IBC 1605.3.2 & ACI 318 5.3)

CASE 1:	DL + LL	P	=	2	k	1.2 DL + 1.6 LL	Pu	=	2	k
CASE 2:	DL + LL +0.6(1.3) W	P	=	2	k	1.2 DL + LL + 1.0 W	Pu	=	2	k
CASE 3:	DL + LL + 0.6(0.65) W	P	=	2	k	0.9 DL+ 1.0 W	Pu	=	1	k

CHECK SOIL BEARING CAPACITY (ACI 318 13.3.1.1)

$$q_{MAX} = \frac{P}{BL}$$

	CASE 1	CASE 2	CASE 3
=	0.40 ksf,	0.40 ksf,	0.40 ksf

q_{MAX} < $k Q_a$, [Satisfactory]

where k = 1 for gravity loads, 4/3 for lateral loads.

DESIGN FOR FLEXURE (ACI 318 14.5)

$$\phi M_n = MIN\left(5\phi\sqrt{f'_c}S,\ 0.85\phi f'_c S\right) = 7.20 \text{ ft-kips}$$

where ϕ = 0.6 (ACI 318 21.2)
S = elastic section modulus of section = 576 in^3

$$M_u = \frac{(0.5L - 0.25b_1 - 0.25c_1)^2 P_{u,max}}{2L} = 0.28 \text{ ft-kips} < \phi M_n \quad \text{[Satisfactory]}$$

CHECK FLEXURE SHEAR (ACI 318 14.5)

$$\phi V_n = \frac{4}{3}\phi\sqrt{f'_c}BT = 11.52 \text{ kips}$$

where ϕ = 0.6 (ACI 318 21.2)

$$V_u = (0.5L - 0.25b_1 - 0.25c_1 - T)\frac{P_{u,max}}{L} = -0.25 \text{ kips} < \phi V_n \quad \text{[Satisfactory]}$$

CHECK PUNCHING SHEAR (ACI 318 14.5)

$$\phi V_n = MIN\left[\left(\frac{4}{3} + \frac{8}{3\beta_c}\right),\ 2.66\right]\phi\sqrt{f'_c}(c_1 + c_2 + b_1 + b_2 + 4T)T = 68.95 \text{ kips}$$

where ϕ = 0.6 (ACI 318 21.2)
β_c = ratio of long side to short side of concentrated load = 1.00

$$V_u = P_{u,max}\left[1 - \frac{1}{BL}\left(\frac{b_1 + c_1}{2} + T\right)\left(\frac{b_2 + c_2}{2} + T\right)\right] = 0.89 \text{ ft-kips} < \phi V_n \quad \text{[Satisfactory]}$$

Precision Structural Engineering, Inc.
250 Main Street, Suite A • Klamath Falls, OR 97601
Tel (541) 850-6300 • FAX (541) 850-6233

Medford Office
836 Mason Way (off Sage Road) • Medford, OR 97501
Tel (541) 858-8500

www.structure1.com • Email: info@structure1.com

PROJECT NO. Rontec 220-57 SHEET 1030 OF

PROJECT NAME DESIGNED BY CSK DATE

SUBJECT Foundation CHECKED BY DATE

Footing @ Vault

Roof: DL = 15 PSF 5 ft x 4 ft = 300 lb
SL = 30 PSF 5 ft x 4 ft = 600 lb

Wall DL = 81 psf x 8 ft x 6 ft = 3888 lb

Floor: DL = 50 psf 4 ft x 4 ft = 800 lb
LL = 40 psf 4 ft x 4 ft = 640 lb

Tank DL = 1000 Gal. x 8.34 lb/gal. x .5 = 4170 lb.

USE [36" x 36" x 12" Footing w/ 4-#4 Rebar E.W.]

PSE
PRECISION STRUCTURAL ENGINEERING

PROJECT :
CLIENT :
JOB NO. :
DATE :
PAGE :
DESIGN BY :
REVIEW BY :

Plain Concrete Footing Design Based on ACI 318-14

INPUT DATA

COLUMN WIDTH	c_1	=	2	in
COLUMN DEPTH	c_2	=	2	in
BASE PLATE WIDTH	b_1	=	3	in
BASE PLATE DEPTH	b_2	=	3	in
FOOTING CONCRETE STRENGTH	fc'	=	2.5	ksi
REBAR YIELD STRESS	fy	=	60	ksi
AXIAL DEAD LOAD	P_{DL}	=	9.158	k
AXIAL LIVE LOAD	P_{LL}	=	1.24	k
LATERAL LOAD (0=WIND, 1=SEISMIC)		=	0	Wind,SD
WIND AXIAL LOAD	P_{LAT}	=	0	k, SD
SURCHARGE	qs	=	0	ksf
SOIL WEIGHT	ws	=	0.11	kcf
FOOTING EMBEDMENT DEPTH	Df	=	2.00	ft
FOOTING THICKNESS	T	=	12	in
ALLOWABLE SOIL PRESSURE	Qa	=	1.5	ksf
FOOTING WIDTH	B	=	3	ft
FOOTING LENGTH	L	=	3	ft

DESIGN SUMMARY

FOOTING WIDTH	B	=	3.00	ft
FOOTING LENGTH	L	=	3.00	ft
FOOTING THICKNESS	T	=	12	in

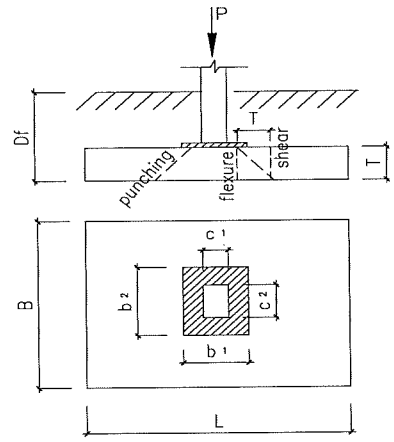

THE FOOTING DESIGN IS ADEQUATE.

ANALYSIS

DESIGN LOADS (IBC 1605.3.2 & ACI 318 5.3)

CASE 1:	DL + LL	P	=	11	k	1.2 DL + 1.6 LL	Pu	=	13	k
CASE 2:	DL + LL +0.6(1.3) W	P	=	11	k	1.2 DL + LL + 1.0 W	Pu	=	12	k
CASE 3:	DL + LL + 0.6(0.65) W	P	=	11	k	0.9 DL+ 1.0 W	Pu	=	8	k

CHECK SOIL BEARING CAPACITY (ACI 318 13.3.1.1)

$$q_{MAX} = \frac{P}{BL}$$

	CASE 1	CASE 2	CASE 3
=	1.20 ksf,	1.20 ksf,	1.20 ksf

q_{MAX} < $k\,Q_a$, [Satisfactory]

where k = 1 for gravity loads, 4/3 for lateral loads.

DESIGN FOR FLEXURE (ACI 318 14.5)

$$\phi M_n = MIN\left(5\phi\sqrt{f'_c}S,\ 0.85\phi f'_c S\right) = 10.80 \text{ ft-kips}$$

where ϕ = 0.6 (ACI 318 21.2)
S = elastic section modulus of section = 864 in^3

$$M_u = \frac{(0.5L - 0.25b_1 - 0.25c_1)^2 P_{u,max}}{2L} = 4.21 \text{ ft-kips} < \phi M_n \quad \text{[Satisfactory]}$$

CHECK FLEXURE SHEAR (ACI 318 14.5)

$$\phi V_n = \frac{4}{3}\phi\sqrt{f'_c}BT = 17.28 \text{ kips}$$

where ϕ = 0.6 (ACI 318 21.2)

$$V_u = (0.5L - 0.25b_1 - 0.25c_1 - T)\frac{P_{u,max}}{L} = 1.71 \text{ kips} < \phi V_n \quad \text{[Satisfactory]}$$

CHECK PUNCHING SHEAR (ACI 318 14.5)

$$\phi V_n = MIN\left[\left(\frac{4}{3} + \frac{8}{3\beta_c}\right),\ 2.66\right]\phi\sqrt{f'_c}(c_1 + c_2 + b_1 + b_2 + 4T)T = 55.54 \text{ kips}$$

where ϕ = 0.6 (ACI 318 21.2)
β_c = ratio of long side to short side of concentrated load = 1.00

$$V_u = P_{u,max}\left[1 - \frac{1}{BL}\left(\frac{b_1 + c_1}{2} + T\right)\left(\frac{b_2 + c_2}{2} + T\right)\right] = 10.87 \text{ ft-kips} < \phi V_n \quad \text{[Satisfactory]}$$

Precision Structural Engineering, Inc.
250 Main Street, Suite A • Klamath Falls, OR 97601
Tel (541) 850-6300 • FAX (541) 850-6233

Medford Office
836 Mason Way (off Sage Road) • Medford, OR 97501
Tel (541) 858-8500

www.structure1.com • Email: info@structure1.com

PROJECT NO. Romtec 220-57 SHEET 1032 OF

PROJECT NAME DESIGNED BY CSK DATE

SUBJECT Lateral CHECKED BY DATE

Masonry Shearwall 8'

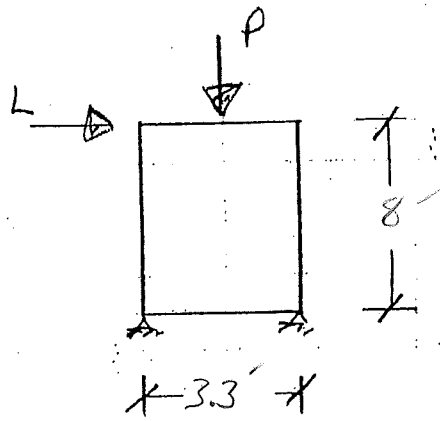

P: DL = 15 psf × 2 ft. = 30 plf
= 30 psf × 2 ft. = 60 plf

L:

WL = [(10.84 × sin22.6°) × 11 ft. × 17 ft.] +
pg. 21.02 psf × 4 ft. × 4 ft.

WL = 823 lb.

EL = 3166 lb. / 2 = 1583 lb. × 1.5 = 2374.5 lb
pg.

USE [6" CMU w/ #4 @ 32" o.c. horz. avail.]

PSE
PRECISION STRUCTURAL ENGINEERING

PROJECT :
CLIENT :
JOB NO. : DATE :

PAGE :
DESIGN BY :
REVIEW BY :

Masonry Shear Wall Design Based on TMS 402-16/13 & 2015 IBC (both ASD and SD)

INPUT DATA & DESIGN SUMMARY

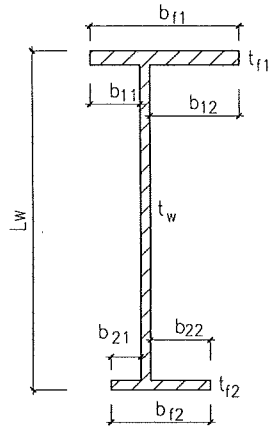

SPECIAL INSPECTION (0=NO, 1=YES) 1 Yes
(This option only for local jurisdiction amendments to the code, not part of TMS.)
TYPE OF MASONRY (1=CMU, 2=BRICK) 1 CMU
MASONRY STRENGTH f_m' = 1.5 ksi
REBAR YIELD STRESS f_y = 60 ksi
ALLOWABLE 30% INCREASING ? (*Yes* or *No*, IBC 1605.3.2) Yes
SEISMIC PERFORMANCE CATEGORY C Seismic C
(C,D,E, 0=WIND, 5=GRAVITY)
MASONRY LAID IN RUNNING BOND ? (TMS 402 7.3.2.6) Yes
SERVICE AXIAL LOAD P = 0.297 kips, at middle of L_w
SERVICE SHEAR LOAD V_x = 2.375 kips, (in-plane force)
SERVICE MOMENT LOAD M_x = 12.6667 ft-kips, (top flange, bf1, compression)
M_y = 0.2 ft-kips, (out-of-plane, left b11 & b21, compression)

EFFECTIVE HEIGHT OF WALL h_w = 8 ft
LENGTH OF SHEAR WALL L_w = 3.3 ft, (within vertical control joints)

THE WALL DESIGN IS ADEQUATE.

THICKNESS OF WALL t_w = 6 in
REINFORCING OF WALL 1 # 4 at each ends, with 4 in center to edge.
A_{sh}, Horizontal 1 # 4 @ 32 in o.c.
A_{sv}, Vertical 1 # 4 @ 32 in o.c.

TOP FLANGE (COMPRESSION) b_{11} = 0 in , b_{12} = 0 in , b_{f1} = 6 in ,(TMS 402 5.1.1.2.3)
t_{f1} = 8 in , 1 # 4 @ 32 in o.c., Vertical

BOTTOM FLANGE b_{21} = 0 in , b_{22} = 0 in , b_{f2} = 6 in ,(TMS 402 5.1.1.2.3)
t_{f2} = 8 in , 1 # 4 @ 32 in o.c., Vertical

ANALYSIS
CHECK FLEXURAL & AXIAL CAPACITY BY ALLOWABLE STRESS DESIGN (ASD)

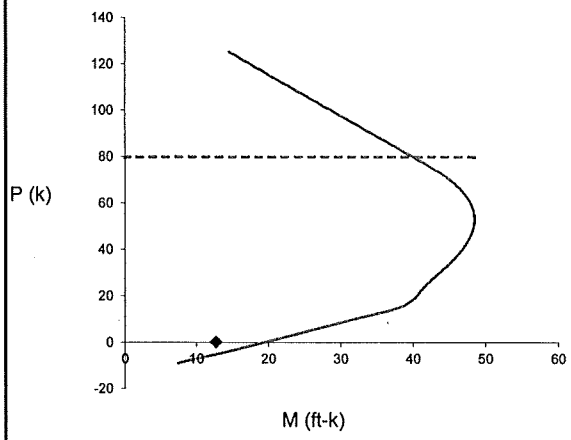

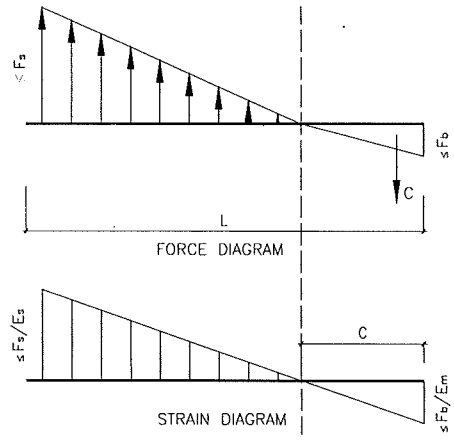

P (load) = 0.297 kips < P (allowable) = P_a = 79.8411 kips
M (resultant) = $(M_x^2 + M_y^2)^{0.5}$ = 12.6682 ft-kips < M (allowable) = 19.7074 ft-kips [Satisfactory]
Where E_m = 1350 ksi, (TMS 402 4.2.2.2.1) A_n = 229 in^2
E_s = 29000 ksi, (TMS 402 4.2.2.1) A_{st} = 0.55 in^2
Scale Factor = 1.333 , (TMS 402-11 2.1.2) $f_s \geq$ 0 ksi, (TMS 402 8.3.3.3)
F_b = 0.660 ksi, (TMS 402 8-18) h / r = 59 , neglected conservatively flanges.
F_s = 32.00 ksi, (TMS 402 8.3.3.1) P_a = 79.8411 kips, (TMS 402 8.3.4.2.1)

(cont'd)

CHECK FLEXURAL & AXIAL CAPACITY BY STRENGTH DESIGN (SD)

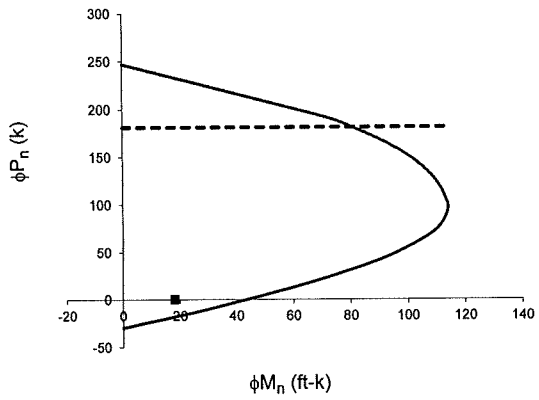

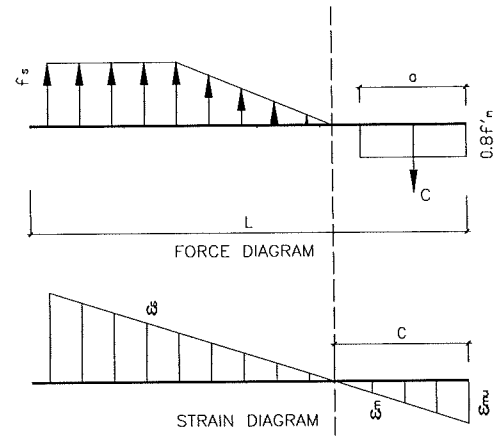

$P_u = 1.2\ P =$	0.3564	kips	<	$\phi P_n =$	181.44	kips, (TMS 402 9.3.4.1.1)	
$M_u = (1/0.7)\ (M_x^2 + M_y^2)^{0.5} =$	18.0975	ft-kips	<	$\phi M_n =$	43.7962	ft-kips, at P_u level.	
			[Satisfactory]				

Where	$\varepsilon_{mu} =$	0.0025	, (TMS 402 9.3.2.c)	d =	39 in
	$\phi =$	0.9	, (TMS 402 9.1.4.1)	$f_m' =$	1.5 ksi

CHECK SHEAR CAPACITY (ASD), (TMS 402 8.3.6)

$$F_v = MAX\left\{(SF)\left[\frac{1}{4}\left(4-1.75MIN\left(1\ ,\ \frac{M_T}{Vd}\right)\right)\sqrt{f'_m}+0.25\frac{P}{A_n}\right]+0.5\frac{A_v F_s d}{A_n s}\ ,\ (SF)\left[\frac{1}{2}\left(4-1.75MIN\left(1\ ,\ \frac{M_T}{Vd}\right)\right)\sqrt{f'_m}+0.25\frac{P}{A_n}\right]\right\}$$

= 59 psi > 1.5 f_v = 16 psi [Satisfactory]

(factor 1.5 from TMS 402 7.3.2.6.1.2)

$$F_{v,\ Maximum} = (SF)\,MIN\left[3\ ,\ MAX\left(2\ ,\ 2+\frac{4}{3}\left(1-\frac{M_T}{Vd}\right)\right)\right]\sqrt{f'_m} =$$ 103 psi > 1.5 f_v

[Satisfactory]

CHECK MINIMUM REINFORCEMENTS

$A_{sh,min} =$	0.047	in^2/ft	<	$A_{sh,actual} =$	0.075	in^2/ft	[Satisfactory]
$S_{sh,max} =$	48	in	>	$S_{sh,actual} =$	32	in	[Satisfactory]
$A_{sv,min} =$	0.047	in^2/ft	<	$A_{sv,actual} =$	0.075	in^2/ft	[Satisfactory]
$S_{sv,max} =$	48	in	>	$S_{sv,actual} =$	32	in	[Satisfactory]
$A_{total,min} =$	0.135	in^2/ft	<	$A_{total,actual} =$	0.150	in^2/ft	[Satisfactory]

CHECK MAXIMUM REINFORCEMENT PERCENTAGE

$$\rho_{max} = \frac{n f'_m}{2 f_y\left(n+\frac{f_y}{f'_m}\right)} =$$ 0.0044 > $\rho =$ 0.0009 [Satisfactory]

(TMS 402 8.3.4.4)

Precision Structural Engineering, Inc.
250 Main Street, Suite A • Klamath Falls, OR 97601
Tel (541) 850-6300 • FAX (541) 850-6233

Medford Office
836 Mason Way (off Sage Road) • Medford, OR 97501
Tel (541) 858-8500

www.structure1.com • Email: info@structure1.com

PROJECT NO. Romtec 20-57 SHEET ____ OF ____

PROJECT NAME ____ DESIGNED BY LSK DATE ____

SUBJECT Lateral CHECKED BY ____ DATE ____

Horz. Wall Beam @ Top of Wall

F = 196 PLF

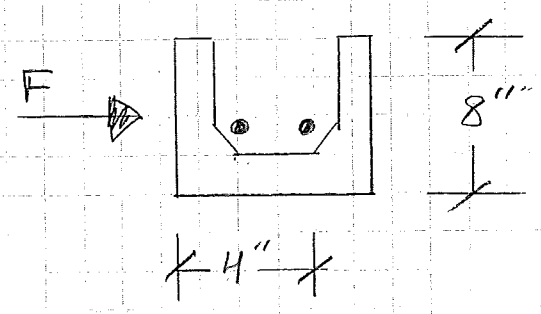

$$V = \frac{196\ plf \cdot 8.7\ ft.}{2} = 853\ lb$$

$$M = \frac{196\ plf \cdot 8.7^2\ ft.}{8} = 1854\ lb\text{-}ft$$

USE [6"x8" CMU w/ 1 #4 Tension Bar]

PSE
PRECISION STRUCTURAL ENGINEERING

PROJECT :
CLIENT :
JOB NO. :
DATE :
PAGE :
DESIGN BY :
REVIEW BY :

Masonry Beam Design Based on TMS 402-16/13

INPUT DATA & DESIGN SUMMARY

SPECIAL INSPECTION (0=NO, 1=YES)			1	Yes
TYPE OF MASONRY (1=CMU, 2=BRICK)			1	CMU
MASONRY STRENGTH	f_m'	=	1.5	ksi
REBAR YIELD STRESS	f_y	=	60	ksi
ALLOWABLE INCREASING ? (IBC/CBC 1605.3.2)			Yes	
SERVICE SHEAR LOAD	V	=	0.853	k
SERVICE MOMENT LOAD	M	=	1.854	ft-k
WIDTH	b	=	6	in
EFFECTIVE DEPTH	d	=	6	in
CLEAR SPAN	Lc	=	8.7	ft
LOAD TYPE (1=SEISMIC, 0=WIND, 5=GRAVITY)			1	Seismic
VERTICAL REINF. 0	#	4	@	32 in o.c.
TENSION REINFORCEMENT		1	#	4

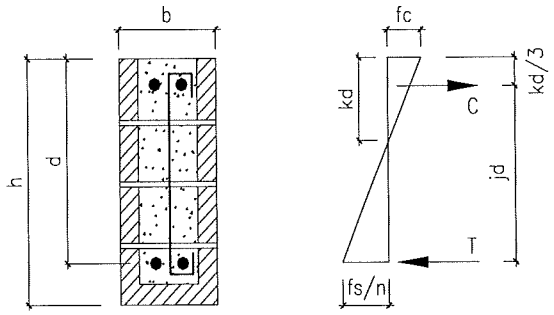

[THE BEAM DESIGN IS ADEQUATE.]

ANALYSIS

ALLOWABLE STRESS FACTOR	SF	=	1.333	
ALLOWABLE REINF. STRESS	(1.33 or 1.0) F_s	=	32	ksi
ALLOWABLE MASONRY STRESS	F_b=(SF)(0.33f_m')	=	0.66	ksi
MASONRY ELASTICITY MODULUS	E_m	=	1350	ksi, (TMS 402 4.2.2)
STEEL ELASTICITY MODULUS	E_s	=	29000	ksi, (TMS 402 4.2.2)
EFFECTIVE WIDTH	b_w	=	5.63	in [Satisfactory, Lc < 32 bw]
MODULAR RATIO	n	=	21.48	
TENSION REINFORCEMENT RATIO	ρ	=	0.006	

THE NEUTRAL AXIS DEPTH FACTOR IS

$$k = \sqrt{2\rho n + (\rho n)^2} - \rho n \quad = \quad 0.393$$

THE LEVER-ARM FACTOR IS

$$j = 1 - \frac{k}{3} \quad = \quad 0.869$$

THE TENSILE STRESS IN REINFORCEMENT DUE TO FLEXURE IS

$$f_s = \frac{M}{A_s jd} \quad = \quad 21.3 \text{ ksi} \quad < \quad F_s \quad \text{[SATISFACTORY]}$$

THE COMPRESSIVE STRESS IN THE EXTREME FIBER DUE TO FLEXURE IS

$$f_b = \frac{2M}{jkb_w d^2} \quad = \quad 0.64 \text{ ksi} \quad < \quad F_b \quad \text{[SATISFACTORY]}$$

THE SHEAR STRESS IN MASONRY IS

$$f_v = \frac{V}{b_w d} \quad = \quad 25.3 \text{ psi} \quad < \quad F_v = MIN\left[(SF)1.125\sqrt{f_m'} + 0.5\left(\frac{A_v F_s d}{A_n S}\right) \;,\; (SF)2\sqrt{f_m'}\right]$$

(TMS 402 8.3.5)

$$= \quad 58.0948 \text{ psi} \quad \text{[SATISFACTORY]}$$

3. PRODUCT DATA

This section is structured as follows:

3.01 Finishes

3.02 Structure

3.03 Fixtures

3.04 Electrical

3.05 Accessories

This section corresponds with the building drawings & details, describing each component supplied by Romtec in the building kit. The data sheets are submitted for approval by the reviewing authority and are for use in installation of the building.

Note: Romtec's proposal and quote were based on the configuration of components that is reflected in the following data sheets. Any request for changes to the proposed components may result in a price increase. This includes requests for options that are shown on the manufacturer data sheets, as well as any color or finish requests.

Note: The product data sheets for the products and materials Romtec provides in the building kit are published by the various product/material manufacturers. Romtec has made every effort to ensure the accuracy of the information contained in the product data sheets, however there may be discrepancies since manufacturers can change their product specifications without notice to Romtec.

Special Note: Product data sheets for any items that are to be provided by installer or owner will NOT be provided in this document.

3.01 FINISHES

The following data sheets define the finishes for the Romtec supplied components. This section is specifically approved on the submittal approval and notice to proceed with production form. By signing the approval form, you are approving the finish selections shown in this section. It is not Romtec's responsibility to re-confirm the color selections with the project Owner.

Data sheets to follow.

MORTAR JOINT
Smooth Face
Color: Gray

NCMA TEK

National Concrete Masonry Association
an information series from the national authority on concrete masonry technology

TYPICAL SIZES AND SHAPES OF CONCRETE MASONRY UNITS

TEK 2-1A
Unit Properties (2002)

Keywords: architectural units, bond beams, concrete brick, dimensions, equivalent thickness, lintels, screen block, sizes and shapes

INTRODUCTION

Concrete masonry is one of the most versatile building products available because of the wide variety of appearances that can be achieved using concrete masonry units. Concrete masonry units are manufactured in different sizes, shapes, colors, and textures to achieve a number of finishes and functions. In addition, because of its modular nature, different concrete masonry units can be combined within the same wall to achieve variations in texture, pattern, and color.

Certain concrete masonry sizes and shapes are considered standard, while others are popular only in certain regions. Local manufacturers can provide detailed information on specific products, or the feasibility of producing custom units. A more complete guide to concrete masonry units is the *Shapes and Sizes Directory* (ref. 2).

UNIT SIZES

Typically, concrete masonry units have nominal face dimensions of 8 in. (203 mm) by 16 in. (406 mm), available in nominal thicknesses of 4 , 6, 8, 10, and 12 in. (102, 152, 203, 254, and 305 mm). Nominal dimensions refer to the module size for planning bond patterns and modular layout with respect to door and window openings. Actual dimensions of concrete masonry units are typically 3/8 in. (9.5 mm) less than nominal dimensions, so that the 4 or 8 in. (102 or 203 mm) module is maintained with 3/8 in. (9.5 mm) mortar joints. Figure 1 illustrates nominal and actual dimensions for a nominal 8 x 8 x 16 in. (203 x 203 x 406 mm) concrete masonry unit. In addition to these standard sizes, other unit heights, lengths, and thicknesses may be available from local concrete masonry producers.

Standard Specification for Load-Bearing Concrete Masonry Units, ASTM C 90 (ref. 5) is the most frequently referenced standard for concrete masonry units. ASTM C 90 includes minimum face shell and web thicknesses for

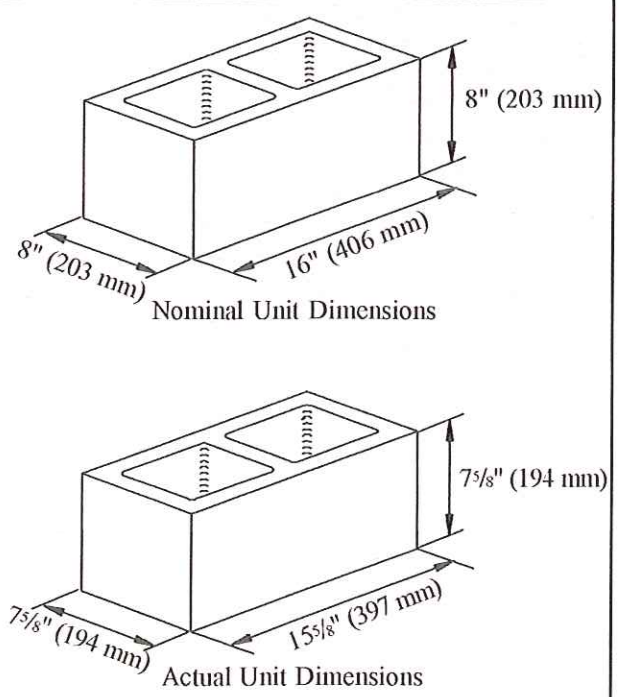

Figure 1—Nominal and Actual Unit Dimensions

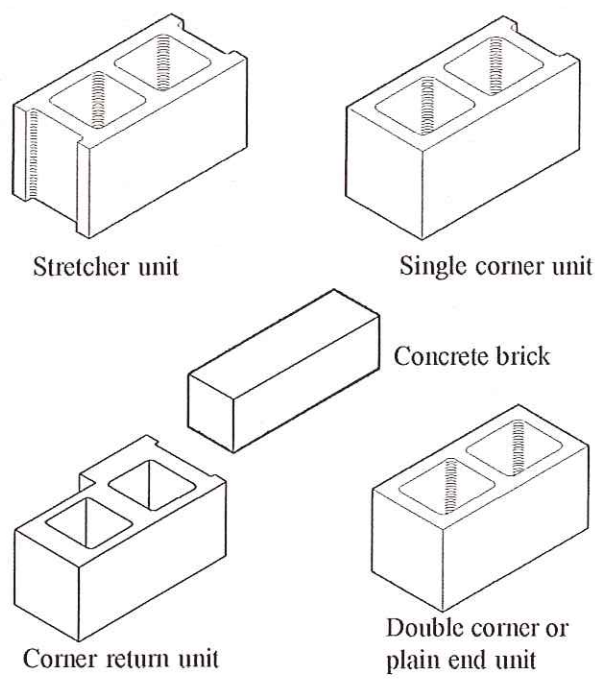

Figure 2—Typical Concrete Masonry Units

TEK 2-1A © 2002 National Concrete Masonry Association

the different sizes of concrete masonry units as listed in Table 1. Overall unit dimensions (height, width, or length) are permitted to vary by ±1/8 in. (3.2 mm) from the dimensions specified by the manufacturer. Where required, units may be manufactured to closer tolerances than those permitted in ASTM C 90. ASTM C 90 also defines the difference between hollow and solid concrete masonry units. The net cross-sectional area of a solid unit is at least 75% of the gross cross-sectional area.

In addition to the "standard" sizes listed above, concrete brick is available in typical lengths of 8 and 16 in. (203 and 406 mm), nominal 4 in. (102 mm) width, and a wide range of heights. They may be 100% solid, or may have two or three cores. Like ASTM C 90, *Standard Specification for Concrete Building Brick*, ASTM C 55 (ref. 4), permits overall unit dimensions to vary ±1/8 in. (3.2 mm) from the dimensions specified by the manufacturer. Nominal dimensions of modular concrete brick equal the actual dimensions plus 3/8 in. (9.5 mm), the thickness of one standard mortar joint. However, nominal dimensions of nonmodular sized concrete brick usually exceed the standard dimensions by 1/8 to 1/4 in. (3.2 to 6.4 mm).

Table 1—Minimum Thickness of Face Shells and Webs (ref. 5)

Nominal width of unit, in. (mm)	Face shell thickness[a], in. (mm)	Web thickness: Webs[a], in. (mm)	Web thickness: Equivalent web thickness, in./linear foot[b,c] (mm/m)
3 (76) and 4 (102)	3/4 (19)	3/4 (19)	1 5/8 (136)
6 (152)	1 (25)[d]	1 (25)	2 1/4 (188)
8 (203)	1 1/4 (32)[d]	1 (25)	2 1/4 (188)
10 (254)	1 3/8 (35)[d] 1 1/4 (32)[d,e]	1 1/8 (29)	2 1/2 (209)
12 (305)	1 1/2 (38) 1 1/4 (32)[d,e]	1 1/8 (29)	2 1/2 (209)

[a] Average of measurements on 3 units taken at the thinnest point when measured as described in ASTM C 140 (ref. 3). When this standard is used for split face units, a maximum of 10% of a split face shell area is permitted to have thicknesses less than those shown, but not less than 3/4 in. (19.1 mm). When the units are solid grouted, the 10% limit does not apply.

[b] Average of measurements on 3 units taken at the thinnest point when measured as described in ASTM C 140. The minimum web thickness for units with webs closer than 1 in. (25.4 mm) apart shall be 3/4 in. (19.1 mm).

[c] Sum of the measured thickness of all webs in the unit, multiplied by 12 and divided by the length of the unit. Equivalent web thickness does not apply to the portion of the unit to be filled with grout. The length of that portion shall be deducted from the overall length of the unit for the calculation.

[d] For solid grouted masonry construction, minimum face shell thickness not less than 5/8 in. (16 mm).

[e] This face shell thickness is applicable where allowable design load is reduced in proportion to the reduction in thickness from basic face shell thicknesses shown, except that allowable design loads on solid grouted units shall not be reduced.

UNIT SHAPES

Concrete masonry unit shapes have been developed for a wide variety of applications. The most common shapes are shown in Figure 2. Typically, the face shells and webs are tapered on concrete masonry units. Depending on the core molds used in the manufacture of the units, face shells and webs may be tapered with a flare at one end, or may have a straight taper from top to bottom. The taper provides a wider surface for mortar and easier handling for the mason.

The shapes illustrated in Figure 3 have been developed specifically to accommodate reinforcement. **Open-ended units** allow the units to be threaded around reinforcing bars. This eliminates the need to lift units over the top of the reinforcing bar, or to thread the reinforcement through the masonry cores

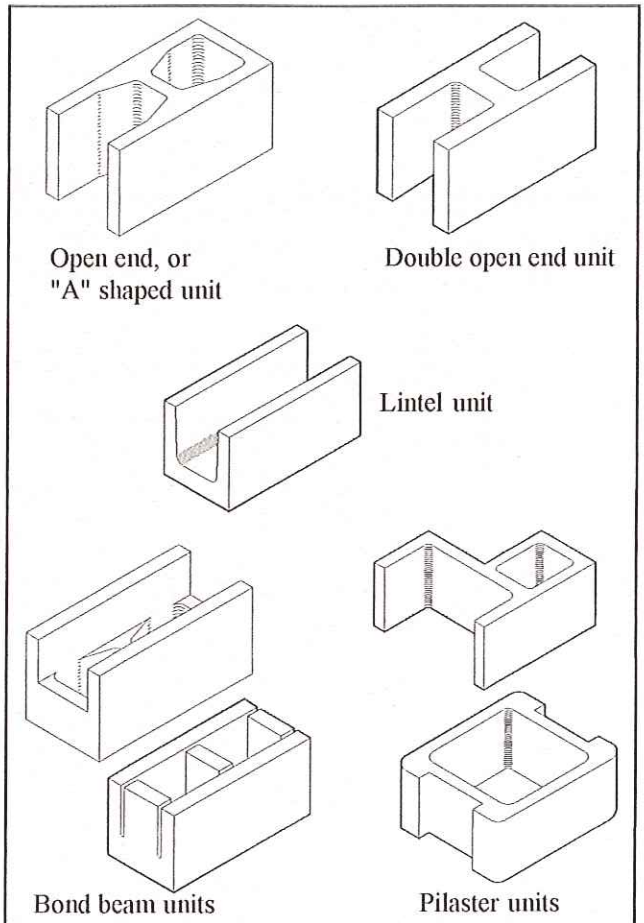

Figure 3—Shapes to Accommodate Reinforcement

after the wall is constructed. Bond beams in concrete masonry walls can be accommodated either by saw-cutting out of a standard unit, or by using **bond beam units.** Bond beam units are either manufactured with reduced webs or with "knock-out" webs, which are removed prior to placement in the wall. Horizontal bond beam reinforcement is easily accommodated in these units. **Lintel units** are similar to the U shaped bond beam units. Lintel units are available in various depths to carry appropriate lintel loads over door and window openings. The solid bottom confines grout to the lintel. **Pilaster and column units** are used to easily accommodate a wall-column or wall-pilaster interface, allowing space for vertical reinforcement in

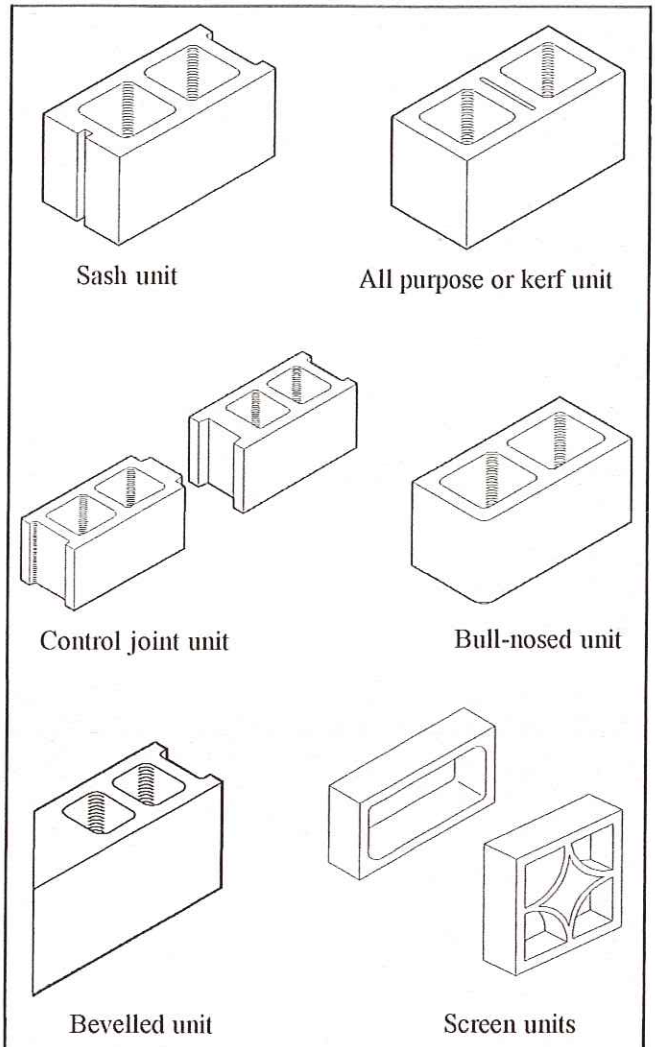

Figure 4—Special Shapes

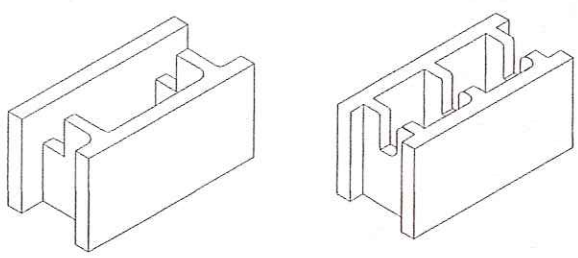

Figure 5—Examples of Concrete Masonry Units Designed For Energy Efficiency

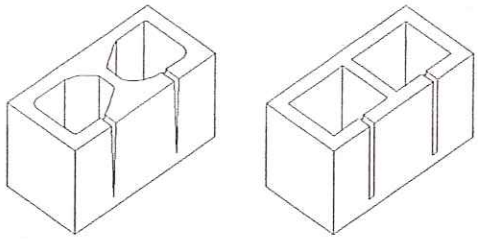

Figure 6—Examples of Acoustical Concrete Masonry Units

the hollow center.

Figure 4 shows units developed for specific wall applications. **Sash block** have a vertical groove molded into one end to accommodate a window sash. Sash block can be laid with the grooves adjacent to one another to accommodate a preformed control joint gasket. **Control joint units** are manufactured with one male and one female end to provide lateral load transfer across control joints. An **all-purpose or kerf unit** contains two closely spaced webs in the center, rather than the typical single web. This allows the unit to be easily split on the jobsite, producing two 8 in. (203 mm) long units, which are typically used adjacent to openings or at the ends or corner of a wall. **Bull-nosed units** are available with either a single or double bull nose, to soften corners. **Screen units** are available in many sizes and patterns. Typical applications include exterior fences, interior partitions, and openings within interior concrete masonry walls. **Bevelled-end units**, forming a 45° angle with the face of the unit, are used to form walls intersecting at 135° angles. Units in adjacent courses overlap to form a running bond pattern at the corner.

A variety of concrete masonry units are designed to increase energy efficiency. These units, examples of which are shown in Figure 5, may have reduced web areas to reduce heat loss through the webs. Web areas can be reduced by reducing the web height or thickness, reducing the number of webs, or both. In addition, the interior face shell of the unit can be made thicker than a typical face shell for increased thermal storage, and hence further increase energy efficiency. Insulating inserts can also be incorporated into standard concrete masonry units to increase energy efficiency.

Acoustical units (Figure 6) dampen sound, thus improving the noise reduction attributes of an interior space. Acoustical units are often used in schools, industrial plants, and churches, and to improve internal acoustics.

SURFACE FINISHES

The finished appearance of a concrete masonry wall can be varied with the size of units, shape of units, color of units and mortar, bond pattern, and surface finish of the units. The various shapes and sizes of concrete masonry units described above are often available in a choice of surface finishes. Some of the surfaces are molded into the units during the manufacturing process, while others are applied separately.

Figure 7 shows some of the more common surface textures available. Ribs, flutes, striations, offsets, and scores are accomplished by using a unit mold with the desired characteristics. Split-faced units are molded with two units face-to-face and then the units are mechanically split apart.

Glazed units are manufactured by bonding a permanent colored facing to a concrete masonry unit, providing a smooth impervious surface. Glazed units are often used for brightly-colored accent bands, and in gymnasiums, rest rooms, and indoor swimming pools where the stain and moisture resistant finish reduces maintenance. Glazed units comply to *Standard Specification for Prefaced Concrete and Calcium Silicate Masonry Units,* ASTM C 744 (ref. 6).

Ground-face units are ground to achieve a smooth finish which reveals the natural colors of the aggregates. Often, specific aggregates will be used to enhance the appearance.

For more information on surface finishes, see TEK 2-3A *Architectural Concrete Masonry Units* (ref. 1).

Figure 7—Examples of Surface Finishes Available For Concrete Masonry Units (clockwise from bottom left: split face with three scores; single score ground face; glazed corner unit; ground face; ground face; single score glazed ; split face; ground face; split face; center: eight-ribbed split face)

REFERENCES

1. *Architectural Concrete Masonry Units*, TEK 2-3A, National Concrete Masonry Association, 2001.
2. *Shapes and Sizes Directory*, National Concrete Masonry Association, 1995.
3. *Standard Methods of Sampling and Testing Concrete Masonry Units and Related Units*, ASTM C 140-01a$^{\varepsilon 1}$. American Society for Testing and Materials, 2001.
4. *Standard Specification for Concrete Building Brick*, ASTM C 55-01a. American Society for Testing and Materials, 2001.
5. *Standard Specification for Load-Bearing Concrete Masonry Units*, ASTM C 90-01a. American Society for Testing and Materials, 2001.
6. *Standard Specification for Prefaced Concrete and Calcium Silicate Masonry Units*, ASTM C 744-99. American Society for Testing and Materials, 1999.

Provided by:

Disclaimer: Although care has been taken to ensure the enclosed information is as accurate and complete as possible, NCMA does not assume responsibility for errors or omissions resulting from the use of this TEK.

NATIONAL CONCRETE MASONRY ASSOCIATION
13750 Sunrise Valley Drive, Herndon, Virginia 20171
www.ncma.org

To order a complete TEK Manual or TEK Index, contact NCMA Publications (703) 713-1900

ROMTEC

KICK PROOF WALL VENTS

The following is an example of the Romtec Kick Proof Wall Vent included in the design of this building.

Specifications

- Romtec XV-000-1003
- Pre-assembled steel frame
- 1” square lock joint wire weave mesh, 10-gauge
- Interior louver with integral insect screen
- Dimensions: 16” x 24” (Outside face)
- Powder coated, standard color is black

Exterior View

Interior View

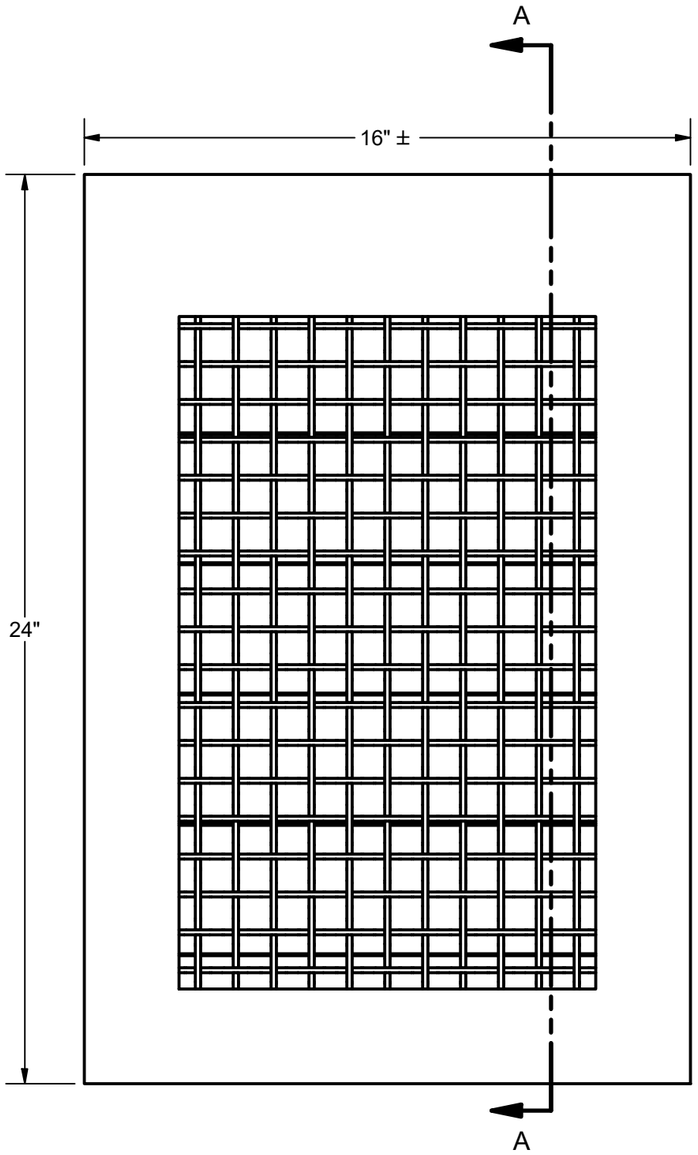

OUTSIDE FRONT VIEW
SCALE 1 / 4

INSTALL BUG SCREEN OVER LOUVER SECTION

SLIDE LOUVER SECTION INTO PLACE

USE THE POP RIVET HOLES IN THE KICK VENT FRAME AS A GUIDE FOR DRILLING HOLES INTO THE LOUVER SECTION

POP RIVET INTO PLACE

NOTE: POWDER COAT KICK VENT FRAME & LOUVER SECTION BEFORE FINAL ASSEMBLY

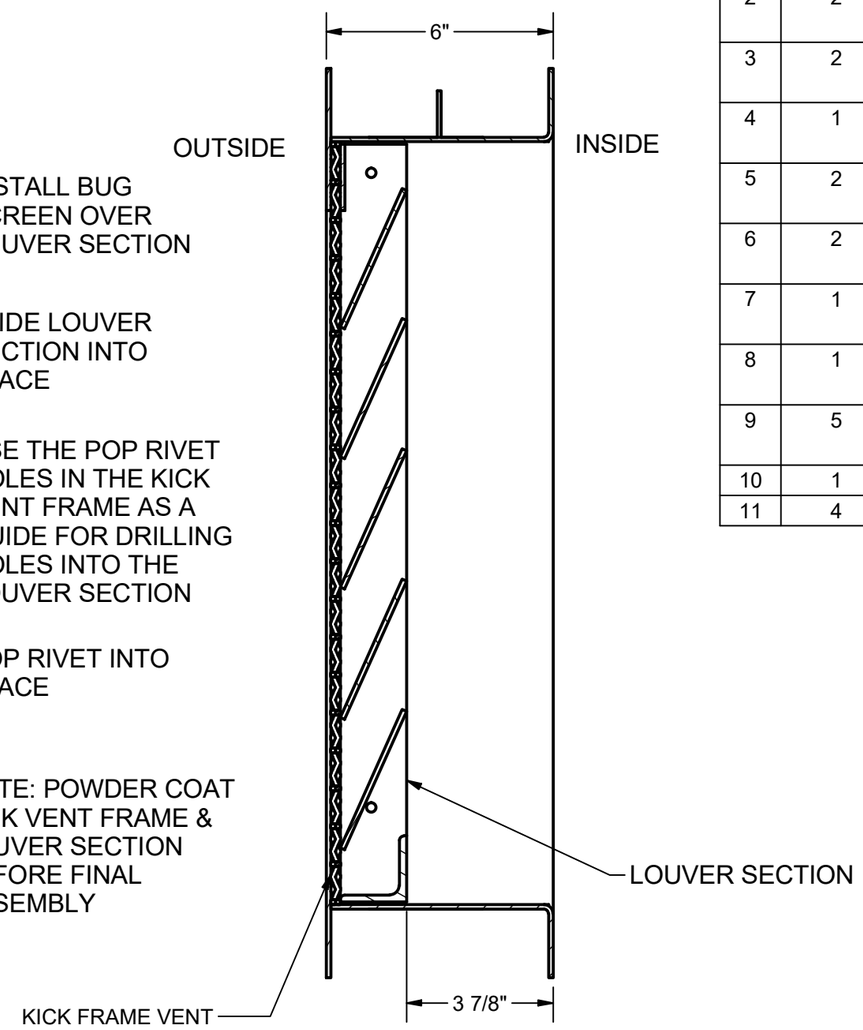

SECTION A-A
SCALE 1 / 4

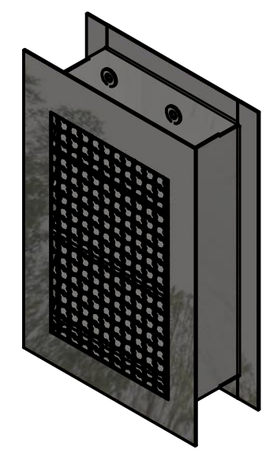

ISOMETRIC VIEW
SCALE 1/10

PARTS LIST

ITEM	ITEM QTY	PART NUMBER	DESCRIPTION
1	1	XV-1624-5001-PL-0.1196-BN-11ga MS PL 16 x 24	11 ga MS PL 16" x 24"
2	2	XV-0024-5002-SM-0.1196-FM-11ga MS 24 x7.28125	FORMED 11 GA, MILD STEEL SHEET METAL 24" LONG
3	2	XV-0016-5001-SM-0.1196-FM-11ga MS 12.3642 x7.28125	FORMED 11 GA, MILD STEEL SHEET METAL 12 3/8" LONG
4	1	XV-1220-5001-CT-0.1-WD-0.135 wire mesh 1x1 space	1" X 1" SPACE .135 DBL INT CRIMP-MILD STEEL
5	2	ANSI B18.22.1 - 1/2 - Regular - Type B	WASHER
6	2	XV-0020-5002-PL-0.125-FM-.125 MS PL 1.75 x 20	1/8" MS 1-3/4" x 20"
7	1	XV-0012-5001-LL-0.1875-FM-.1875 MS ANGLE 1.75 x 11.668	1/8" MS ANGLE 1-3/4' x 11-11/16"
8	1	XV-0011-5004-PL-0.125-FM-.125 MS PL 1.75 x 11.668	1/8" MS 1-3/4 x 11-11/16"
9	5	XV-0012-5001-PL-0.125-FM-.125 MS PL 4 x 11.668	1/8" MS 4" x 11-11/16" LOUVER
10	1	BUG SCREEN	BUG SCREEN
11	4	POP RIVETS	POP RIVETS

ROMTEC
18240 NORTH BANK ROAD
ROSEBURG, OR 97470
(541)-496-3541
FAX (541)-496-0803

MANUFACTURING

© 2018 ROMTEC, INC. ALL RIGHTS RESERVED. THESE PLANS AND DRAWINGS MAY NOT BE REPRODUCED, ADAPTED OR FURTHER DISTRIBUTED, AND NO BUIILDINGS MAY BE CONSTRUCTED FROM THESE PLANS, WITHOUT WRITTEN PERMISSION OF ROMTEC, INC.

DATE: 10/8/2018
DRAWN BY: CR

()=REFERENCE DIMENSION
TOLERANCES (UNLESS OTHERWISE SPECIFIED)

FRACTIONS	±1/16
.XX	±.010
.XXX	±.005
ANGLES	±1/2°

VENT

Formed KICK RESISTANT WALL VENT 16 x 24

REV	DESCRIPTION	DATE	BY
1	SEE MASTER PRODDEUCTION REV LIST	10/29/18	CR
2	SEE MASTER PRODDEUCTION REV LIST	4/8/20	AM

BOM PART:

SHEET 1 OF 7

DWG. NO. XV-000-1005

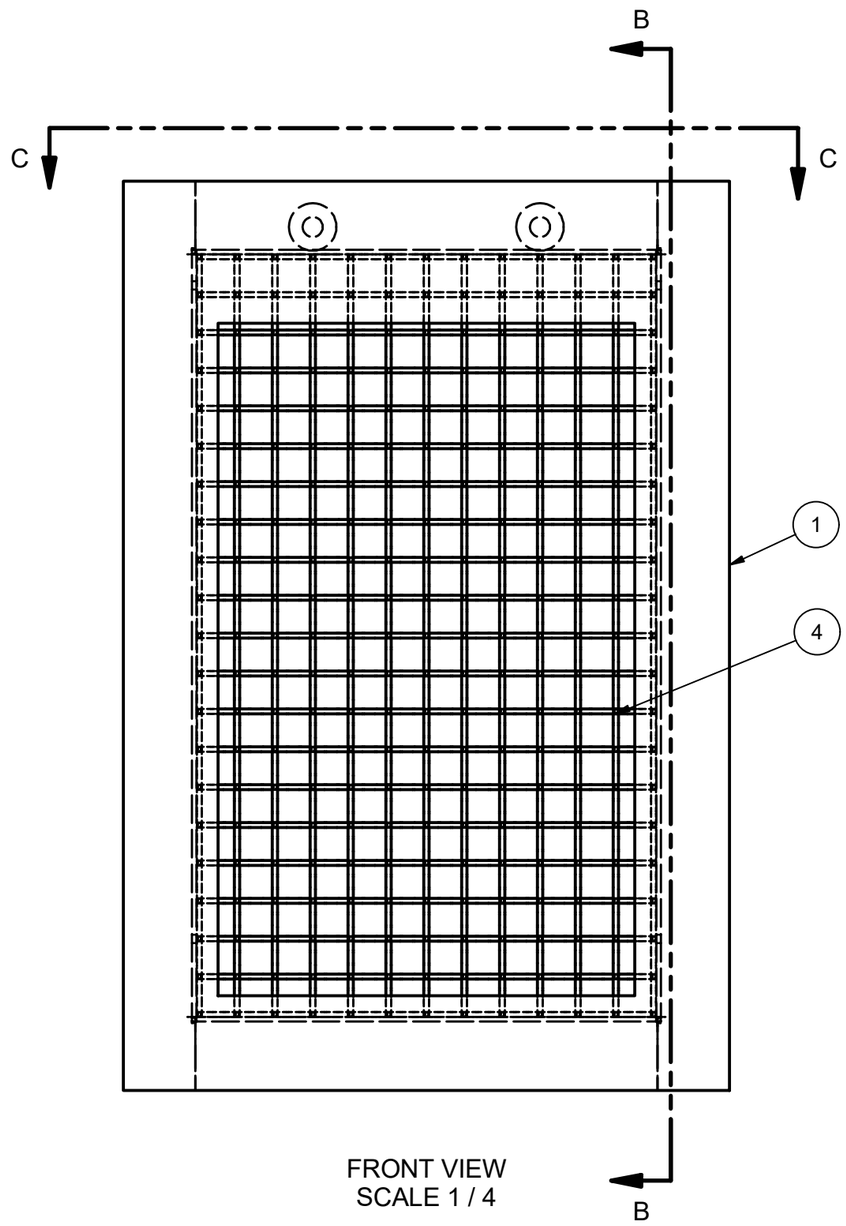

FRONT VIEW
SCALE 1 / 4

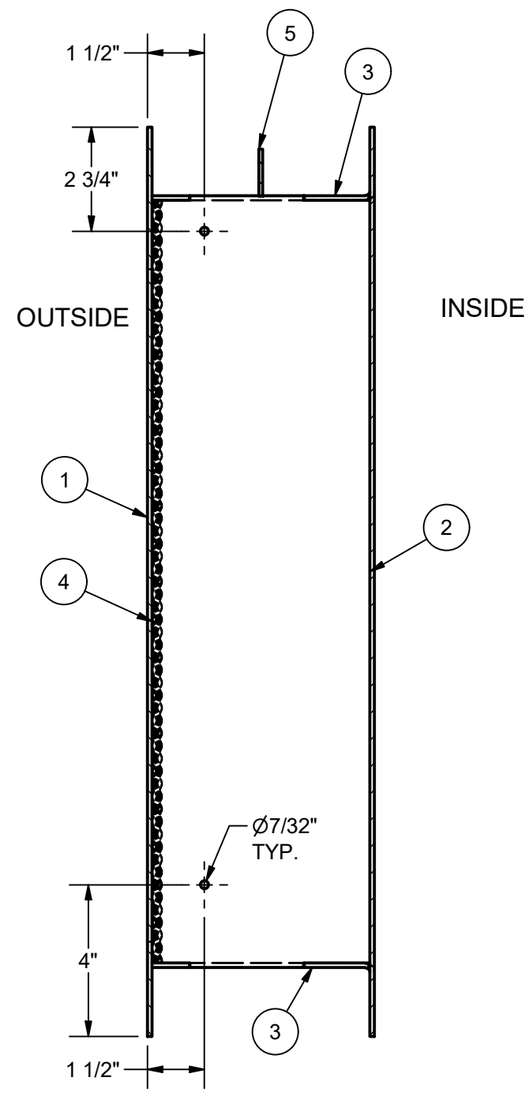

SECTION B-B
SCALE 1 / 4

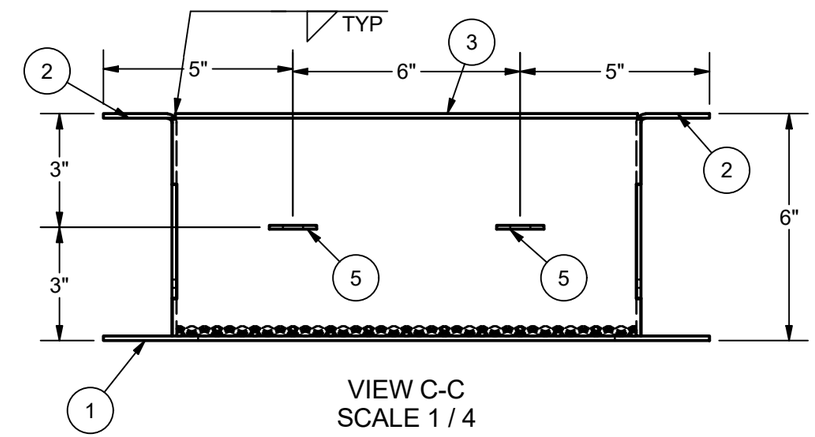

VIEW C-C
SCALE 1 / 4

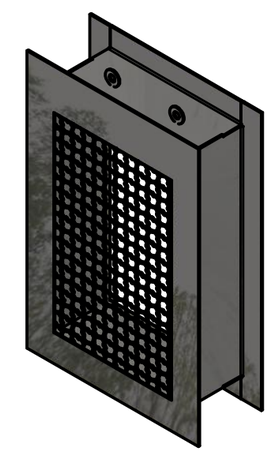

ISOMETRIC VIEW
SCALE 1/10

ROMTEC
18240 NORTH BANK ROAD
ROSEBURG, OR 97470
(541)-496-3541
FAX (541)-496-0803

MANUFACTURING

© 2018 ROMTEC, INC. ALL RIGHTS RESERVED. THESE PLANS AND DRAWINGS MAY NOT BE REPRODUCED, ADAPTED OR FURTHER DISTRIBUTED, AND NO BUIILDINGS MAY BE CONSTRUCTED FROM THESE PLANS, WITHOUT WRITTEN PERMISSION OF ROMTEC, INC.

DATE: 10/8/2018
DRAWN BY: CR

()=REFERENCE DIMENSION
TOLERANCES (UNLESS OTHERWISE SPECIFIED)

FRACTIONS	±1/16
.XX	±.010
.XXX	±.005
ANGLES	±1/2°

Formed KICK VENT FRAME

16" x 24"

REV	DESCRIPTION	DATE	BY
1	SEE MASTER PRODDEUCTION REV LIST	10/29/18	CR
2	SEE MASTER PRODDEUCTION REV LIST	4/8/20	AM

BOM PART:

SHEET 2 OF 7

DWG. NO. XV-000-1005

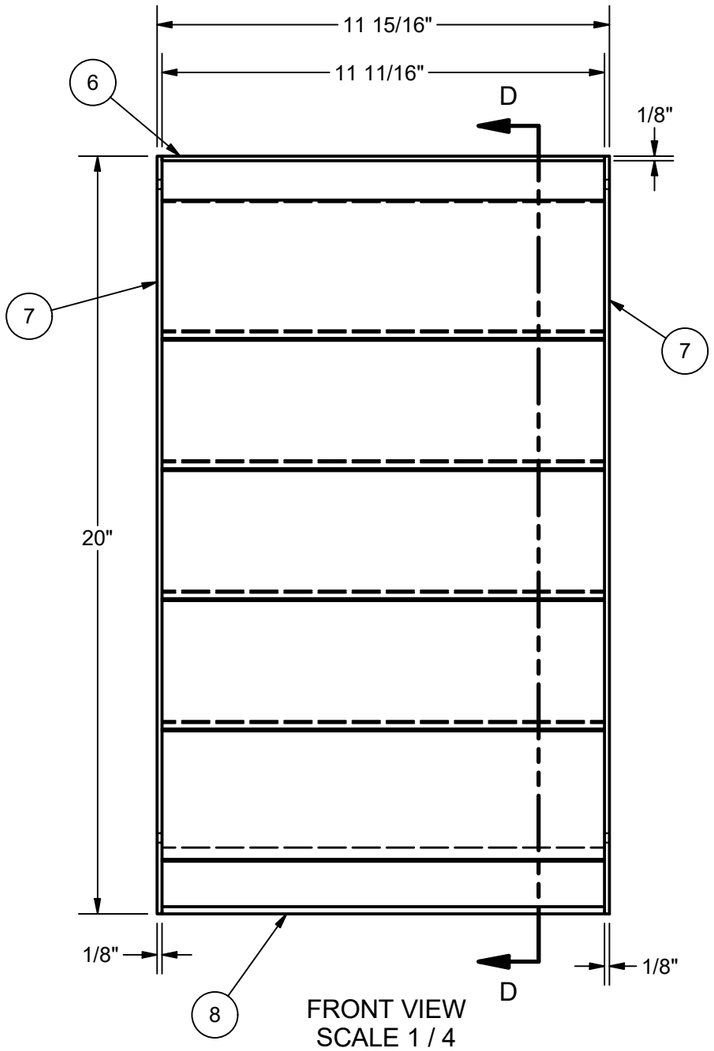

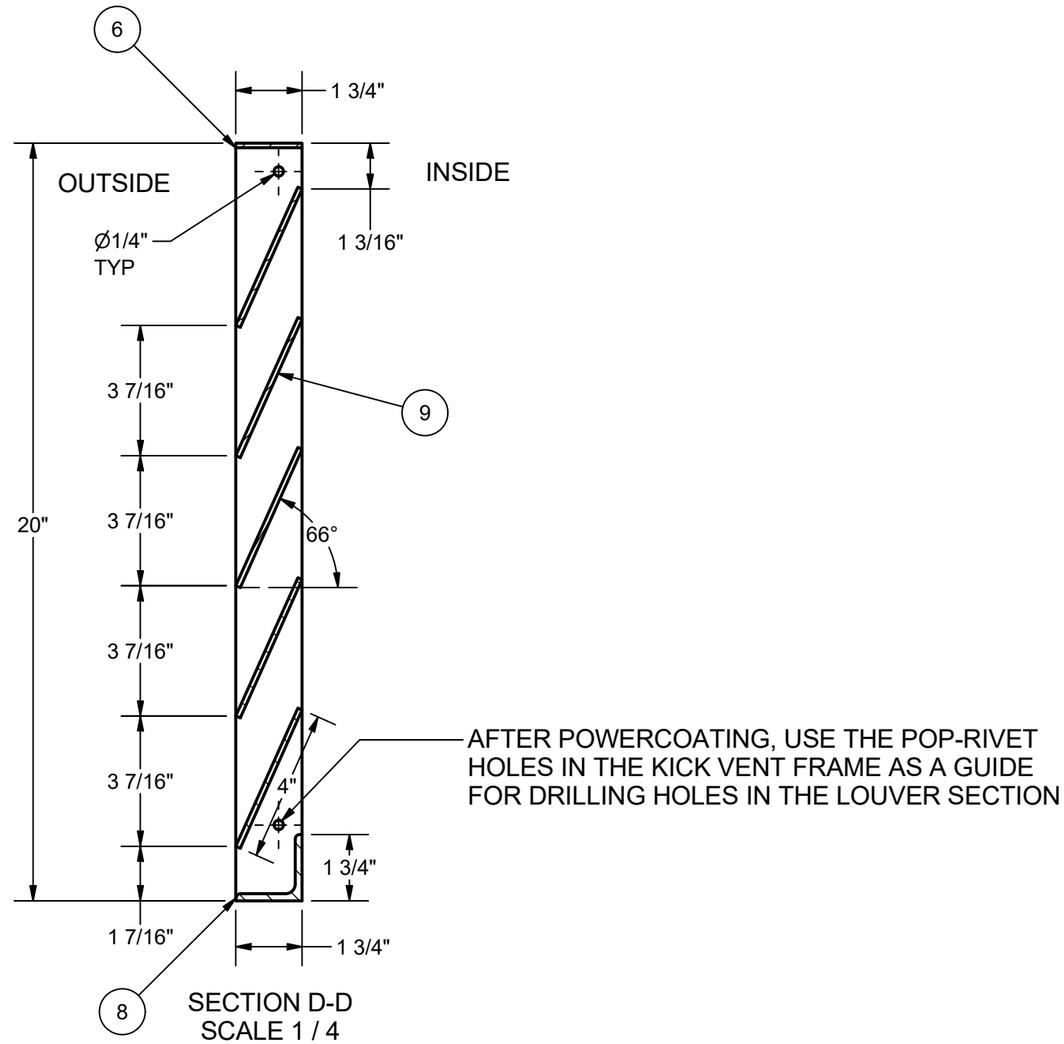

ROMTEC
18240 NORTH BANK ROAD
ROSEBURG, OR 97470
(541)-496-3541
FAX (541)-496-0803

MANUFACTURING

© 2018 ROMTEC, INC. ALL RIGHTS RESERVED. THESE PLANS AND DRAWINGS MAY NOT BE REPRODUCED, ADAPTED OR FURTHER DISTRIBUTED, AND NO BUIILDINGS MAY BE CONSTRUCTED FROM THESE PLANS, WITHOUT WRITTEN PERMISSION OF ROMTEC, INC.

DATE: 10/8/2018
DRAWN BY: CR

()=REFERENCE DIMENSION
TOLERANCES (UNLESS OTHERWISE SPECIFIED)

FRACTIONS	±1/16
.XX	±.010
.XXX	±.005
ANGLES	±1/2°

LOUVER SECTION

16" x 24"

REV	DESCRIPTION	DATE	BY
1	SEE MASTER PRODDEUCTION REV LIST	10/29/18	CR
2	SEE MASTER PRODDEUCTION REV LIST	4/8/20	AM

BOM PART:

SHEET 3 OF 7

DWG. NO. XV-000-1005

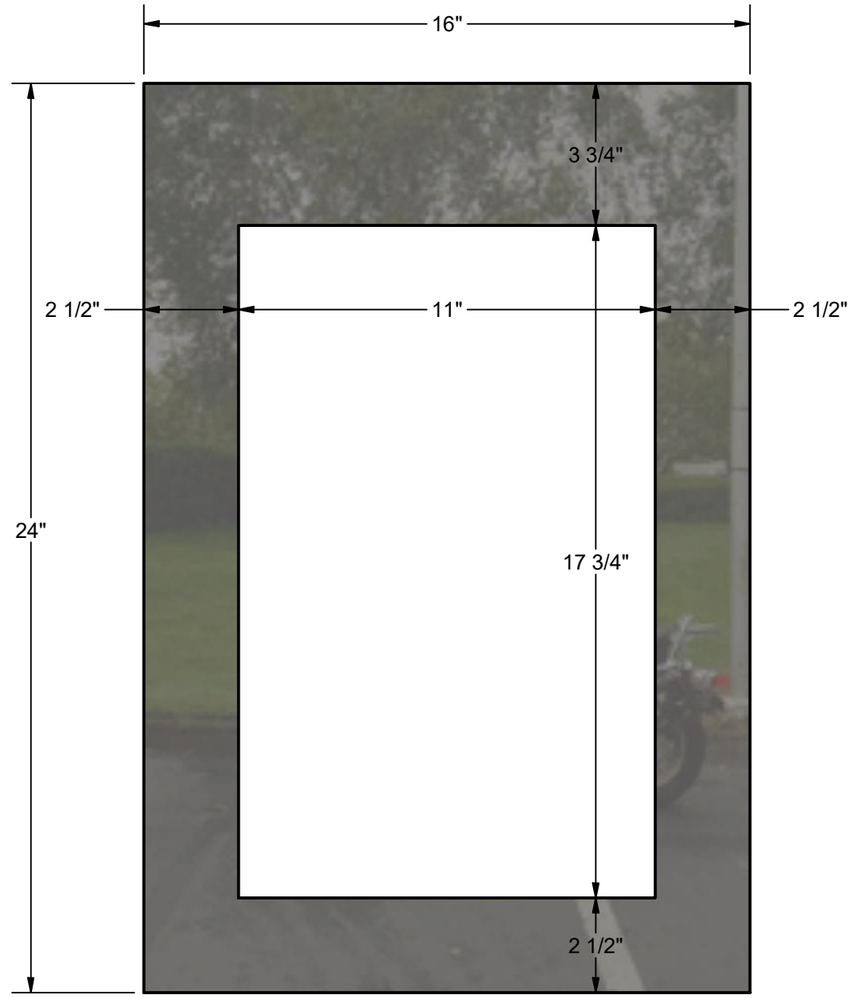

MATERIAL : 11 GA MILD STEEL

1

FRAME PLATE

SCALE: 1/4" = 1'-0"
QTY: 1

ROMTEC
18240 NORTH BANK ROAD
ROSEBURG, OR 97470
(541)-496-3541
FAX (541)-496-0803

MANUFACTURING

© 2018 ROMTEC, INC. ALL RIGHTS RESERVED. THESE PLANS AND DRAWINGS MAY NOT BE REPRODUCED, ADAPTED OR FURTHER DISTRIBUTED, AND NO BUIILDINGS MAY BE CONSTRUCTED FROM THESE PLANS, WITHOUT WRITTEN PERMISSION OF ROMTEC, INC.

DATE: 10/8/2018
DRAWN BY: CR

()=REFERENCE DIMENSION
TOLERANCES (UNLESS OTHERWISE SPECIFIED)

FRACTIONS	±1/16
.XX	±.010
.XXX	±.005
ANGLES	±1/2°

Formed KICK RESISTANT WALL VENT PARTS
16" X 24"

REV	DESCRIPTION	DATE	BY
1	SEE MASTER PRODDEUCTION REV LIST	10/29/18	CR
2	SEE MASTER PRODDEUCTION REV LIST	4/8/20	AM

BOM PART:

SHEET 4 OF 7

DWG. NO. XV-000-1005

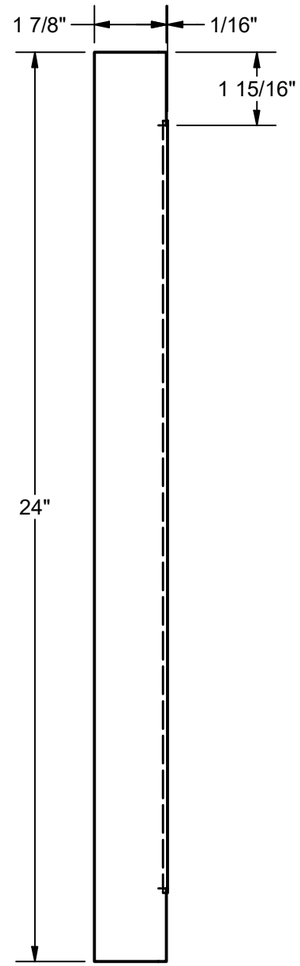

FRONT VIEW
SCALE 1 / 4

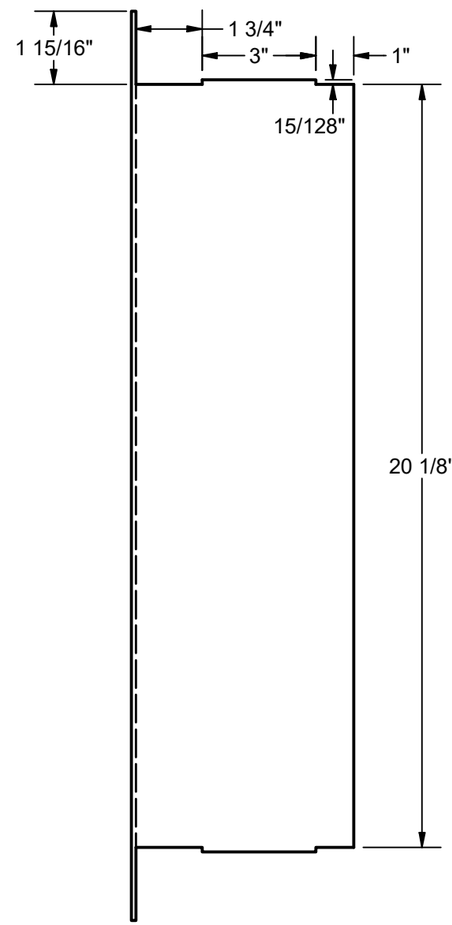

SIDE VIEW
SCALE 1 / 4

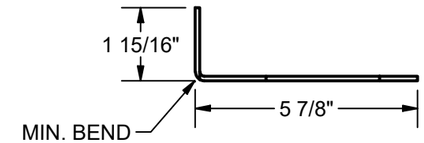

TOP VIEW
SCALE 1 / 4

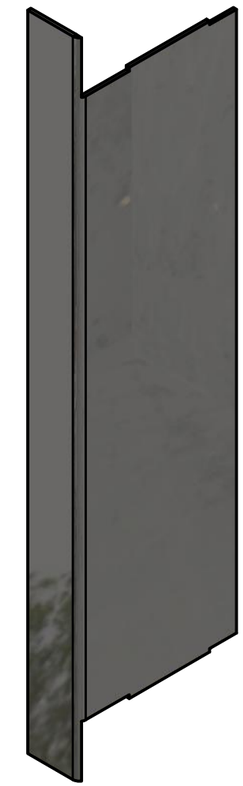

ISOMETRIC VIEW
SCALE 1 / 4

MATERIAL : 11 GA MILD STEEL

2

FORMED SIDES

SCALE: 1/4" = 1'-0"
QTY: 2

ROMTEC
18240 NORTH BANK ROAD
ROSEBURG, OR 97470
(541)-496-3541
FAX (541)-496-0803

MANUFACTURING

© 2018 ROMTEC, INC. ALL RIGHTS RESERVED. THESE PLANS AND DRAWINGS MAY NOT BE REPRODUCED, ADAPTED OR FURTHER DISTRIBUTED, AND NO BUIILDINGS MAY BE CONSTRUCTED FROM THESE PLANS, WITHOUT WRITTEN PERMISSION OF ROMTEC, INC.

DATE: 10/8/2018
DRAWN BY: CR

()=REFERENCE DIMENSION
TOLERANCES (UNLESS OTHERWISE SPECIFIED)

FRACTIONS	±1/16
.XX	±.010
.XXX	±.005
ANGLES	±1/2°

Formed KICK RESISTANT WALL VENT PARTS

16" X 24"

REV	DESCRIPTION	DATE	BY
1	SEE MASTER PRODDEUCTION REV LIST	10/29/18	CR
2	SEE MASTER PRODDEUCTION REV LIST	4/8/20	AM

BOM PART:

SHEET 5 OF 7

DWG. NO. XV-000-1005

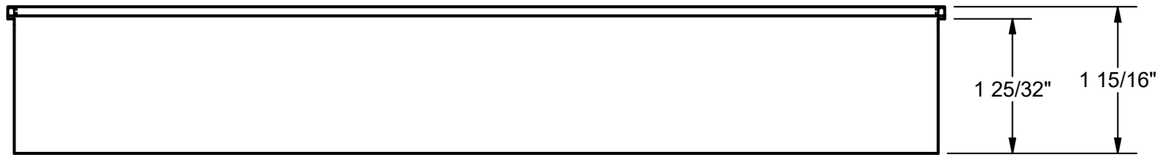

FRONT VIEW
SCALE 1 / 2

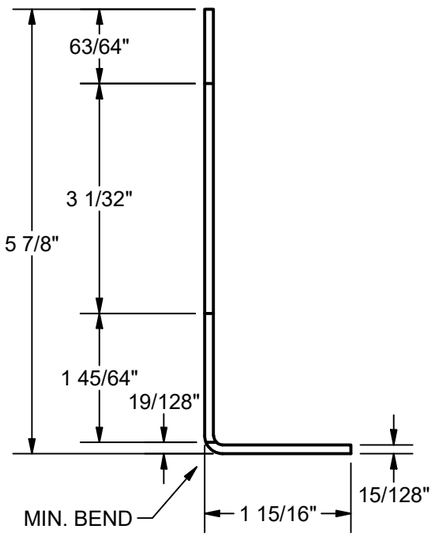

SIDE VIEW
SCALE 1 / 2

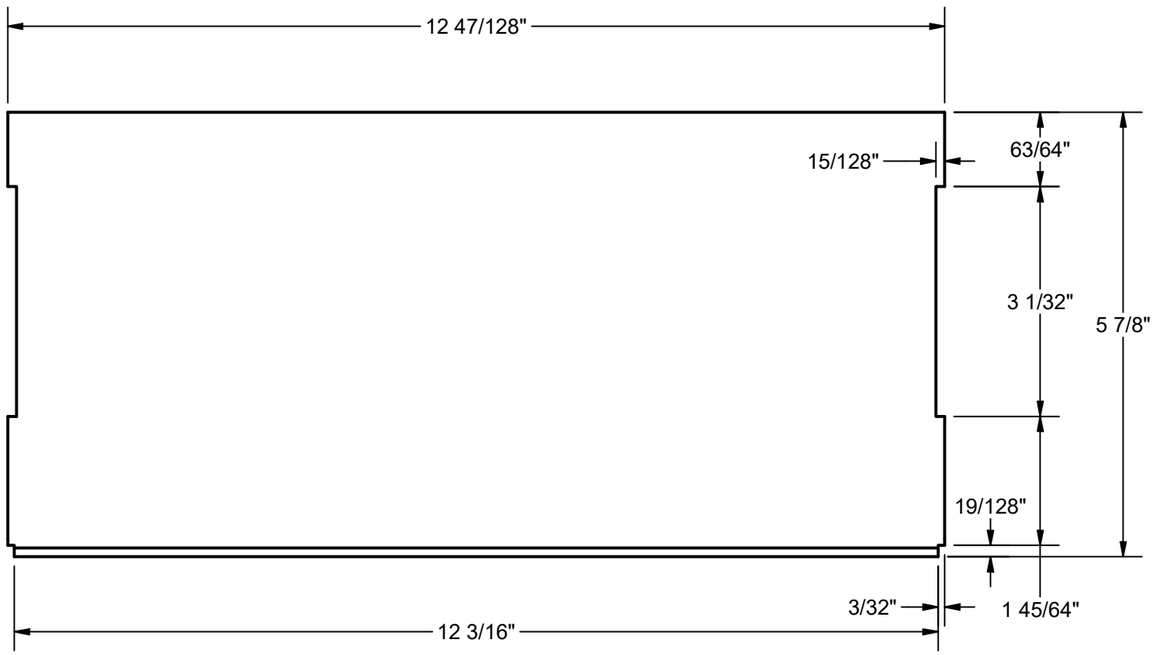

TOP VIEW
SCALE 1 / 2

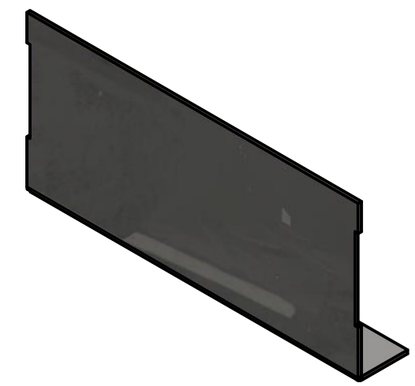

ISOMETRIC VIEW
SCALE 1 / 4

MATERIAL : 11 GA MILD STEEL

3 FORMED TOP & BOTTOM

SCALE: 1/2" = 1'-0"
QTY: 2

ROMTEC
18240 NORTH BANK ROAD
ROSEBURG, OR 97470
(541)-496-3541
FAX (541)-496-0803

MANUFACTURING

© 2018 ROMTEC, INC. ALL RIGHTS RESERVED. THESE PLANS AND DRAWINGS MAY NOT BE REPRODUCED, ADAPTED OR FURTHER DISTRIBUTED, AND NO BUIILDINGS MAY BE CONSTRUCTED FROM THESE PLANS, WITHOUT WRITTEN PERMISSION OF ROMTEC, INC.

DATE: 10/8/2018
DRAWN BY: CR

()=REFERENCE DIMENSION
TOLERANCES (UNLESS OTHERWISE SPECIFIED)

FRACTIONS	±1/16
.XX	±.010
.XXX	±.005
ANGLES	±1/2°

Formed KICK RESISTANT WALL VENT PARTS

16" X 24"

REV	DESCRIPTION	DATE	BY
1	SEE MASTER PRODDEUCTION REV LIST	10/29/18	CR
2	SEE MASTER PRODDEUCTION REV LIST	4/8/20	AM

BOM PART:

SHEET 6 OF 7

DWG. NO. XV-000-1005

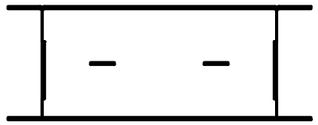

TOP VIEW
SCALE 1 / 8

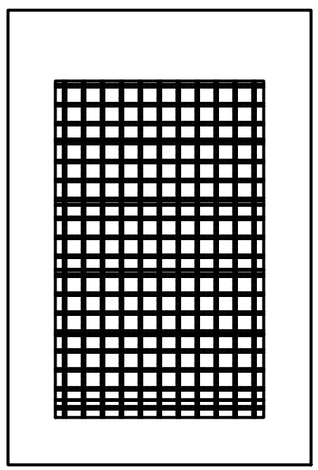

FRONT VIEW
SCALE 1 / 8

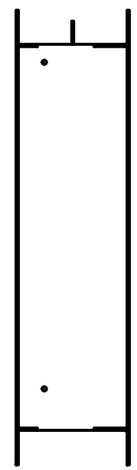

SIDE VIEW
SCALE 1 / 8

ROMTEC
18240 NORTH BANK ROAD
ROSEBURG, OR 97470
(541)-496-3541
FAX (541)-496-0803

MANUFACTURING

© 2018 ROMTEC, INC. ALL RIGHTS RESERVED. THESE PLANS AND DRAWINGS MAY NOT BE REPRODUCED, ADAPTED OR FURTHER DISTRIBUTED, AND NO BUIILDINGS MAY BE CONSTRUCTED FROM THESE PLANS, WITHOUT WRITTEN PERMISSION OF ROMTEC, INC.

DATE: 10/8/2018
DRAWN BY: CR

()=REFERENCE DIMENSION
TOLERANCES (UNLESS OTHERWISE SPECIFIED)

FRACTIONS	±1/16
.XX	±.010
.XXX	±.005
ANGLES	±1/2°

ACAD VIEWS

REV	DESCRIPTION	DATE	BY
1	SEE MASTER PRODDEUCTION REV LIST	10/29/18	CR
2	SEE MASTER PRODDEUCTION REV LIST	4/8/20	AM

BOM PART:

SHEET 7 OF 7

DWG. NO. XV-000-1005

GABLE WINDOW

The following is an example of the Romtec gable window included in the design of this building.

Specifications

- Angle Iron Frame – 2” X 2” X 1/8”
- Pre-assembled steel frame
- Polycarbonate is 1/8” thick
- Translucent Pebble Finish
- Powder coated, standard color is black
- See plans for dimensions

PARTS LIST			
ITEM	QTY	PART NUMBER	DESCRIPTION
1	1	XV-050-1001~exterior subassembly	XV-050-1001 EXTERIOR SUBASSEMBLY
2	1	XV-050-1001~interior subassembly	XV-050-1001 INTERIOR SUBASSEMBLY
3	1	XV-5630-5001-PC-0.25-CT-0.25 POLYCARBONATE 56.375 x 30.3125 x 6.375	1/4" POLYCARBONATE
4	14	FN-001-5007-ST-0.1875-RIVET 0.1875 x 0.5	RIVET 3/16" x 0.5"
5	4	FN-004-5002-ST-0.5-TITEN HD 0.5 x 4	TITEN HD SCREW 1/2" x 4"
6	7	FN-002-5008-ST-1.5-WOOD SCREW #12 x 1.5	WOOD SCREW #12 x 1-1/2"

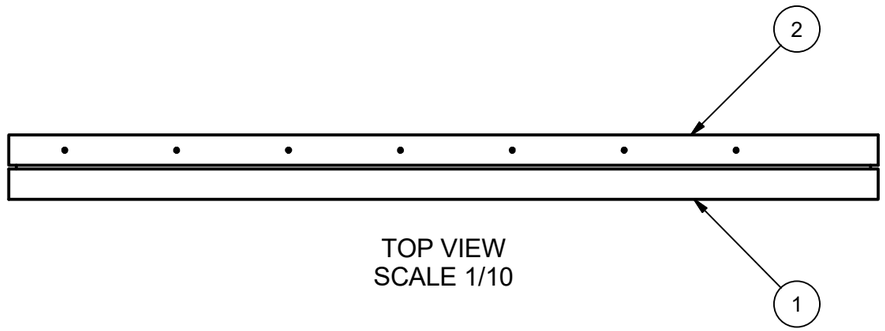

TOP VIEW
SCALE 1/10

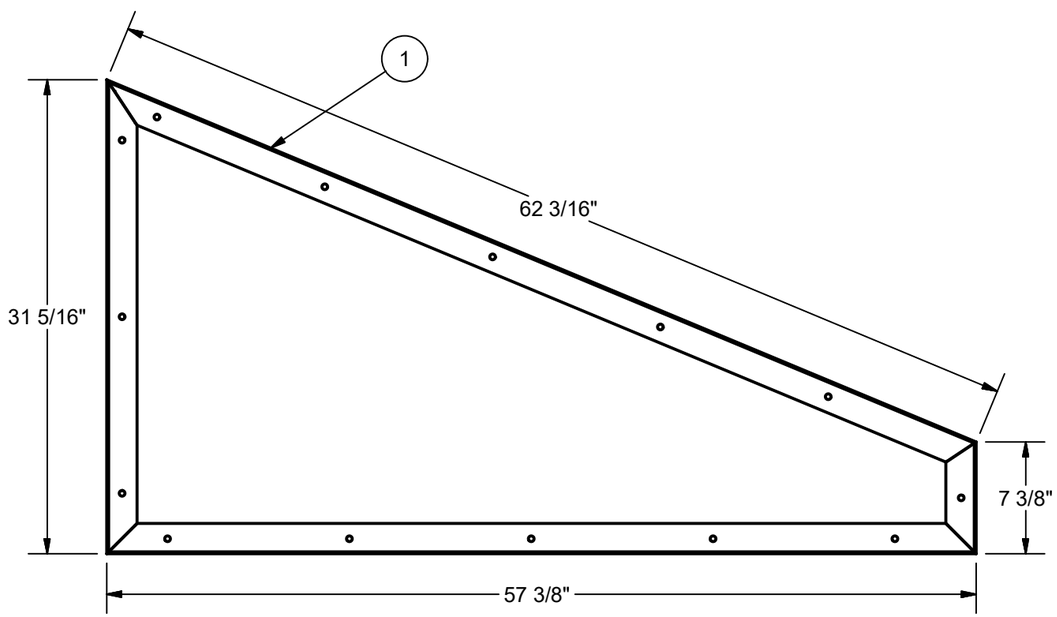

FRONT VIEW
SCALE 1/10

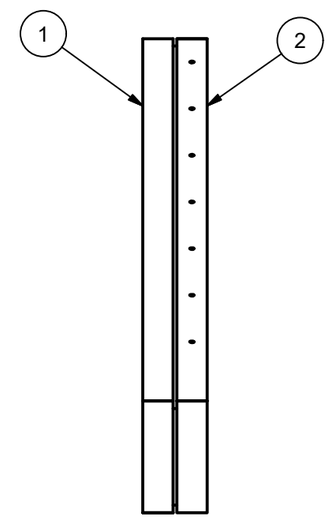

SIDE VIEW
SCALE 1/10

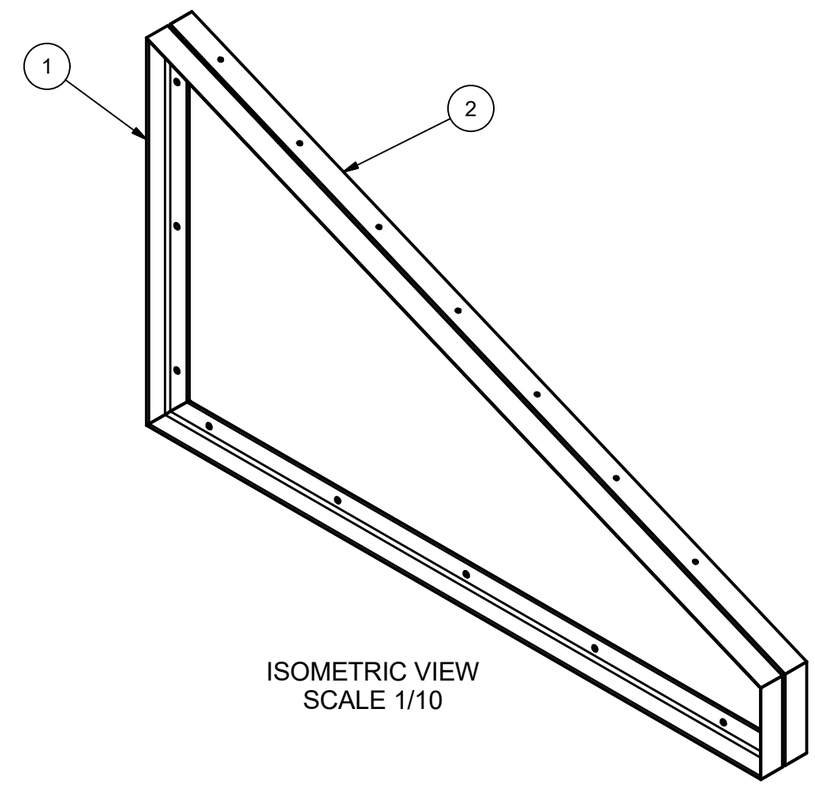

ISOMETRIC VIEW
SCALE 1/10

ROMTEC
18240 NORTH BANK ROAD
ROSEBURG, OR 97470
(541)-496-3541
FAX (541)-496-0803

MANUFACTURING

© 2018 ROMTEC, INC. ALL RIGHTS RESERVED. THESE PLANS AND DRAWINGS MAY NOT BE REPRODUCED, ADAPTED OR FURTHER DISTRIBUTED, AND NO BUIILDINGS MAY BE CONSTRUCTED FROM THESE PLANS, WITHOUT WRITTEN PERMISSION OF ROMTEC, INC.

DATE: 1/24/2018
DRAWN BY: LS

()=REFERENCE DIMENSION
TOLERANCES (UNLESS OTHERWISE SPECIFIED)

FRACTIONS	±1/16
.XX	±.010
.XXX	±.005
ANGLES	±1/2°

WINDOW

57-3/8" x 31-5/16" x 7-3/8", POLY

REV	DESCRIPTION	DATE	BY
1	SEE MASTER PRODUCTION REVISION LIST	4/20/18	LS
2	SEE MASTER PRODUCTION REVISION LIST	9/07/18	CR
3	REVISE PER PRODUCTION COMMENTS	9/24/19	AM

BOM PART:

SHEET 1 OF 6

DWG. NO. XW-050-1001

PARTS LIST			
ITEM	QTY	PART NUMBER	DESCRIPTION
A	1	XV-0057-5001-LL-0.125-HL-0.125 ANGLE 2 x 2 x 57.375 exterior	1/8" ANGLE 2" x 2" x 57-3/8" WITH 13/64" HOLES
B	1	XV-0007-5003-LL-0.125-CT-0.125 MS ANGLE 2 x 2 x 7.375 - exterior	1/8" MS ANGLE 2" x 2" x " 7-3/8" WITH 13/64" HOLE
C	1	XV-0062-5001-LL-0.125-CT-0.125 MS ANGLE 2 x 2 x 62.15625 - exterior	1/8" MS ANGLE 2" x 2" x 62-5/32" WITH 13/64" HOLES
D	1	XV-0031-5001-LL-0.125-CT-0.125 MS ANGLE 2 x 2 x 31.28125 - exterior	1/8" MS ANGLE 2" x 2" x 31-9/32" WITH 13/64" HOLES

NOTE: TO BE CONSISTENT WITH OTHER SHEETS IN THIS DOCUMENT, THE FRONT VIEW OF THE EXTERIOR ASSEMBLY HAS THE ANGLES BENDING TOWARD THE VIEWER, WHILE THE INTERIOR ASSEMBLY HAS THE ANGLES BENDING AWAY FROM THE VIEWER. SEE THE ISOMETRIC VIEWS.

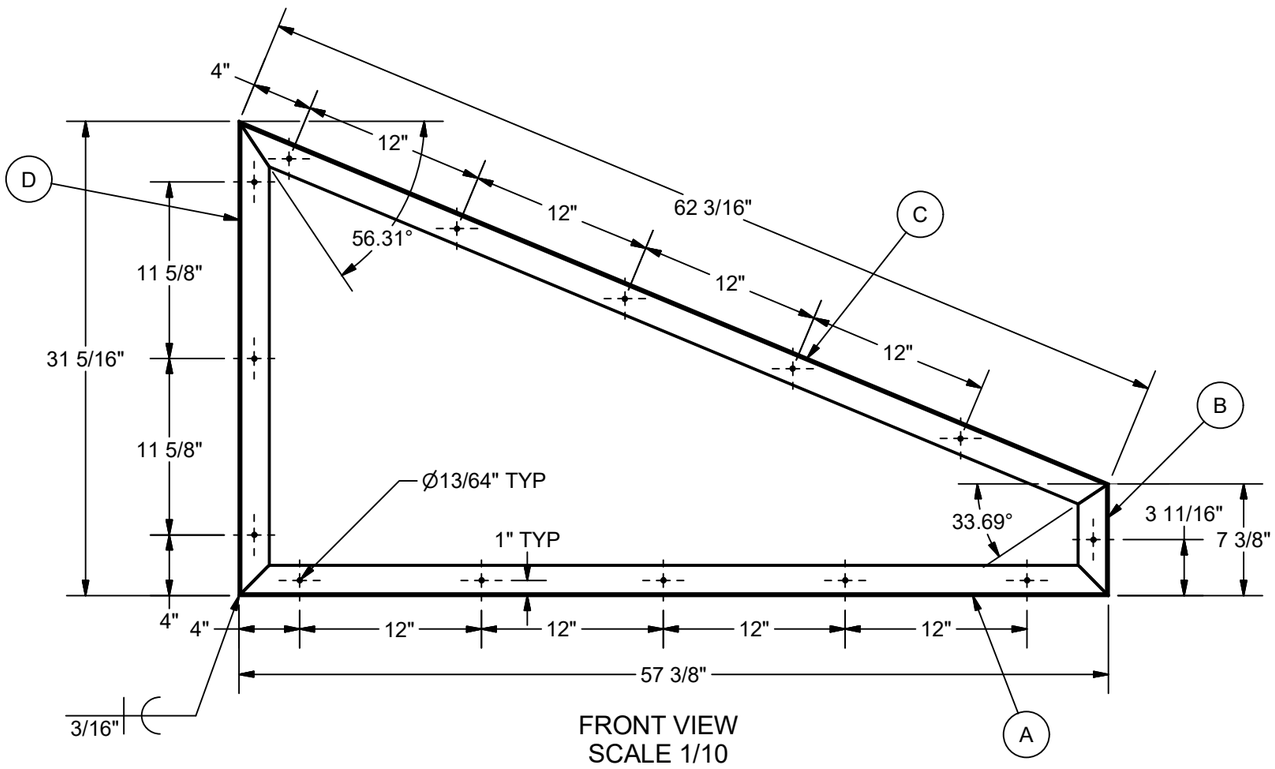

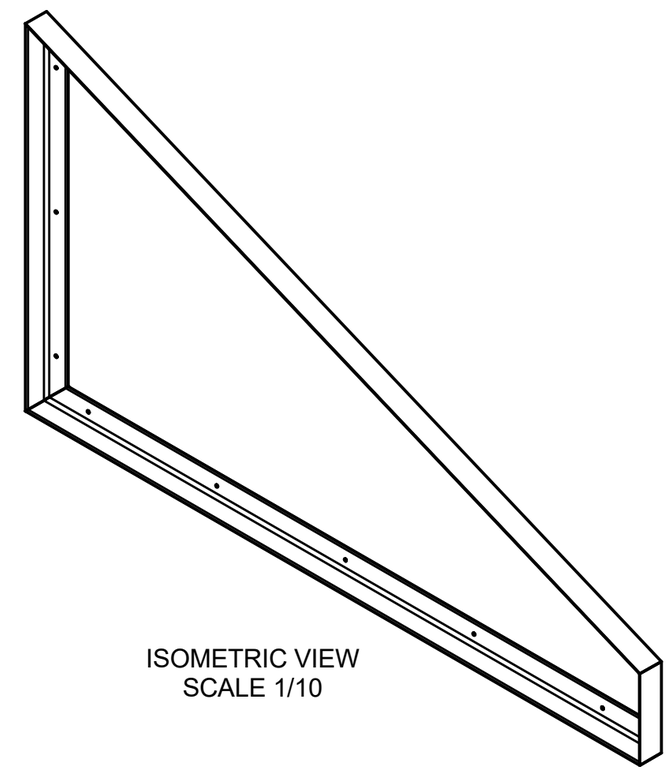

1 EXTERIOR SUBASSEMBLY

SCALE: 1/10

ROMTEC
18240 NORTH BANK ROAD
ROSEBURG, OR 97470
(541)-496-3541
FAX (541)-496-0803

MANUFACTURING

© 2018 ROMTEC, INC. ALL RIGHTS RESERVED. THESE PLANS AND DRAWINGS MAY NOT BE REPRODUCED, ADAPTED OR FURTHER DISTRIBUTED, AND NO BUIILDINGS MAY BE CONSTRUCTED FROM THESE PLANS, WITHOUT WRITTEN PERMISSION OF ROMTEC, INC.

DATE: 1/24/2018

DRAWN BY: LS

()=REFERENCE DIMENSION
TOLERANCES (UNLESS OTHERWISE SPECIFIED)

FRACTIONS	±1/16
.XX	±.010
.XXX	±.005
ANGLES	±1/2°

WINDOW

57-3/8" x 31-5/16" x 7-3/8", POLY

REV	DESCRIPTION	DATE	BY
1	SEE MASTER PRODUCTION REVISION LIST	4/20/18	LS
2	SEE MASTER PRODUCTION REVISION LIST	9/07/18	CR
3	REVISE PER PRODUCTION COMMENTS	9/24/19	AM

BOM PART:

SHEET 2 OF 6

DWG. NO. XW-050-1001

PARTS LIST			
ITEM	QTY	PART NUMBER	DESCRIPTION
A	1	XV-0057-5006-LL-0.125-HL-0.125 ANGLE 2 x 2 x 57.375 interior	1/8" MS ANGLE 2" x 2" x 57-3/8" WITH 11/16" AND 13/64" HOLES
B	1	XV-0007-5004-LL-0.125-CT-0.125 MS ANGLE 2 x 2 x 7.375 - interior	1/8" MS ANGLE 2" x 2" x 9-9/16" WITH 13/64" HOLE
C	1	XV-0062-5002-LL-0.125-CT-0.125 MS ANGLE 2 x 2 x 62.15625 - interior	1/8" MS ANGLE 2" x 2" x 62-5/32" WITH 9/32" AND 13/64" HOLES
D	1	XV-0031-5002-LL-0.125-CT-0.125 MS ANGLE 2 x 2 x 31.28125 - interior	1/8" MS ANGLE 2" x 2" x 31-9/32" WITH 13/64" HOLES

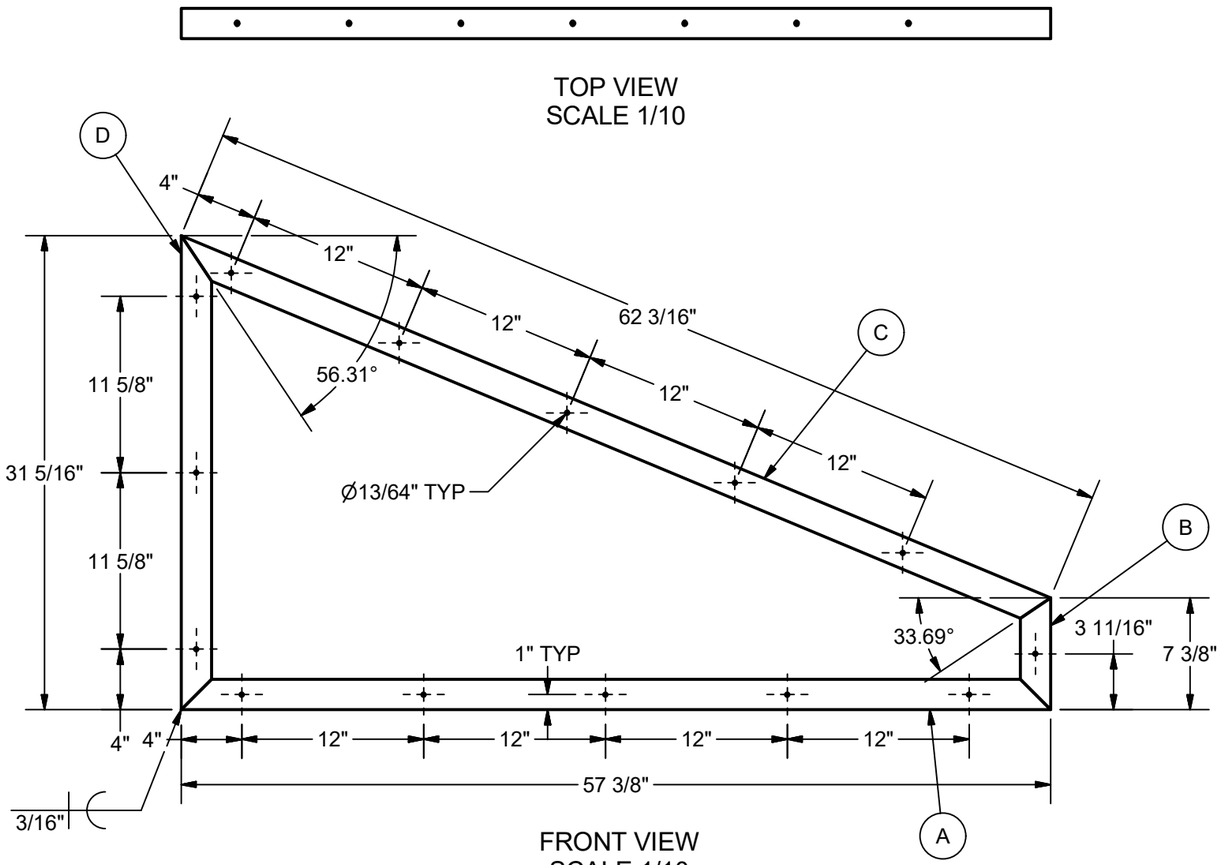

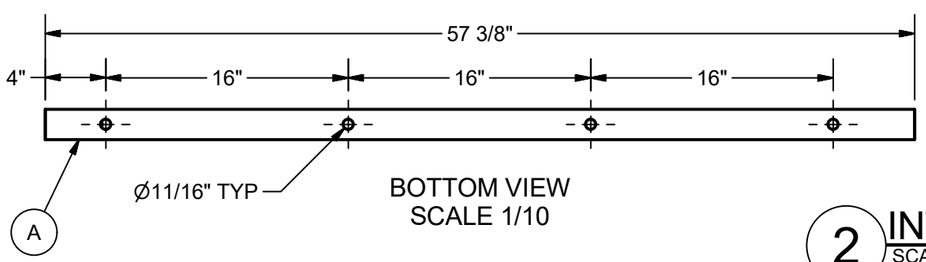

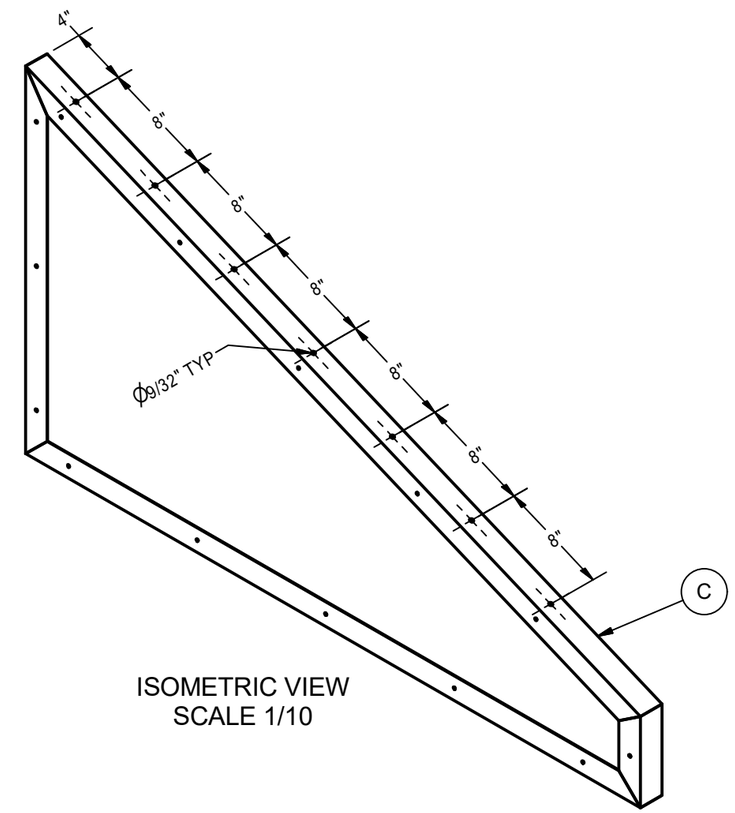

2 INTERIOR SUBASSEMBLY

SCALE: 1/10

ROMTEC
18240 NORTH BANK ROAD
ROSEBURG, OR 97470
(541)-496-3541
FAX (541)-496-0803

MANUFACTURING

© 2018 ROMTEC, INC. ALL RIGHTS RESERVED. THESE PLANS AND DRAWINGS MAY NOT BE REPRODUCED, ADAPTED OR FURTHER DISTRIBUTED, AND NO BUIILDINGS MAY BE CONSTRUCTED FROM THESE PLANS, WITHOUT WRITTEN PERMISSION OF ROMTEC, INC.

DATE: 1/24/2018
DRAWN BY: LS

()=REFERENCE DIMENSION
TOLERANCES (UNLESS OTHERWISE SPECIFIED)

FRACTIONS	±1/16
.XX	±.010
.XXX	±.005
ANGLES	±1/2°

WINDOW

57-3/8" x 31-5/16" x 7-3/8", POLY

REV	DESCRIPTION	DATE	BY
1	SEE MASTER PRODUCTION REVISION LIST	4/20/18	LS
2	SEE MASTER PRODUCTION REVISION LIST	9/07/18	CR
3	REVISE PER PRODUCTION COMMENTS	9/24/19	AM

BOM PART:

SHEET 3 OF 6

DWG. NO. XW-050-1001

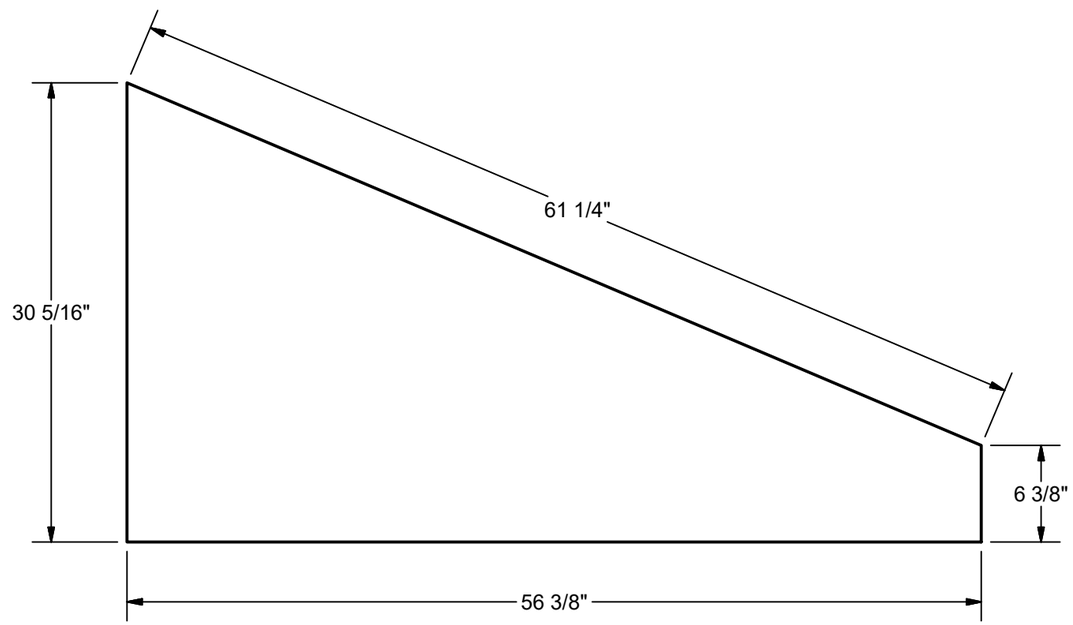

FRONT VIEW
SCALE 1/10

3 1/4" POLYCARBONATE
SCALE: 1/10

ROMTEC
18240 NORTH BANK ROAD
ROSEBURG, OR 97470
(541)-496-3541
FAX (541)-496-0803

MANUFACTURING

© 2018 ROMTEC, INC. ALL RIGHTS RESERVED. THESE PLANS AND DRAWINGS MAY NOT BE REPRODUCED, ADAPTED OR FURTHER DISTRIBUTED, AND NO BUIILDINGS MAY BE CONSTRUCTED FROM THESE PLANS, WITHOUT WRITTEN PERMISSION OF ROMTEC, INC.

DATE: 1/24/2018
DRAWN BY: LS

()=REFERENCE DIMENSION
TOLERANCES (UNLESS OTHERWISE SPECIFIED)

FRACTIONS	±1/16
.XX	±.010
.XXX	±.005
ANGLES	±1/2°

WINDOW

57-3/8" x 31-5/16" x 7-3/8", POLY

REV	DESCRIPTION	DATE	BY
1	SEE MASTER PRODUCTION REVISION LIST	4/20/18	LS
2			
3	REVISE PER PRODUCTION COMMENTS	9/24/19	AM

BOM PART:

SHEET 4 OF 6

DWG. NO. XW-050-1001

PARTS LIST			
ITEM	QTY	PART NUMBER	DESCRIPTION
1	1	XV-050-1001~exterior subassembly	XV-050-1001 EXTERIOR SUBASSEMBLY
2	1	XV-050-1001~interior subassembly	XV-050-1001 INTERIOR SUBASSEMBLY
3	1	XV-5630-5001-PC-0.25-CT-0.25 POLYCARBONATE 56.375 x 30.3125 x 6.375	1/4" POLYCARBONATE
4	14	FN-001-5007-ST-0.1875-RIVET 0.1875 x 0.5	RIVET 3/16" x 0.5"
5	4	FN-004-5002-ST-0.5-TITEN HD 0.5 x 4	TITEN HD SCREW 1/2" x 4"
6	7	FN-002-5008-ST-1.5-WOOD SCREW #12 x 1.5	WOOD SCREW #12 x 1-1/2"

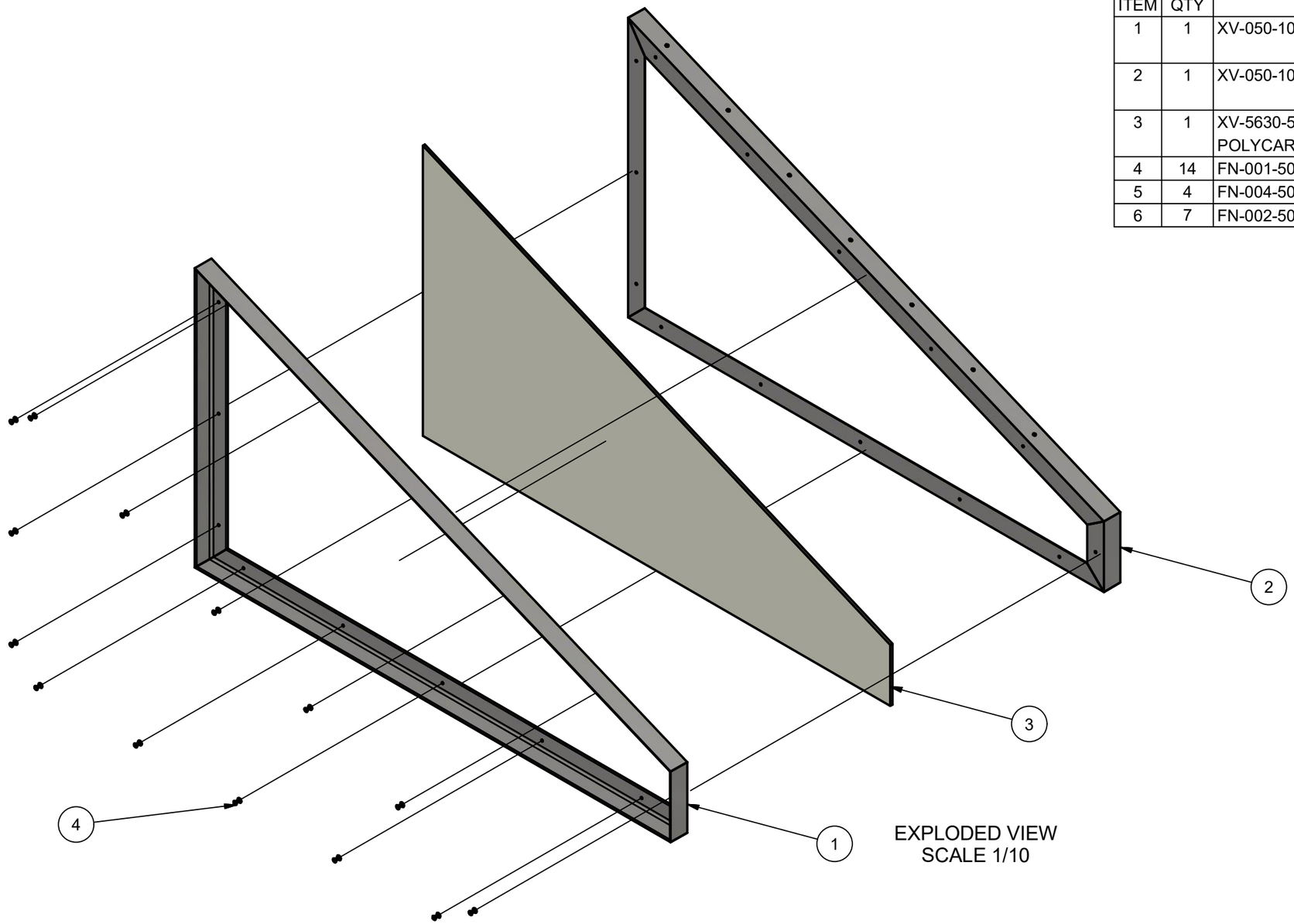

EXPLODED VIEW
SCALE 1/10

ROMTEC
18240 NORTH BANK ROAD
ROSEBURG, OR 97470
(541)-496-3541
FAX (541)-496-0803

MANUFACTURING

© 2018 ROMTEC, INC. ALL RIGHTS RESERVED. THESE PLANS AND DRAWINGS MAY NOT BE REPRODUCED, ADAPTED OR FURTHER DISTRIBUTED, AND NO BUIILDINGS MAY BE CONSTRUCTED FROM THESE PLANS, WITHOUT WRITTEN PERMISSION OF ROMTEC, INC.

DATE: 1/24/2018
DRAWN BY: LS

()=REFERENCE DIMENSION
TOLERANCES (UNLESS OTHERWISE SPECIFIED)

FRACTIONS	±1/16
.XX	±.010
.XXX	±.005
ANGLES	±1/2°

WINDOW

57-3/8" x 31-5/16" x 7-3/8", POLY

REV	DESCRIPTION	DATE	BY
1	SEE MASTER PRODUCTION REVISION LIST	4/20/18	LS
2			
3	REVISE PER PRODUCTION COMMENTS	9/24/19	AM

BOM PART:

SHEET 5 OF 6

DWG. NO. XW-050-1001

PARTS LIST			
ITEM	ITEM QTY	PART NUMBER	DESCRIPTION
1	1	FT-000-5018~6.0 Window Sill Flashing-DB-NSTD	WINDOW SILL FLASHING

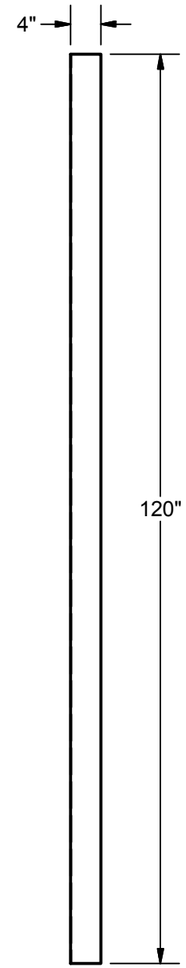

TOP VIEW
SCALE 1/20

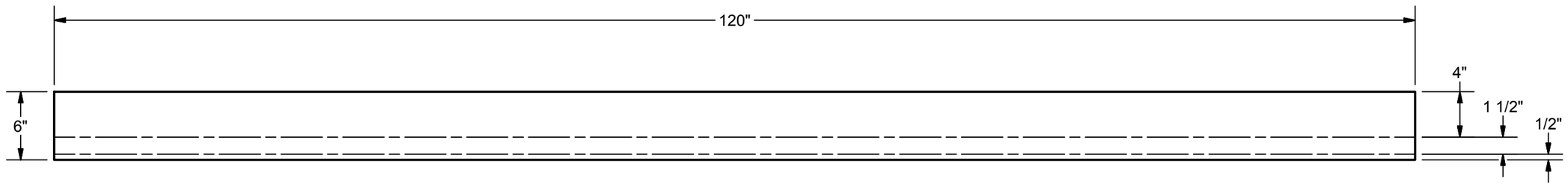

FLAT VIEW
SCALE 1 / 10

29 GA SHEET METAL
HEMMED
6" x 10'-0"

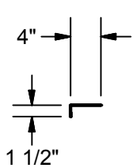

FRONT VIEW
SCALE 1/20

SIDE VIEW
SCALE 1/20

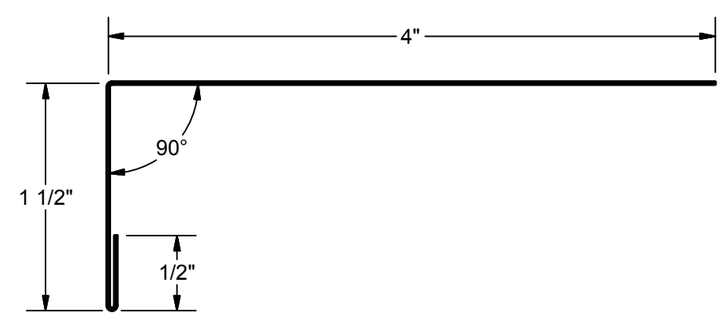

FRONT DETAIL VIEW
SCALE 1/1

ROMTEC
18240 NORTH BANK ROAD
ROSEBURG, OR 97470
(541)-496-3541
FAX (541)-496-0803

MANUFACTURING

© 2017 ROMTEC, INC. ALL RIGHTS RESERVED. THESE PLANS AND DRAWINGS MAY NOT BE REPRODUCED, ADAPTED OR FURTHER DISTRIBUTED, AND NO BUIILDINGS MAY BE CONSTRUCTED FROM THESE PLANS, WITHOUT WRITTEN PERMISSION OF ROMTEC, INC.

DATE: 11/7/2017
DRAWN BY: LS

()=REFERENCE DIMENSION
TOLERANCES (UNLESS OTHERWISE SPECIFIED)

FRACTIONS	±1/16
.XX	±.010
.XXX	±.005
ANGLES	±1/2°

FLASHING
SILL, 4" x 1-1/2"

REV	DESCRIPTION	DATE	BY
1	SEE MASTER PRODUCTION REVISION LIST	5/2/18	LS

BOM PART:

SHEET 1 OF 1

DWG. NO. FT-000-5018

FABRAL®
METAL WALL AND ROOF SYSTEMS

HORIZON 16®
PRODUCT DETAILS

A CLASSIC DESIGN FEATURING VALUE AND BEAUTY

Horizon 16 brings value, beauty and performance together while offering a superior roofing choice for residential and light commercial applications. The value is clear in the substrate and finish, featuring 26 gauge high strength Galvalume steel, ENERGY STAR® approved standard colors and 10 layers of protection provided by the Enduracote® paint system. Performance stands out with the proven snap together design, standard shadow lines and standard factory applied sealant.

Applications	Commercial & Residential
Finish	• Enduracote SMP paint system • Horizon 16 available in 12 colors
Warranty	• Lifetime film integrity warranty for walls and roofs • 30-year warranty against fade and chalk for walls and roofs • 20-year non-perforation warranty

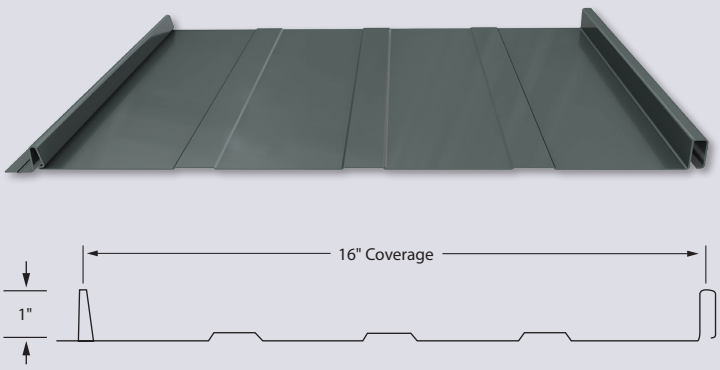

PANEL SPECIFICATIONS

- Minimum pitch recommended 3:12
- 16” coverage with 1” seam height
- 26 gauge high strength Galvalume steel
- UL 790 Class A Fire Resistance Rating
- UL 2218 Class 4 Hail Impact Resistance
- UL 580 Class 90 Uplift Test Rating
- Nail flange system for faster installation
- Stiffening ribs standard
- Custom cut to lengths up to 40
- Must be installed over solid decking
- Standard fastening pattern, 12” on center
- Strippable film for protection in shipping
- To reduce the likelihood of oil canning, install an ethofoam backer rod under the center of the panels prior to installation

FABRAL®
METAL WALL AND ROOF SYSTEMS

ENDURACOTE®
COLOR CHART - SMP PAINT SYSTEM

Classic Burgundy 853 IR=.26

Colors shown are as close to actual colors as allowed by the printing process. Actual metal samples are available. Colors may appear different when viewed at different angles & under different lighting conditions.

Due to product improvements, changes & other factors, we reserve the right to change or delete information herein without prior notice.

** Subject to premium pricing.

*All colors are ENERGY STAR® approved

FABRAL®
METAL WALL AND ROOF SYSTEMS

ENDURACOTE®
SMP COLOR CHART DETAILS

		Grandrib 3® Plus	Grandrib 3®	GR^G	Mighti-Rib®	5V Crimp	Prime Rib®	ProClad®	StrongClad®	7/8" Corrugated	2 ½" Corrugated	Ultra-Loc 16	Delta Rib	Val Rib III	MPV III	1 ½" SSR	Horizon S®	Horizon® 16
Availability																		
Northeast / Mid-Atlantic		X	X	X	X	X*										X	X	
Southern			X	X	X	X					X					X	X	
Midwest		X	X	X	X		X	X	X		X					X	X	
Western			X	X	X					X	X	X	X	X	X			X
Color																		
Brite White	824	●	● ■	724 ●	■		●	●	●		● ■		●	●	724 ●			
White	899	●	● ■	799 ●	■			●	●	■	■	■		●	799 ●	▲	■	■
Ivory	883	●	● ■	783 ●	■		●	●	●		●		●	●	783 ●			
Light Stone	887	●	● ■	787 ●	■			●	●	■	■			●	787 ●			
Tan	855	●	●	755 ●	■		●	●	●					●	755 ●			
Hickory Moss	870	●	● ■	770 ●	■			●	●		● ■		●	●	770 ●	▲	■	
Cocoa Brown	856	●	●	756 ●	■		●	●	●		● ■		●	●	756 ●			
Dark Brown	859	●	●					●			● ■		●	●				
Antique Bronze	854	●	● ■	754 ●	■	■		●	●	■	■	■		●		▲	■	■
Patina Green	893	●	●					●						●				
Evergreen	875	●	● ■	775 ●	■	■	●	●	●		● ■	■	●	●	775 ●	▲	■	■
Hartford Green	821	●	●		■			●			● ■	■	●	●				
Caribbean Blue	881	●	● ■		■			●	●		■	■		●	781 ●	▲	■	
Gallery Blue	826	●	●		■			●						●				
Brick Red	898	●	● ■	798 ●	■	■	●	●	●	■	● ■	■	●	●	798 ●	▲	■	
Brite Red	845	●	●					●						●				
Classic Burgundy	853	●	●	753 ●				●	●			■		●	753 ●	▲	■	■
Ash Gray	848	●																
Light Gray	889	●	● ■	789 ●	■		●	●	●		● ■	■	●	●	789 ●	▲	■	■
Charcoal Gray	851	●	● ■	751 ●	■	■	●	●	●		■	■		●	751 ●	▲	■	■
True Black	882	●	●	782 ●			●	●	●					●		▲	■	
Copper Penny	939	●	●									■		●	●	▲	■	■
Specialty Finishes																		
Crinkle Coat Charcoal	K51	●																
Crinkle Coat Burnished Slate	K39	●																
Crinkle Coat Evergreen	K75	●																
Crinkle Ash	K48	●																
Crinkle Matte Black	K82	●																
Crinkle Rural Red	K98	●																

Enduracote Warranty
- Lifetime film integrity warranty for walls & roofs
- 30-year warranty against fade & chalk for walls & roofs
- 10-year edge rust warranty against acid rain (Galvanized only)

Grandrib 3 PLUS Warranty
- Lifetime film integrity warranty for walls & roofs
- 30-year warranty against fade & chalk for walls & roofs
- 15-year edge rust warranty against acid rain (Galvanized only)
- 25-year non-perforation warranty against acid rain for walls; 20-year warranty for roofs

GR^G Warranty
- 40-year film integrity warranty for walls & roofs
- 30-year prorated fade & chalk for walls & roofs

● ~~Available in 29 gauge~~
■ Available in 26 gauge
▲ ~~Available in 24 gauge~~
* not painted

ENERGY STAR PARTNER

PROUDLY FINISHED WITH
SHERWIN-WILLIAMS.
Coil Coatings

Not all colors are available at all locations.
Offering subject to change without notice.

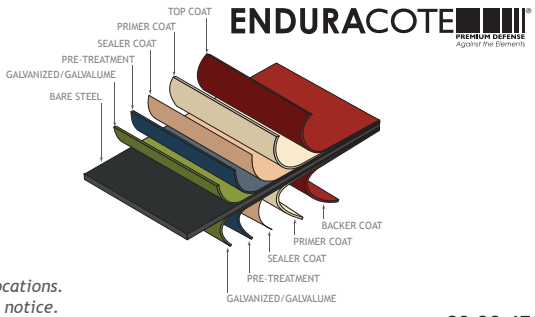

98-32-478
1-2019

Galvalume is a trademark of BIEC International Inc.
© 2019 Fabral

FABRAL®

HORIZON® S INSTALLATION GUIDE

AGRICULTURAL

LIGHT COMMERCIAL

RESIDENTIAL

Due to Product improvements, changes and other factors, Fabral reserves the right to change or delete information herein without prior notice or obligation to make changes in products previously purchased.

The details and written instructions described in this manual are suggested installation methods to ensure a quality application of our products, and should be considered as a guideline only. FABRAL recognizes that installation techniques can vary based upon builder and geographical preferences, and that there are other acceptable ways to install our products.

Fabral.com

HORIZON S

TABLE OF CONTENTS

Introduction..... 2
Fabral Core 3
Installation Guidelines..... 4
Recommended Tools and Equipment..... 4
Safety Concerns 5
Delivery, Handling and Storage..... 5
Estimating and Ordering 7-13
Fasteners..... 14
Flashings & Trims 15-16
Trim Details
- Eave..... 17-18
- Gables 18-19
- Sidewall 20
- Endwall..... 21
- Dormer 22
- Transition..... 22
- Gambrel 23
- Step Down 23
- Ridges 24
- Monoslope Ridges 25
- Valleys 26
- Pipe Boot Penetration 27
- Skylights..... 28-30
- Chimneys..... 31

Key Terms..... 32
Paint Systems & Warranty..... 33
Complete Contact Information..... 34

INTRODUCTION

The Right Tools.

This Horizon S Installation Guide, is the right tool to have at your fingertips. By knowing you have access to all of the right information from proper storage and installation instructions to trim and flashing details, you can be confident installing your Fabral materials.

Use this guide, and call us when further support is needed.

AGRICULTURAL

Fabral is the solution for your agricultural applications. We know that your barns and buildings must stand up to all weather conditions and last through the years.

LIGHT COMMERCIAL

For your light commercial needs, Fabral offers metal roofing and siding to match the various building types.

RESIDENTIAL

Homeowners feel proud and confident with Fabral metal roofing for the durability and sophisticated appearance.

FABRALCORE™

You challenge us. And we like it.

Your vision for a building and what you want to achieve makes us think harder. It'd be easy to say - "That won't work." Instead we go with - "Let's see what we can do." As the leading provider of metal for building envelope solutions, we push the envelope.

We like it when you bring us a problem because we know we'll find the solution. We have the products, the manufacturing and the know-how. We offer everything you need for the total building envelope solution. At our core, we relish a challenge.

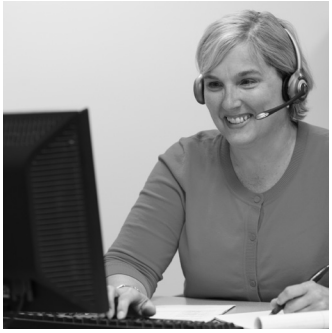

SYSTEM SUPPORT

- CUSTOMER CARE
- EDUCATION
- PROJECT CONSULTING
- TECHNICAL SUPPORT

To learn more contact us Fabral.com.

INSTALLATION GUIDELINES

Important Notice: This guide must be read in its entirety before beginning installation. This guide is supplied by FABRAL, Inc. for use by its customers. This is intended to be a guide only, and does not replace or supercede local or state building codes.

HORIZON S roofing must be applied on a minimum roof pitch of 3:12 or greater.

FABRAL, Inc. assumes no responsibility for any problems which might arise as a result of improper installation or any personal injury or property damage that might occur with the products use.

In certain conditions, panels may show slight waviness commonly referred to as "oil canning." This can occur as a result of the roll-forming process. Oil-canning does not affect the structural performance of the roof system, and is not cause for rejection of material. In areas of high snow or ice accumulations, snow guards, or snow blocks, may need to be added to an HORIZON S roof system to reduce or eliminate snow or ice from cascading from a higher roof and damaging lower roofs, roof valleys, gutters, or objects on the ground. Check with your installer and local building codes concerning the use of snow blocks or guards in your area and design appropriately.
For panel lengths over 30' please consider changing to 24 gage 1-1/2" SSR panels.

MINIMUM RECOMMENDED TOOLS & EQUIPMENT

Caulking Gun—Used for miscellaneous caulking and sealing to inhibit water infiltration.

Chalk Line—Used to assist in the alignment of panels, flashings, etc.

Electric Drill—Used to drill holes such as those required for pop rivet installation.

Electric Nibblers or Metal Shears—Used for general metal cutting, such as cutting the panels in hip and valley areas.
Some installers prefer using a circular saw with a metal cutting blade. This method may be faster, but it has some drawbacks:

- Saw cut edges are jagged and unsightly and tend to rust more quickly than sheared edges.
- Saw cutting produces hot metal filings that can embed in the paint and cause rust marks on the face of the panel.
- Saw cutting burns the paint & galvanizing at the cut edge leading to the onset of edge rust.

Hem Bending Tool—Used to hand bend the ends of the panels as indicated in the details of this manual. This tool is available from FABRAL.

Locking Pliers or Hand Break—Standard and "Duckbill" style for miscellaneous clamping and bending of parts.

Marking Tools—Indelible markers or scratching tools. No graphite pencils.

Rivet Tool—Used for miscellaneous flashing, trim applications and alternate eave detail.

Rubber Mallet – may be used to help snap panels together.

Scratch Awl—Can be made from old screw drivers ground to a point. Used to mark the steel, open hems, and as a punch.

Screw Gun—2,000 to 2,500 rpm Clutch type screw gun with a depth sensing nose piece is recommended to ensure proper installation of the screws. The following bits will be required:

- 1/4" hex
- #2 Square bit
- 5/16" hex

Snips—For miscellaneous panel and flashing cutting requirements.
Three pairs will be required: one for left edge, one for right edge, and one for centerline cuts.

Tape Measure—25 foot minimum.

Utility Knife—Used for miscellaneous cutting.

SAFETY CONSIDERATIONS

Never use unsecured or partially installed panels as a working platform. Do not walk on panels until they are in place on the roof and all of the fasteners have been installed.

Metal roofing panels are slippery when wet, dusty, frosty, or oily. Do not attempt to walk on a metal roof under these conditions. Wearing soft soled shoes will improve traction and minimize damage to the painted surface.

Always be aware of your position on the roof relative to your surroundings. Take note of the locations of roof openings, roof edges, equipment, co-workers, etc.

Always wear proper clothing and safety attire. Wear proper clothing when working with sheet metal in order to minimize the potential for cuts, abrasions and other injuries. Eye protection and gloves are a must when working with sheet metal products. Hearing protection should be used when power-cutting metal panels. When working on a roof, fall protection is highly recommended. Follow all OSHA Safety Requirements.

Use care when operating electrical and other power equipment. Observe all manufacturer's safety recommendations.

Roof installation on windy days can be dangerous. Avoid working with sheet metal products on windy days.

DELIVERY, HANDLING & STORAGE

Always inspect the shipment upon delivery. Check for damage and verify material quantities against the shipping list. Note any damaged material or shortages on the bill of lading at the time of delivery.

Handle panel bundles and individual panels with care to avoid damage. Longer bundles and panels may require two or more "pick points" properly spaced to avoid damage that can result from buckling and/or bending of the panels.

Store the panels and other materials in a dry, well ventilated area, away from traffic. Elevate one end of the bundle so that any moisture that may have accumulated during shipping can run off. If outdoor storage cannot be avoided, protect the metal with a breathable canvas or waterproof paper cover. Leave the bottom of the cover loose to allow air circulation. Do not use plastic which causes sweating or condensation. If left outside, be careful not to let water get trapped between the stacked panels. This can damage the panel finish. If possible, separate sheets to allow for airflow.

Wear clean, non-marking, soft soled shoes when walking on the panels to avoid shoe marks or damage to the finish. Step only in the flat area of the panels. Do not step on the ribs.

ESTIMATING & ORDERING

Step 1

A. Sketch a birds-eye view of the roof and label each section (see example below.)

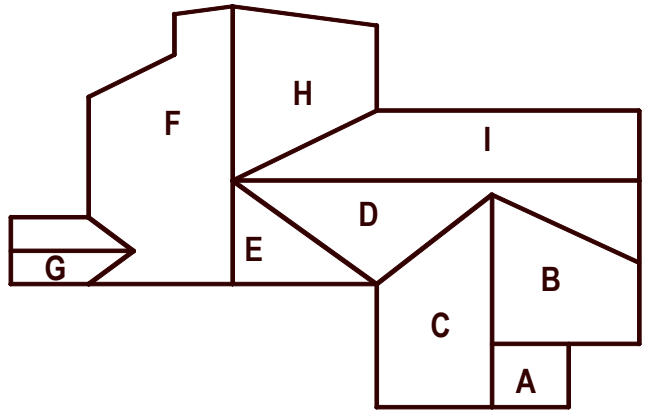

B. Sketch a diagram of each roof section. Show all measurements (see example below.) It is important to measure the exact center of the ridge to the eave edge. Do not allow anything for overhang.

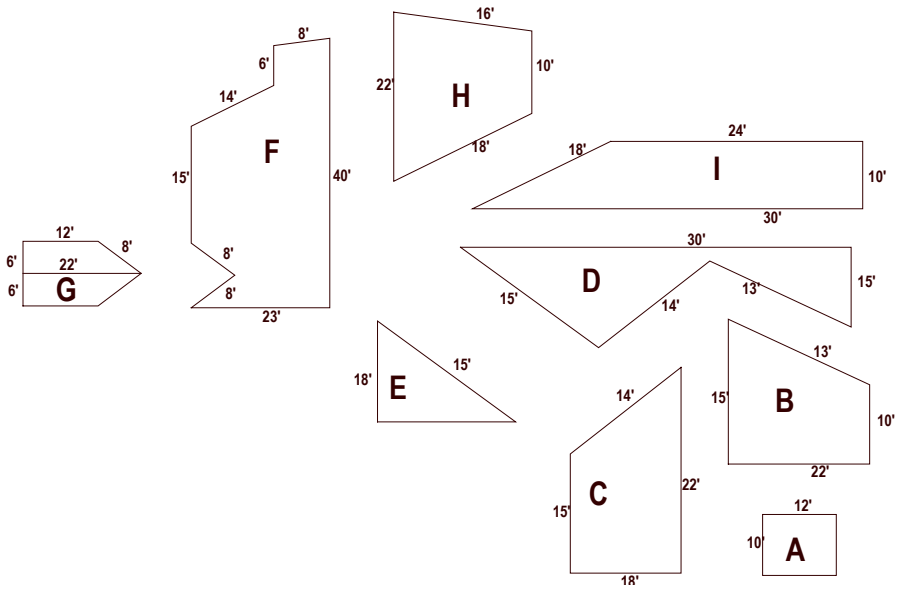

Additional Information Required: Roof Pitch, Skylights (Location & Size), Chimneys (Location & Size), and Size and Number of Pipe Penetrations.

Additional Identification: Ridge, Hips, Valleys, Gables, Etc.

Step 2

With the information from the diagram you completed in Step 1, you are now ready to complete your roofing panel cut list. Each panel is 16" wide so the only measurement you need is the distance from the eave to the ridge. You can then determine the number of panels needed to cover the length from gable to gable. (See example Diagram A below.)

DIAGRAM A

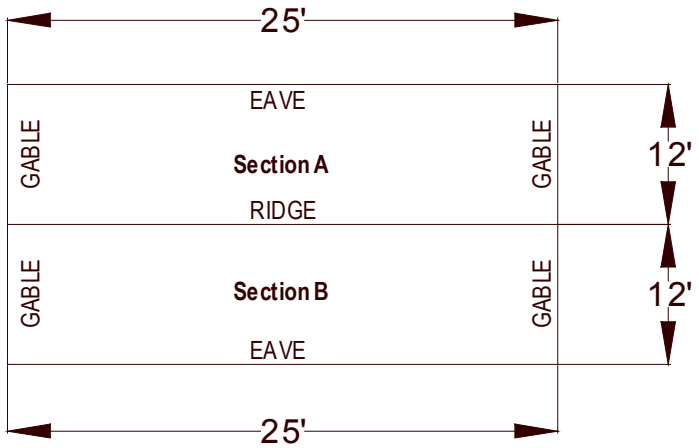

The length from the eave to the ridge is 12'. The length of the ridge is 25'; therefore, the number of panels to complete one side of the house is 25' ÷ 1.33'(16")= 19 pcs. Your materials list should look like Sample B.

SAMPLE B
Section A - 19 pcs. X 12'

Now look at your roof diagram and figure out your next section of roof. Refer back to Diagram A. Section B of this sample roof is the same as Section A. Your materials list should now look like Sample C below.

SAMPLE C
Section A—19 pcs. X 12'
Section B—19 pcs. X 12'

If your home has hips or valleys, refer to Diagram 1A on page 8.

Step 2 (cont.)

DIAGRAM 1A

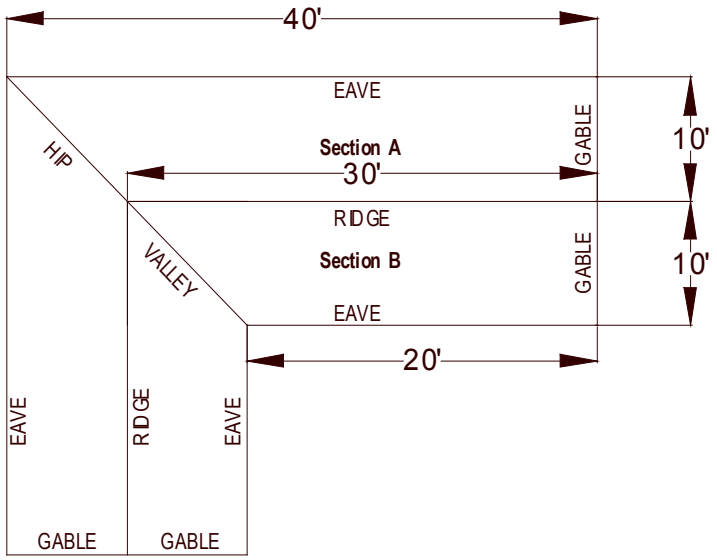

Start with section A. The eave length is 40′ and the ridge length is 30′, with a difference of 10′. You will need 23 pcs. X 10′ to reach the area where the hip starts. Remember that you have 10′ remaining to cover the area, or 8 more panels. Determine the length of each panel going into the valley by calculating the roof's pitch. Pitch is how much rise your roof has in inches for every foot of horizontal run. Use the Hip and Valley Chart below to ensure you order the correct panel length for hips and valleys, keeping in mind, that panels are cut to the nearest full inch. For example, Diagram 1A is a 4/12 pitch (4/12p). According to the chart below, we know each panel will be 17″ shorter. Since we are measuring from the longest point of the angle, your first piece will be the same length as the full eave to ridge measurement and each piece after will be 17″ shorter. (Your list of Section A should look like Sample D on page 9.)

Hip & Valley Chart
When determining the panel length needed for a hip or valley, the panel will either be shorter or longer as you go up or down the hip or valley. The chart below shows you the amount to add or subtract from each panel according to the pitch of your roof.

3/12p = 16 1/2″	6/12p = 18″	9/12p = 20″
4/12p = 17″	7/12p = 18 1/2″	10/12p = 20 3/4″
5/12p = 17 1/2″	8/12p = 19″	11/12p = 21 3/4″
		12/12p = 22 3/4″

Example: 3/12 pitch = 16 1/2″ panel length
Note: When determining panel length, always round up to the next full inch.

SAMPLE D

Section A 24 pcs. X 10′
1 pc. X 8′-7″
1 pc. X 7′-2″
1 pc. X 5′-9″
1 pc. X 4′-4″
1 pc. X 2′-11″
1 pc. X 1′-6″
1 pc. X 1′-0″

Step 3

Refer to the Home Legend of page 16 for trim placement. From this diagram, you can determine the names and placement of the trim needed. All trim is produced in 10′6″ sections only. Remember to allow 6″ of overlap on all trims. Use the estimating section to determine trim quantities.

For applications of trims and flashings, see pages 17-26.

Calculate total lineal feet of panels = (pcs x ft-inches) total sum = _____ In ft.
Use on next page for number of screws needed.

Accessories

Determine total lineal feet of conditions listed below and then fill that number in accordingly at each spot listed, Perform calculating to determine number of pieces for each item and circle flashing design required.

Eave _____
Hip_____
Sidewall
Valley_____
Gambrel _____
Clear Story _____
Chimney (Qty. and size) _____

Ridge_____
Gable _____
Endwall_____
Transition _____
Swept Wing or Flying Gable _____
Roof Pitch _____″ in 12″
Skylight (Qty. and size) _____

ESTIMATING & ORDERING

Step 3 (cont.)

A. Eave _____ ft ÷ 10** = _____ pcs. (WEF1 or WEF2 & WEF3 or WEF4)

B. (Ridge _____ ft ÷ 10) *** + (Hip _____ ft ÷10) = _____ pcs (WRH3 or WRH5)

C. Gable _____ ft ÷ 10 = _____ pcs (WGF4)

D. Sidewall _____ ft ÷ 10 = _____ pcs (WSW4)

E. Endwall _____ ft ÷ 10 = _____ pcs (WEW2) Pitch _____

F. Valley _____ ft ÷ 10 = _____ pcs (RV2 & WVC1) Pitch _____

G. Transition _____ ft ÷10 = _____ pcs (WTF1 & WVC1) Pitch from to _____

H. Gambrel _____ ft ÷ 10 = _____ pcs Mod. (WTF1 & WVC1) Pitch from to _____

I. Monoslope _____ ft ÷ 10 = _____ pcs. (WRH4)

J. (Perimeter of Skylights/Chimney _____ ft ÷5) = _____ pcs WSCB1 & _____ pcs WSCT3

K. (Total lineal feet of panels _____ ft) = _____ pcs #10 x 1" Waferhead Screws (Panels)

L. (Valley _____ ft x 2) + (Transition _____ ft) + (Gambrel _____ ft) + (Swept Wing Gable ft) =
_____ pcs #10 Waferhead Screws (Accessories)

M. (Eave _____ ft) + (Ridge _____ ft x 6) + (Gable _____ ft ÷ 2) + (Sidewall _____ ft) +
(Endwall _____ ft x 3) + (Hip _____ ft x 6) + (Transition _____ ft x 3) +
(Gambrel _____ ft x 3) + (Monoslope _____ ft x 4) = _____ pcs #14 x 1" Mill Point Painted

N. (Ridge _____ ft x 2) + (Sidewall _____ ft) + (Endwall _____ ft) + (Hip _____ ft x 2) +
(Transition _____ ft) + (Gambrel _____ ft) + (Monoslope _____ ft) =
_____ pcs #12 x ¾" Stitch Screw Painted

O. (Eave _____ ft x .0125) + (Valley _____ ft x .0125) + (Swept Wing Gable _____ ft x .0625) =
_____ Tubes of Sealant

P. (Eave _____ ft) + (Gable _____ ft) + (Ridge _____ ft x 4)*** + (Valley _____ ft x 2) +
(Transition _____ ft x 3) + (Gabrel ___ ft x 3) + (Perimeter of skylight / chimney _____ ft)
+ (Sidewall _____ ft) = _____ Total lf ÷ 40 = _____ Rolls of Butyl Sealant

Q. Hem Bending Tool = _____ pcs Hem Bending Tool

R. (Hip _____ lf x 2) ÷ 19.68 = _____ rolls.- Sealer Strip (1" x 1" x 19.68' roll)

S. (Non-Vented ridge ____ ft ÷ 1.33) + (Transition ___ ft ÷ 2.66) + (Gambrel ___ ft ÷ 2.66) =
_____ pcs HORIZON S Outside Closure x 32", pre-notched (covers 2 panels)

T. (Vented Ridge ft ÷ 1.33) = _____ pcs. Marco LP2 Vent (Sold by pcs.)

U. Pipe Boots: _____ #3 (¼" to 5" dia. pipe) _____ #5 (4 ¼" to 7 ½" dia. pipe)
_____ #8 (7" to 13" dia. pipe) (add screws and sealant for boots)

** Note: 10 results from 10'6" standard length flashings with 6" overlap.

Step 3 (cont.)

When determining the number of fasteners needed, follow these GENERAL rules:

1. For every linear foot of roof panel ordered, you need 1 panel screw.
2. Remember, these are GENERAL rules; the actual amount may vary slightly for each different roof application.
3. At this point, your materials list for Diagram A on page 7 should look like Sample E below.

SAMPLE E

Section A	19 pcs. X 12′
Section B	19 pcs. X 12′
5 pcs.	Eave Trim 5/12p
3 pcs.	Ridge Cap 5/12p
5 pcs.	Gable Trim
600 pcs.	#10 x 1″ Waferhead Panel Screws
300 pcs	#14 x 1″ Mill Point screws
100	#12 x ¾″ Stitch Screws
1 tube	Sealant
3 Rolls	Butyl Sealant Tape
1 each	Hem Bending Tool (optional)

You are now ready to order your new metal roof. Simply fill out the following form and provide it to your local FABRAL dealer or distributor. If you have any questions, or need to have your material list checked, please contact your local FABRAL dealer or distributor.

HORIZON S - Order Form

Panels: Color = _____

_____ pcs. @ _____ ft. _____ in. _____ pcs. @ _____ ft. _____ in.
_____ pcs. @ _____ ft. _____ in. _____ pcs. @ _____ ft. _____ in.
_____ pcs. @ _____ ft. _____ in. _____ pcs. @ _____ ft. _____ in.
_____ pcs. @ _____ ft. _____ in. _____ pcs. @ _____ ft. _____ in.

Accessories:

_____ pcs. of Eave Flash _____ (flashing code ex: WEF1)
_____ pcs. of Ridge Flash _____ (WRH3, WRH5)
_____ pcs. of Gable Flash WGF4 _____ pcs. of Sidewall Flash WSW4
_____ pcs. of Endwall Flash WEW2 _____ pcs. of Valley Flash RV2
_____ pcs. of Transition Flash WTF1 _____ pcs. of Gambrel Flash WTF1 mod.
_____ pcs. of Swept Wing Gable WEF1, etc _____ pcs. of Monoslope Flash WRH4
_____ pcs. of #10x1″ Waferhead Screw (Panel Screws) _____ pcs. of #14 x 1″ MP Painted
_____ pcs. of #10x1″ Woodfast Screw (Accessories Screws)
_____ pcs. of #12 x 3/4″ Stitch Screw Painted
_____ pcs. of Tube Caulk _____ rolls. of Butyl Sealant Tape
_____ pcs. of WSCB1 _____ pcs. of WSCT3
_____ pcs. of Hem Bending Tool _____ pcs. of Touch-up Paint
_____ pcs. of Vented Closure _____ pcs. of HORIZON S Outside Closure
_____ pcs. of Pipe Flash _____ Roof Underlayment

NEW ROOF
APPLICATION

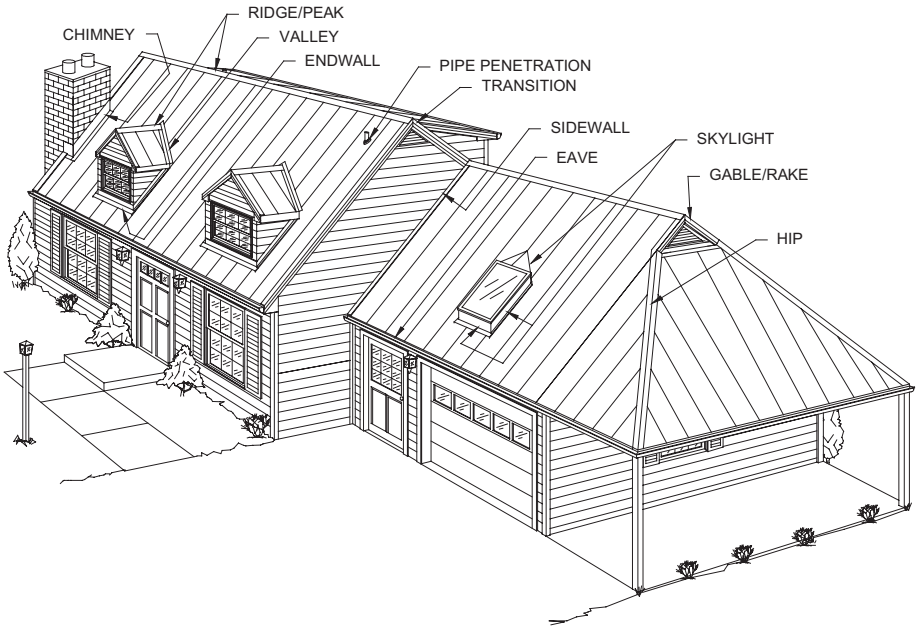

1. Make sure there are no nails or other objects protruding from the substrate that might puncture the underlayment or damage the roof panels. Clean all debris from the deck.

2. Check all details for possible roof penetrations which must be added to the deck prior to roof panel installation (vented ridge for example).

3. Cover the entire roof deck with synthetic underlayment (hereinafter referred to as underlayment). Begin at the eave at the gable end and roll out the underlayment horizontally (parallel to the eave). Allow each consecutive course to overlap the previous one by 4-6". Overlap the end a minimum of 6" when starting a new roll of underlayment. Areas of underlayment that have been torn or cut should be replaced or repaired prior to installation of the metal roof. (See Illustration #1 below) Ice & Water shield should be used in cold climates starting at the eave and extending at least 24" past exterior walls. Tip: To reduce the risk of plywood clips showing through the panels, place a 6"x 6" piece of peel and stick underlayment or 30lb felt over plywood clips prior to installation of underlayment.

4. Place an alignment line along the gable end where the first roof panel will be installed. THIS LINE MUST BE LOCATED 1/2" IN FROM THE GABLE EDGE OF THE ROOF DECK AND SQUARE WITH THE EAVE LINE. Various methods exist for ensuring that the line is square. Call your nearest FABRAL representative if you need assistance. (See Illustration #2)

ILLUSTRATION #1

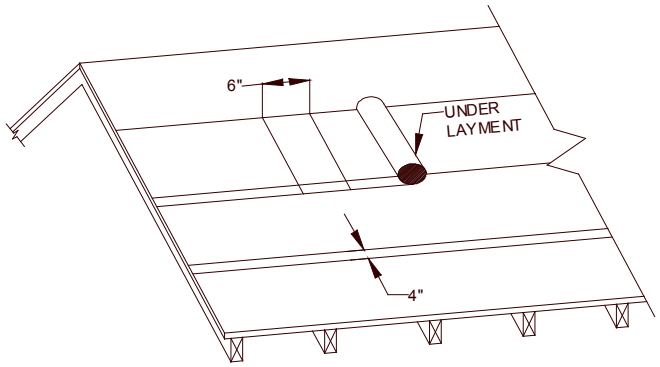

ILLUSTRATION #2

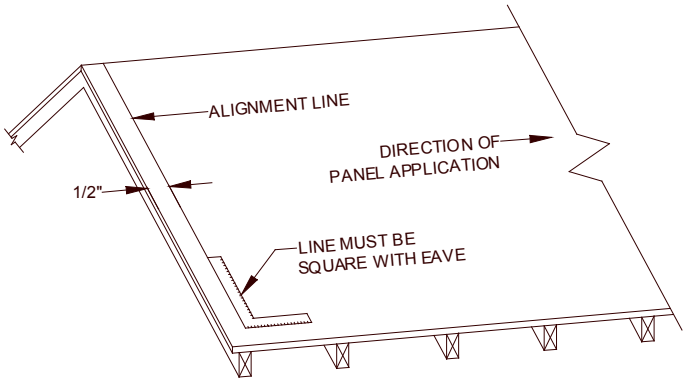

EXISTING ROOF
APPLICATION

In many cases, FABRAL's HORIZON S Panels can be installed over existing roofing.

Some jurisdictions will allow retrofit over certain types of roofing without tear-off of the old roofing. For best results, always use furring strips and 30 lb. felt paper over old shingles. Furring strips can be installed 12" o.c. with HORIZON S to provide adequate panel support and wall capability. Check with your local codes or building department for the specific requirements in your area.

If the roof is to be stripped down to the existing decking, follow the procedures for new roofs on page 13. Be sure to check the existing roof and repair any damaged areas prior to installation of the new roof system.

The following steps should be taken when installing HORIZON S roof panels over existing roofing.

- Inspect the roof for damage and make the necessary repairs.
- Secure any warped or loose roofing material.
- Make sure there are no nails or other objects protruding from the roof that might puncture the new underlayment or damage the new roof panels.
- Remove all moss and other debris from the roof.
- Cut off any overhanging roofing flush with the roof deck, and remove all hip and ridge caps.
- Follow the directions on page 13, #2 through #4, on roof preparation.

Note: For best results, HORIZON S Roofing requires a relatively smooth and flat substrate. Application over rough and/or uneven surfaces is not recommended, as this will cause oil-canning.

PANEL INSTALLATION

Note: Prior to panel installation, determine which items need to be installed prior to panels (such as vent screen, eave, valley, swept wing, etc.)

1. Install eave trim.
2. Working off the eave edge, establish a straight line up the gable edge from which you are starting. This will insure that the first panel laid will be straight and square with the eave. (See Illustration #2 – page 13)
3. Before fastening the panel to the roof deck, hem 1" of the panel 180 deg. (or allow a 1" overhang to attach an angle piece to the eave when using WEF4 alternate eave detail).
4. Once the first panel is in proper position, secure it to the roof deck with the proper fasteners along the screw flange (#10 x 1" Waferhead panel screw on 12" centers maximum.)
5. Install the gable trim and face screw it to fascia board (see page 21). This fully secures the first panel to the roof.
6. Position the second panel (overlap edge on top of the underlap edge of first panel) assuring that the eave edge is in position (1" overhang). Secure the second panel to the first panel by applying slight pressure on the overlap seam (or use rubber mallet) working from the eave toward the ridge. **The overlap edge of the panel contains factory-applied sealant to ensure weathertightness. Be sure that you achieve a positive engagement between panels.** Fasten the panel to the roof as in step #3 above.
7. Each consecutive panel will be applied as in step #3 and #5 above.

FASTENERS

Recommended fasteners for the proper installation of Horizon S panels

#10 Waferhead Screw

- Use for panel to deck or purlin attachments
- Available in 1”, 1 1/2”, and 2”
- #2 Square Drive
- Plain
- 250/bag

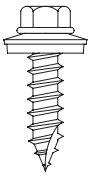

#14 WoodTite

- Use to fasten metal to plywood or OSB
- Use for trim attachment
- Available in 1”, 1 1/2”, and 2”
- 5/16” hex head, EPDM/metal washer
- Oxyseal Long-Life Coating
- Plain or Painted
- 250/bag

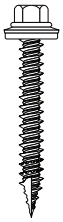

#10 WoodTite High Low

- Use with dimensional lumber
- Available in 1”, 1 1/2”, 2”, 2 1/2” and 3”
- 1/4” hex head, EPDM/metal washer
- Oxyseal Long-Life Coating
- Plain or Painted
- 250/bag

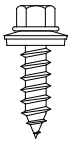

#12 x 3/4” Stitch Screw

- Used for attachment of trim to top of seam for screw flange panels
- Use with STEEL panels
- Used to stitch sidelaps for exposed fastener panels
- Used for miscellaneous metal to metal attachments
- 1/4” hex head, EPDM/metal washer
- Plain or Painted
- 250/bag

#43 Pop Rivet

- Use for attaching trim to closures
- Plain or Painted
- 250/bag

Proper Installation of Gasketed Fasteners

correctly driven | under driven | over driven

Load Table - Steel Panels

Load-Span tables for 26ga Horizon S Roofing
Allowable wind uplift loads (psf)

Substrate	Fastener	9”	12”
1/2” Plywood	#10 x 1” Wafer Head	80	60
5/8” Plywood	#10 x 1” Wafer Head	115.7	86.8
7/16” OSB	#10 x 1” Wafer Head	57.1	42.8

Horizon S Panel Profile (varies slightly by region)

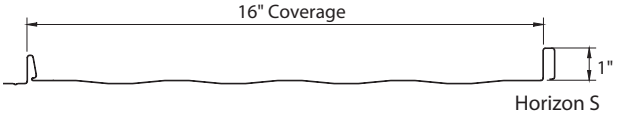

Horizon S

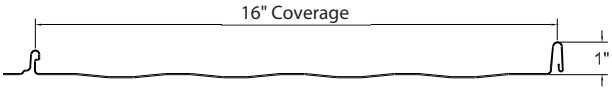

Horizon S 100

STANDARD HORIZON S

FLASHINGS & TRIMS

All flashing is 10′ 6″ in length & available in steel.

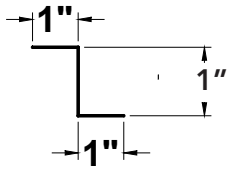

Mod WHC1
Hip Closure

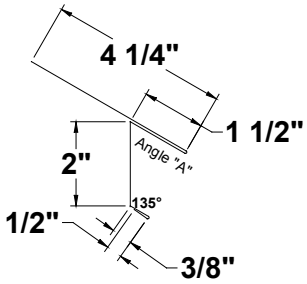

WEF1
Eave Drip
pitches up to 6:12

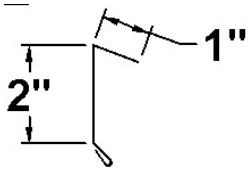

WEF2
Eave Drip
pitches over 6:12

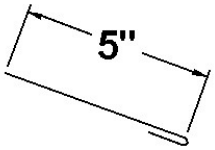

WEF3
Eave Drip

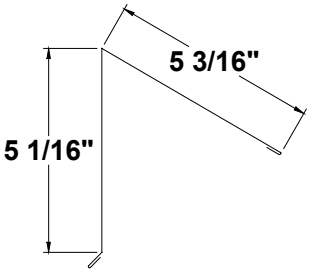

WRH4
Monoslope Ridge

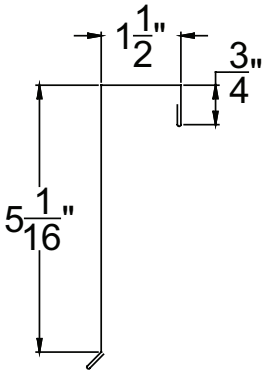

WGF4
Gable Trim

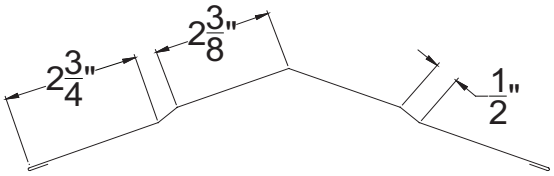

WRH3
Ridge/Peak

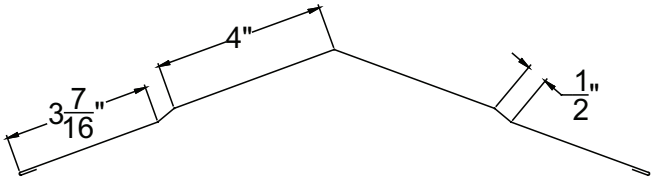

WRH5
Ridge/Peak

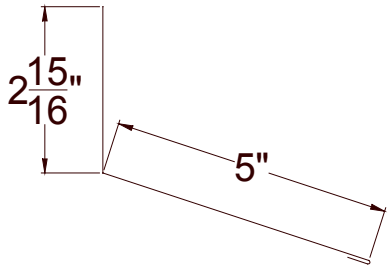

WEW2
Endwall

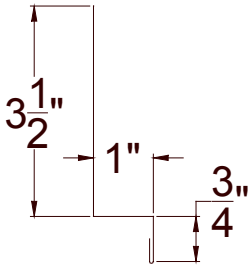

WSW4
Sidewall

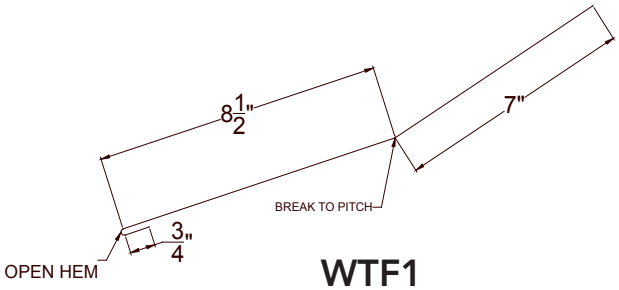

WTF1
Transition
Gambrel Mod WTF1 (bent down)

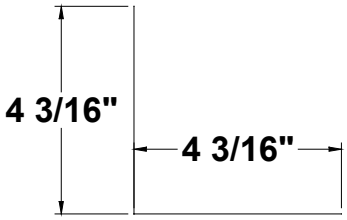

Bottom Flashing 2′ Skylight
WSCB 1 (34″) and 2 (58″)

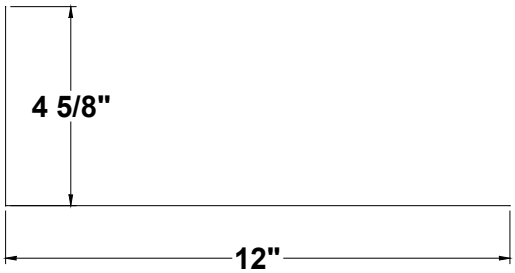

Top Flashing 2′ Skylight/Chimney
WSCB 3 (34″) and 4 (58″)

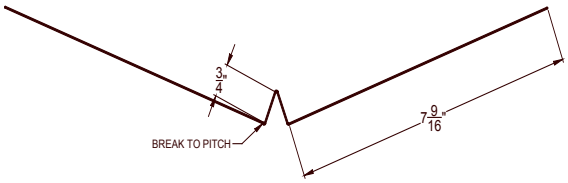

RV4
W Valley Flashing

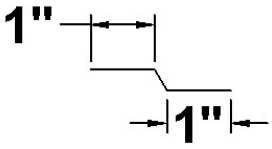

WVC1
Valley Cleat

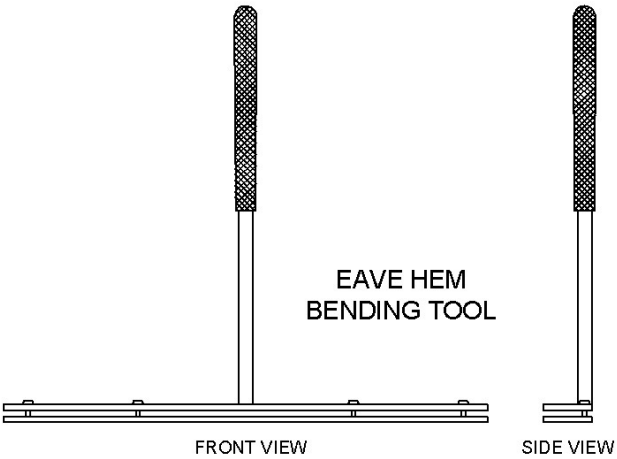

HORIZON S TRIM DETAILS

Step 1

TWO-PIECE EAVE TRIM
(Use when roof pitch is greater than 6:12)

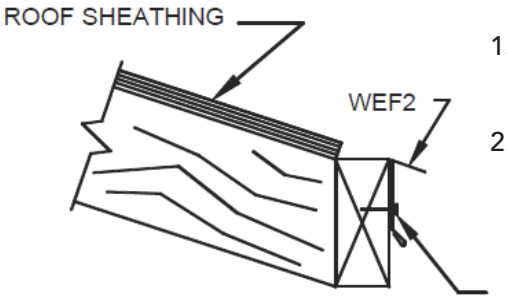

1. Line WEF2 or WEF1 top in line with plywood/purlin.
2. Screw at 12" o.c. across face of trim

#14 x 1" PAINTED

ONE-PIECE EAVE TRIM
(Use with roof pitches up to 6:12)

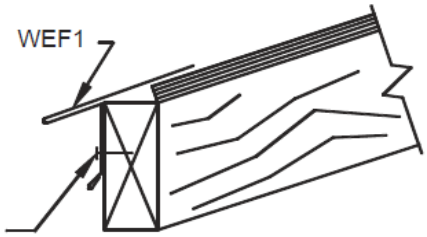

Step 2

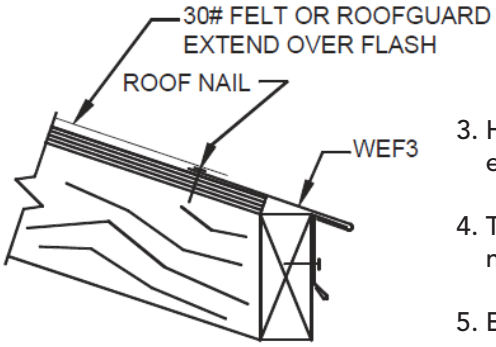

3. Hook WEF3 over hem entire length.
4. Tack in place with roofing nail.
5. Extend felt over eave trim.

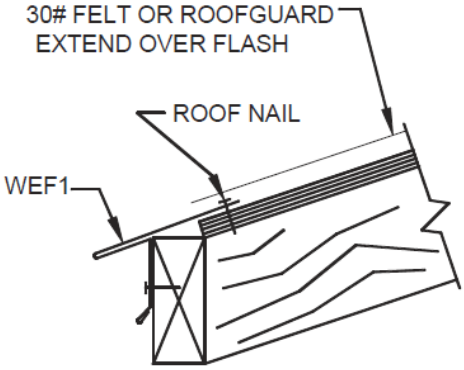

Step 3

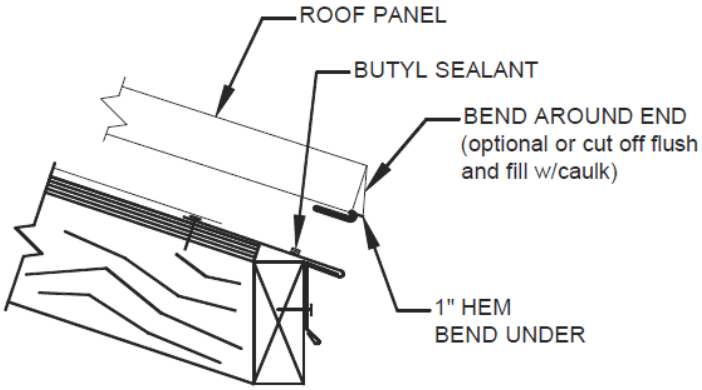

6. Mark 1" in pan of panel and cut beside each rib with a tin snips.
7. Use bending tool to bend hem under the panel.
8. Cut underlap leg off completely for 1"
9. Cut overlap leg as shown on angle Cut to produce a triangular piece to fold, closing the open rib.

Step 4

10. Caulk with One-Part Polyurethane up underlap leg.
11. Slide panel over eave hem, tight (in cold weather) or with gap (in warm weather). Snap panels together by applying pressure to the panel rib. Start at the eave and work toward the ridge.

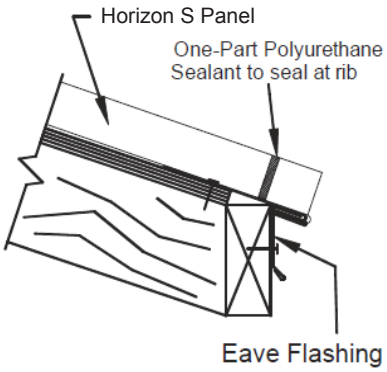

HORIZON S TRIM DETAILS

EAVE

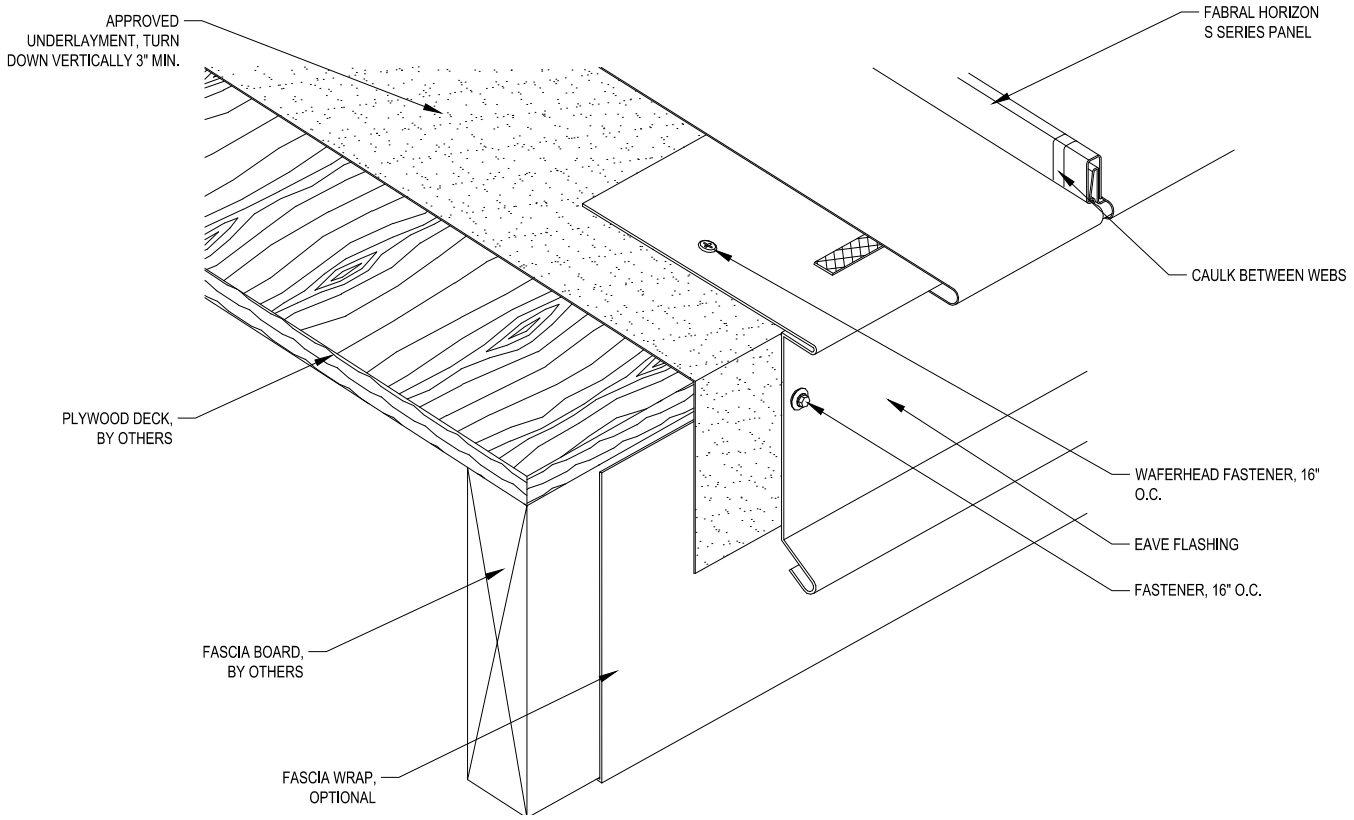

GABLE

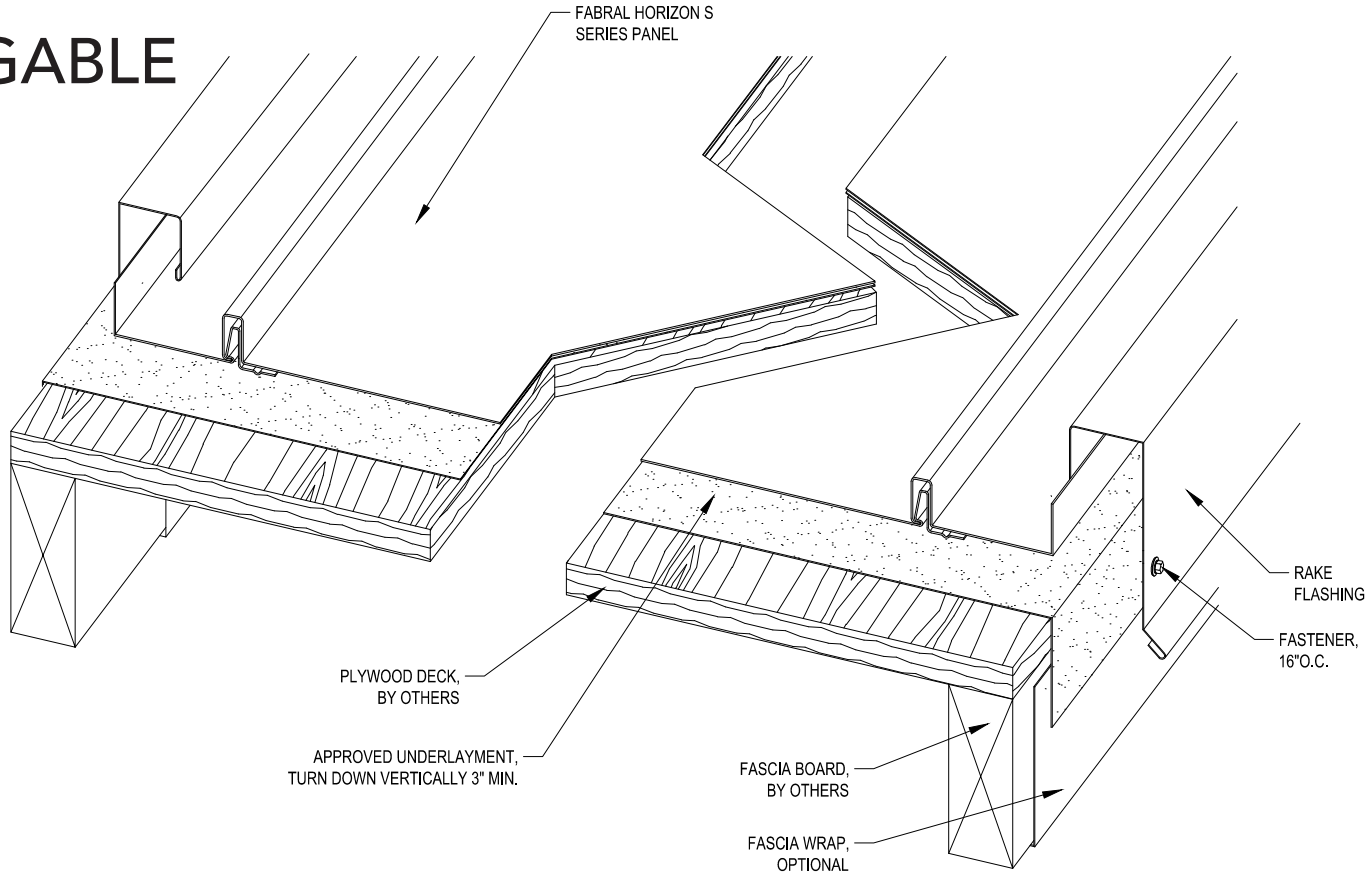

FLYING GABLE

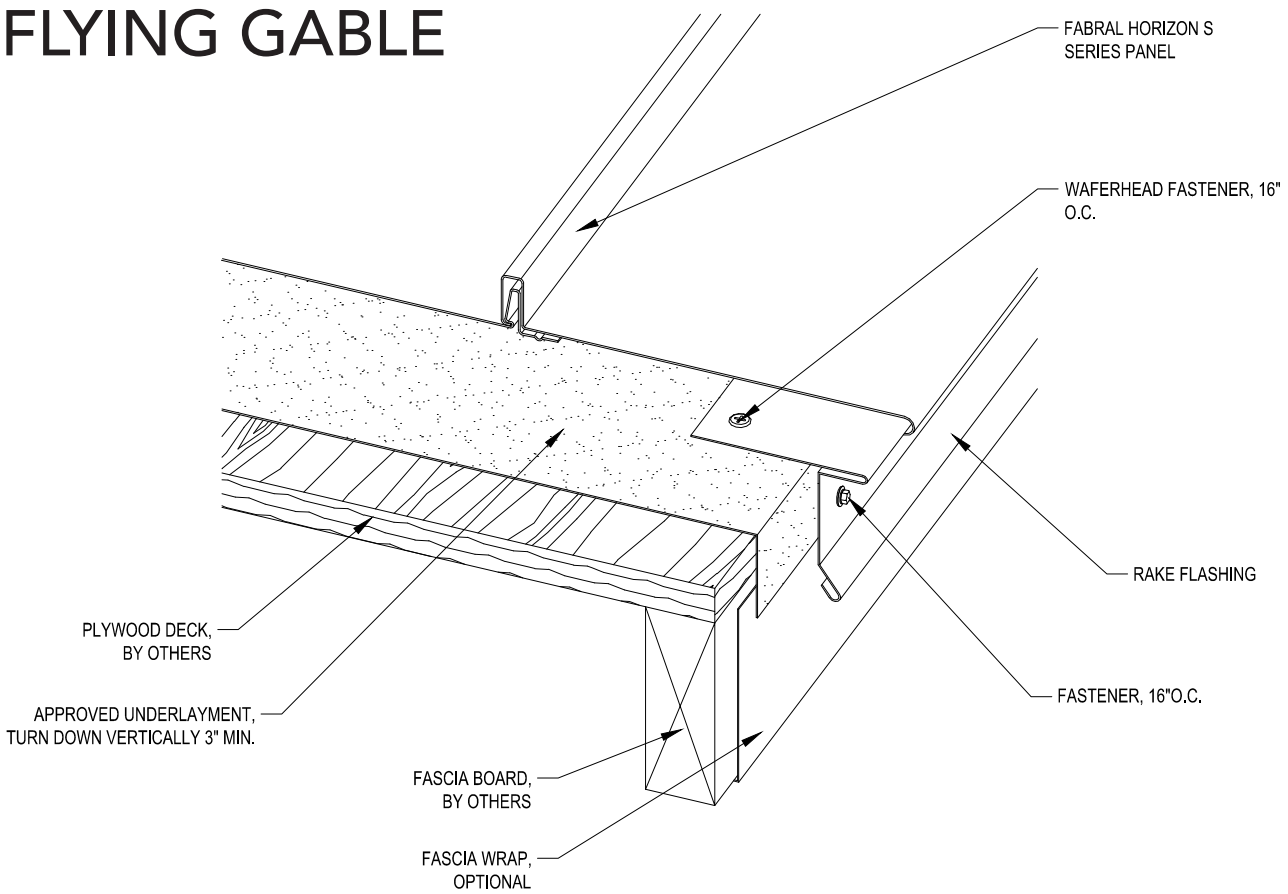

FINISHING THE GABLE

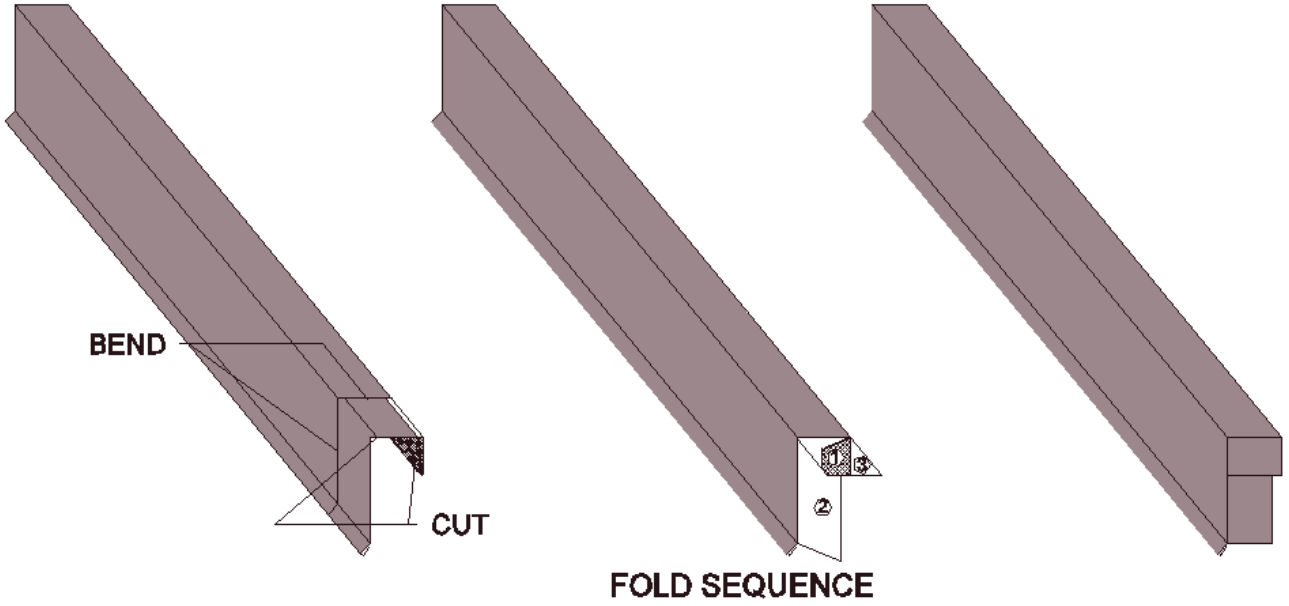

After snapping the gable flash over the cleat, pull the gable flash over the eave end fascia by 2" to 3" to finish fold. See diagram for cuts and bending locations. Always fold the sides in first and fold the top flap down last so water will run off and NOT run in.

HORIZON S TRIM DETAILS

SIDEWALL

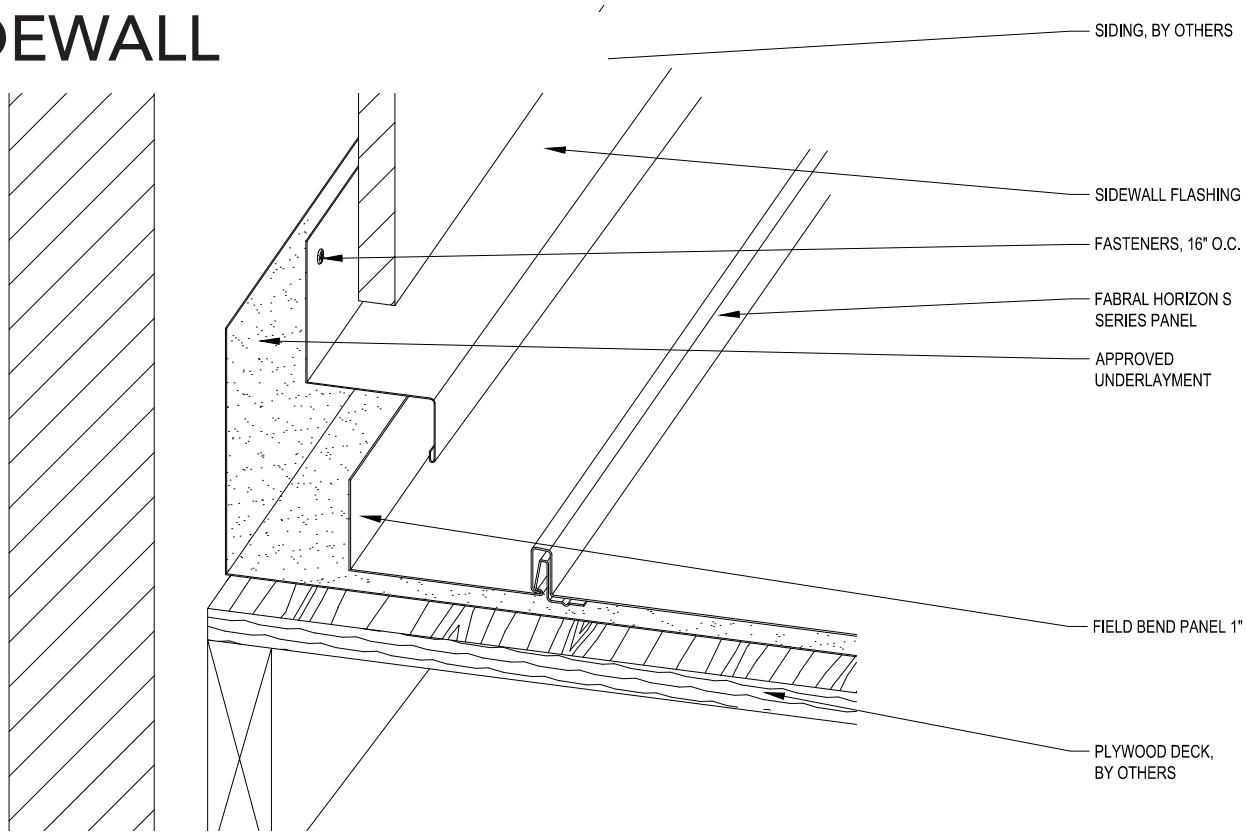

REGLET SIDEWALL

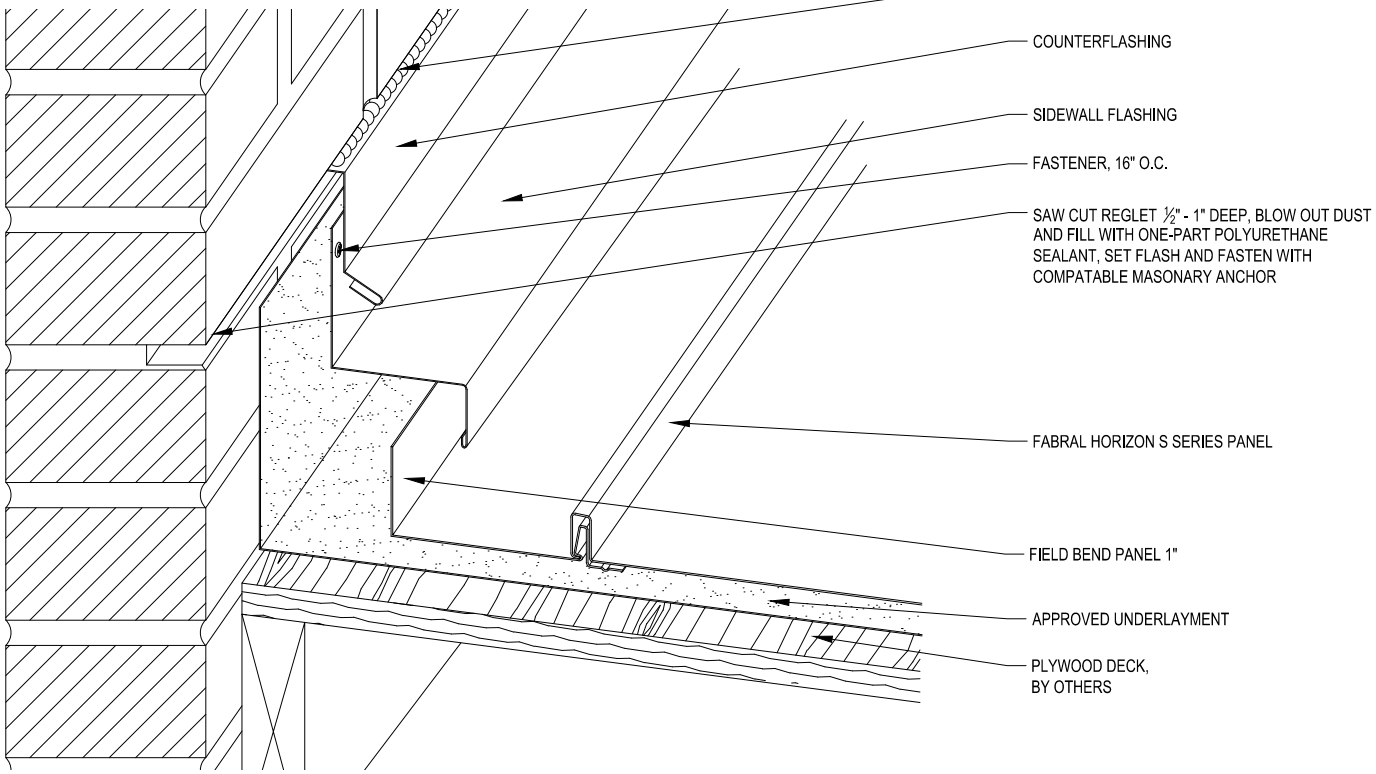

HORIZON S TRIM DETAILS

ENDWALL

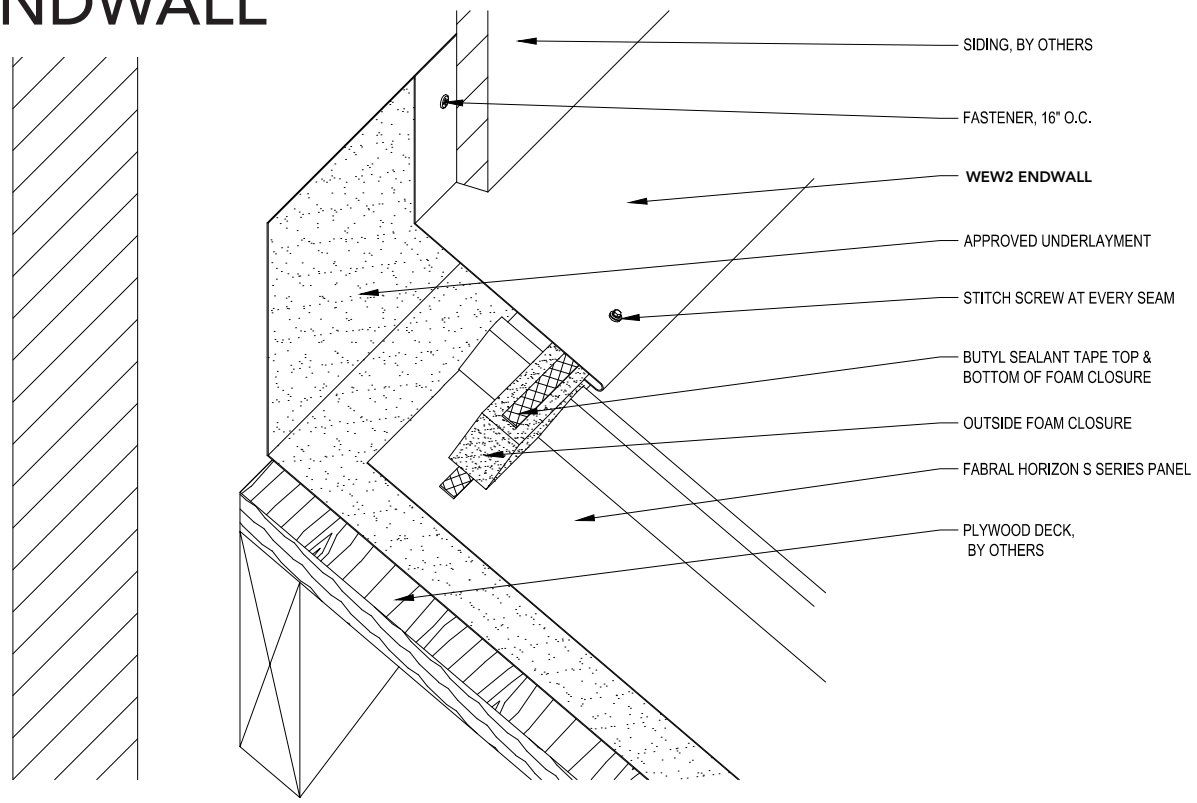

REGLET ENDWALL

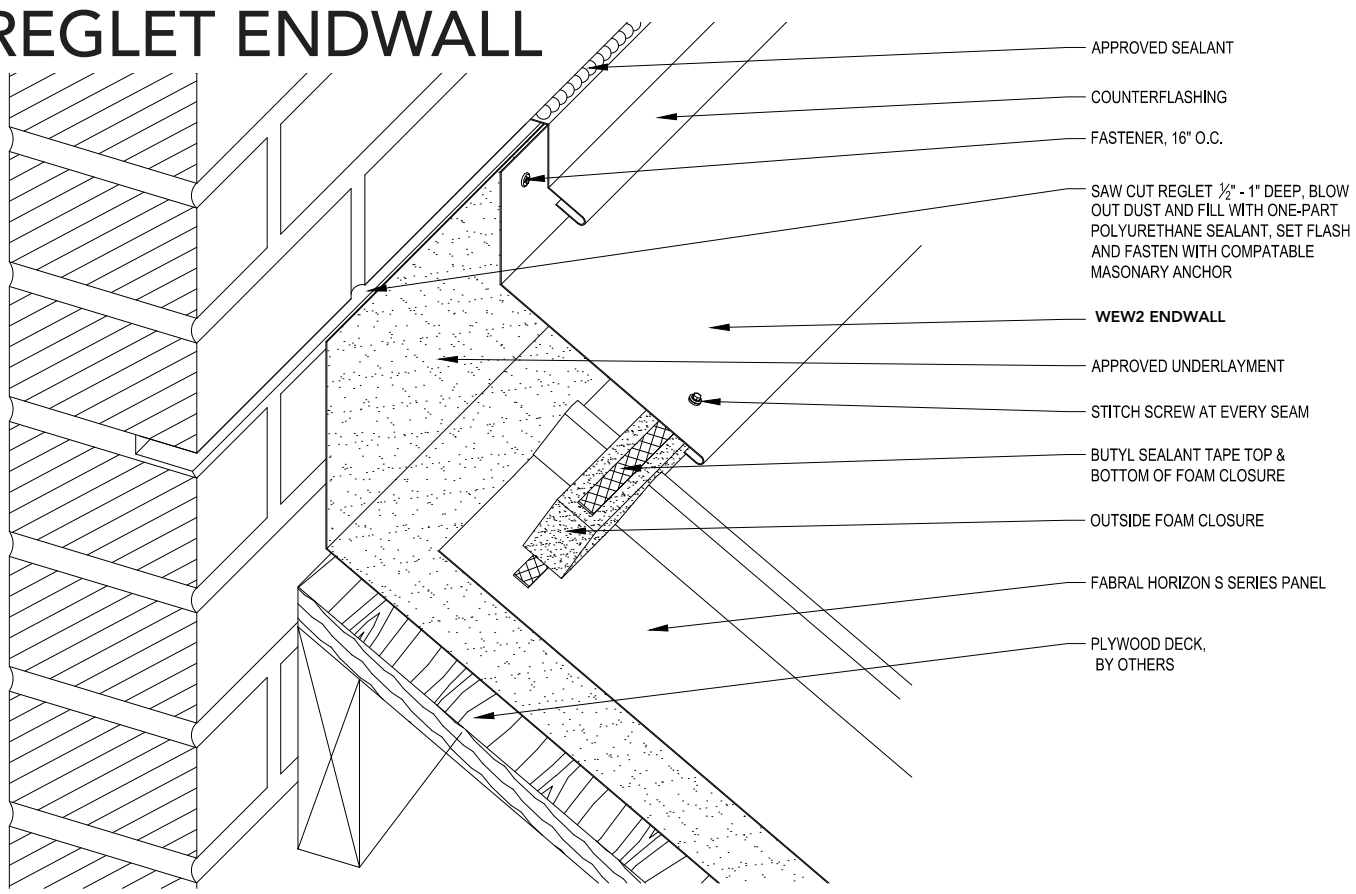

HORIZON S TRIM DETAILS

DORMER

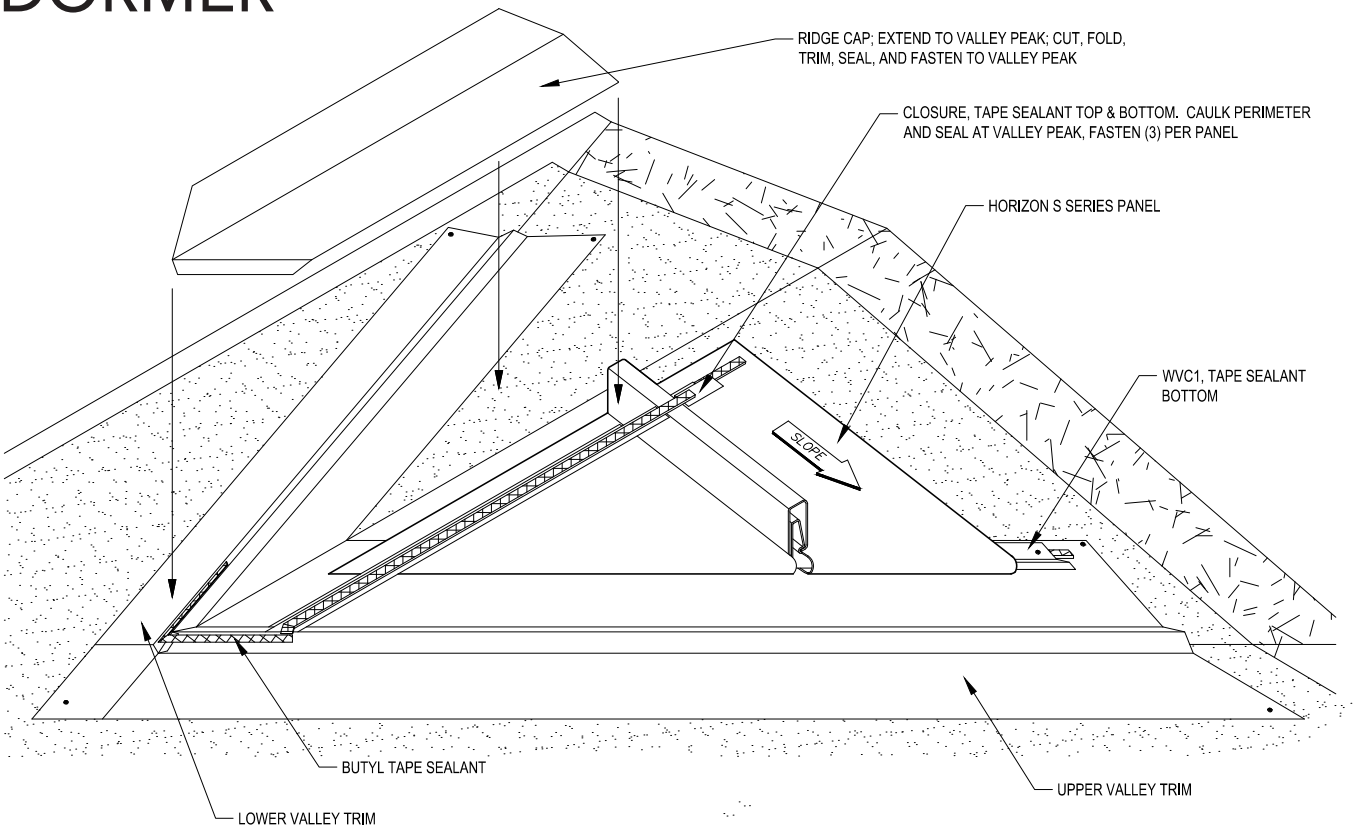

TRANSITION

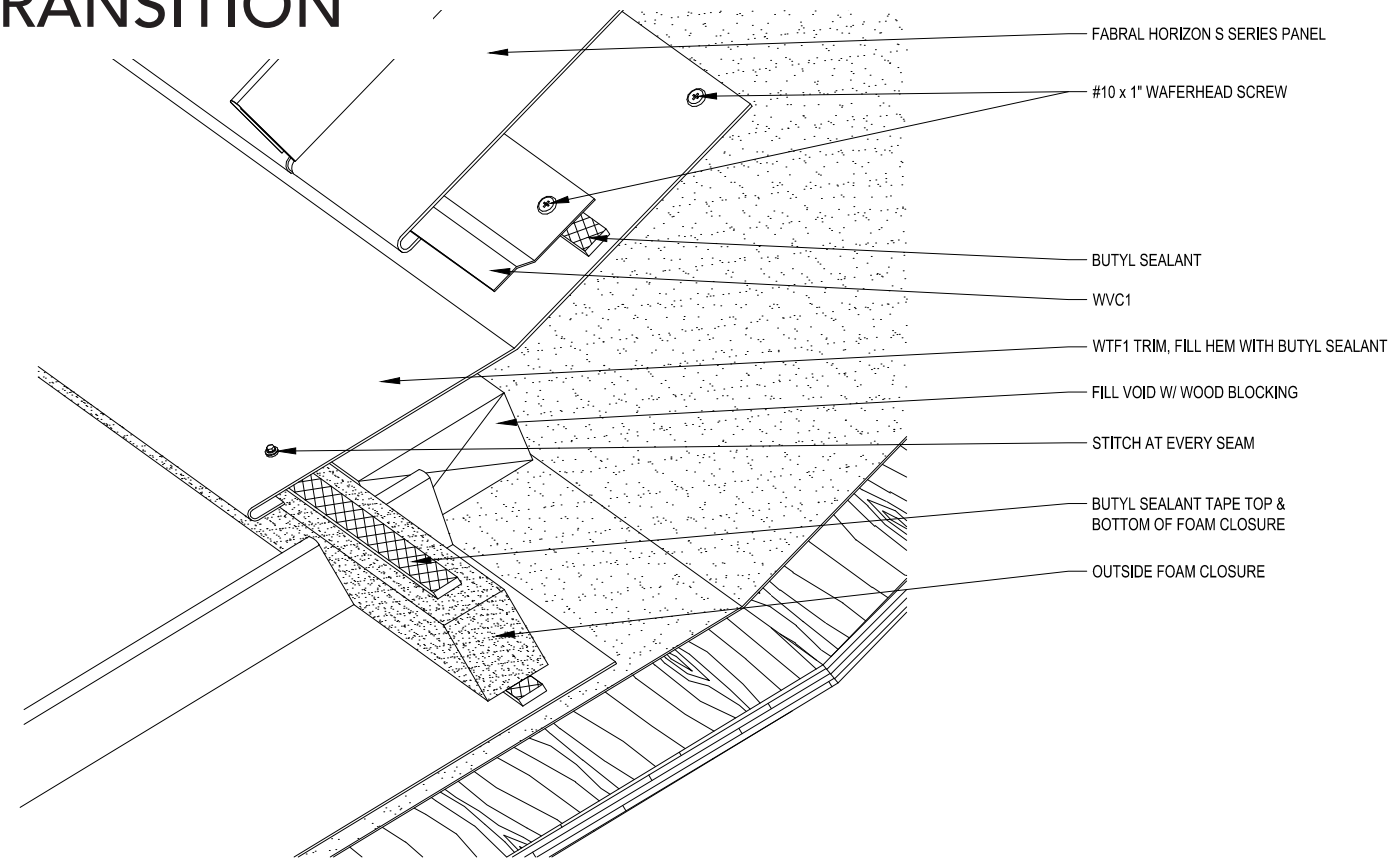

HORIZON S TRIM DETAILS

GAMBREL

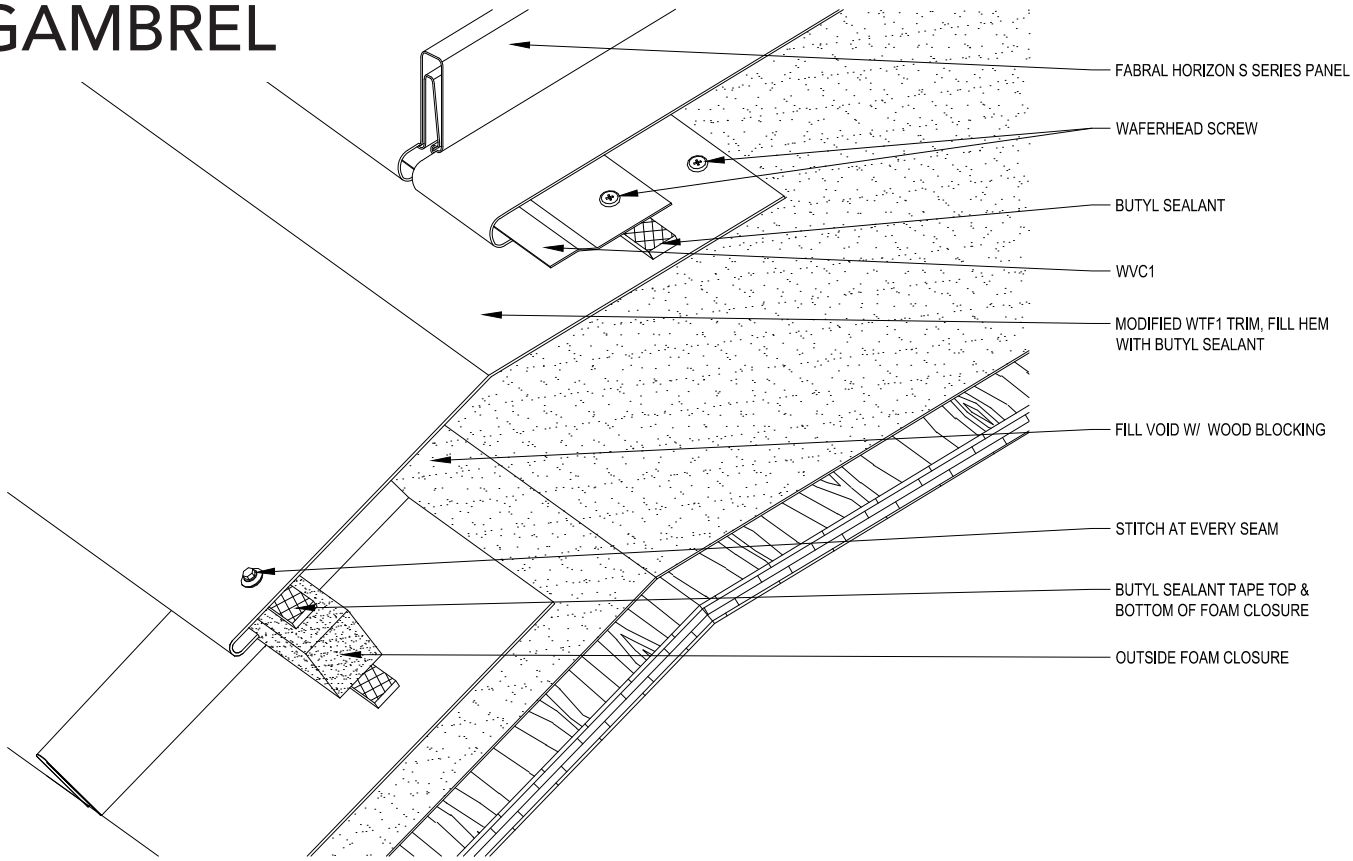

STEP DOWN DETAIL

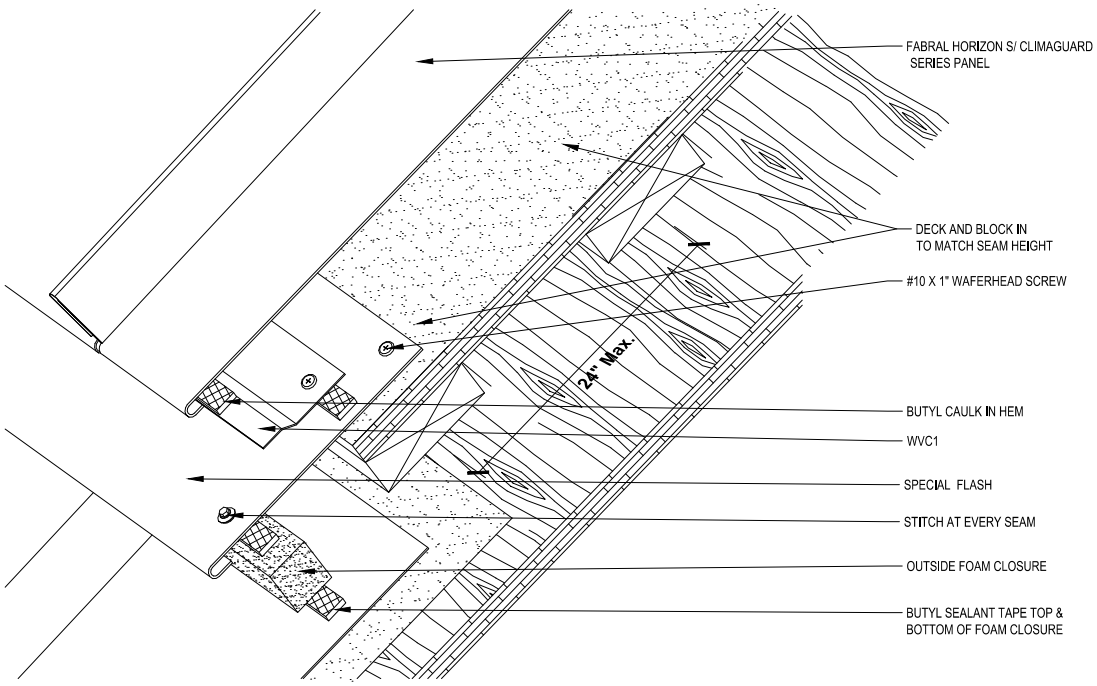

HORIZON S TRIM DETAILS

RIDGE

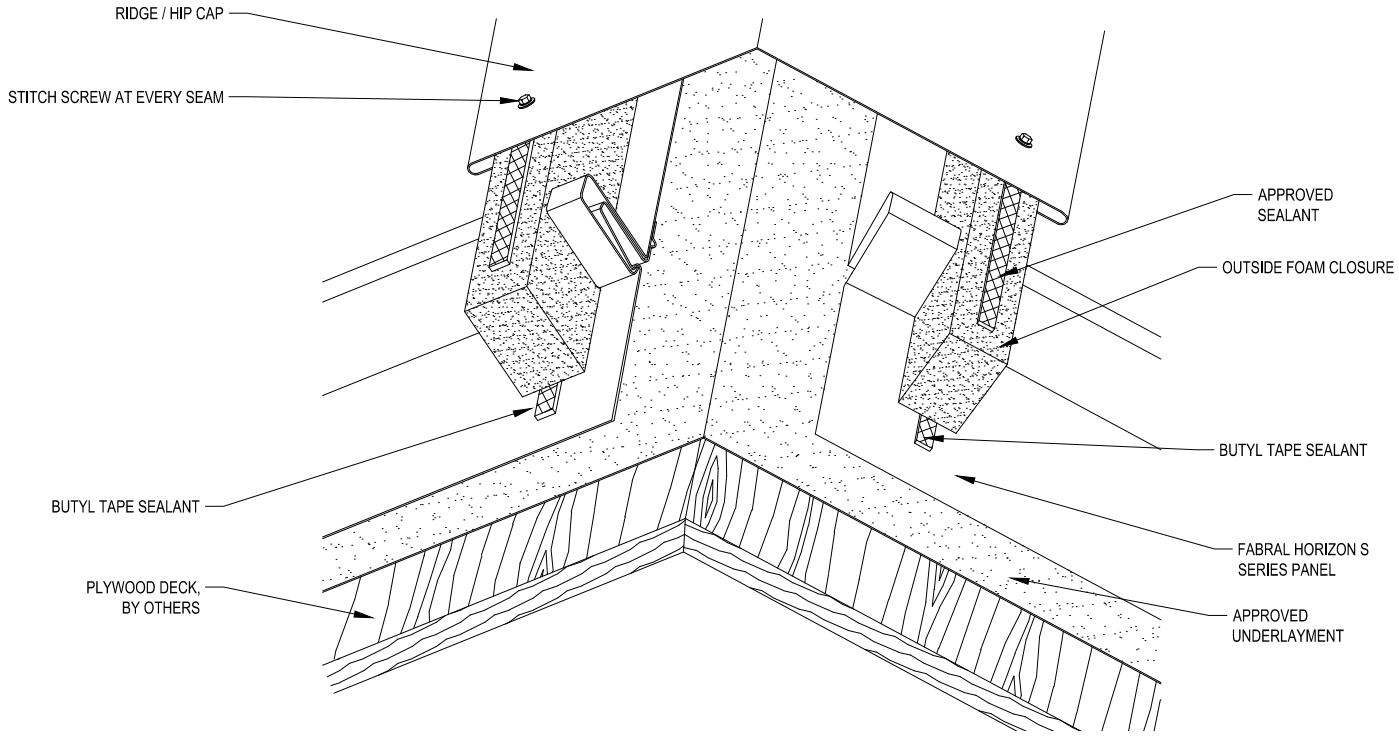

VENTED RIDGE

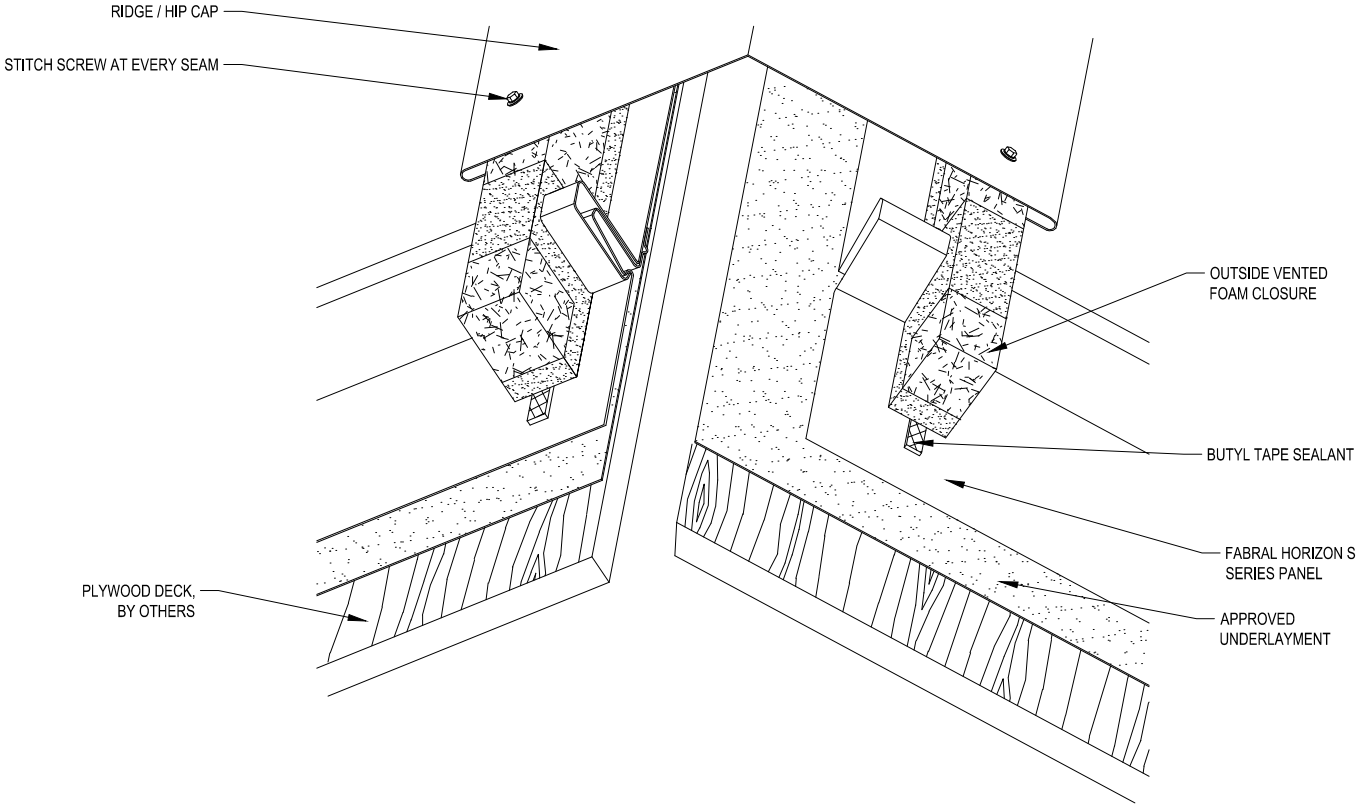

HORIZON S TRIM DETAILS

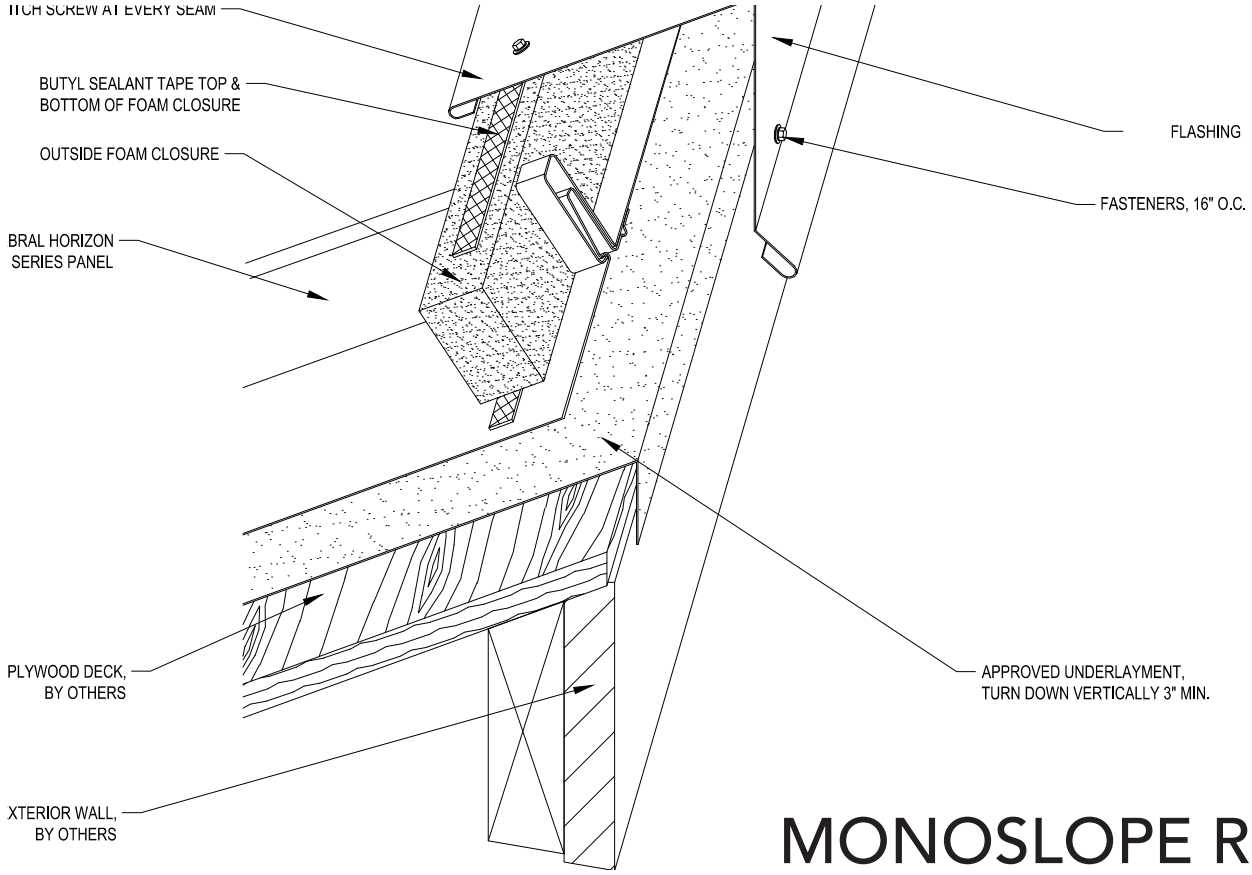

MONOSLOPE RIDGE

MONOSLOPE RIDGE WITH SIDING

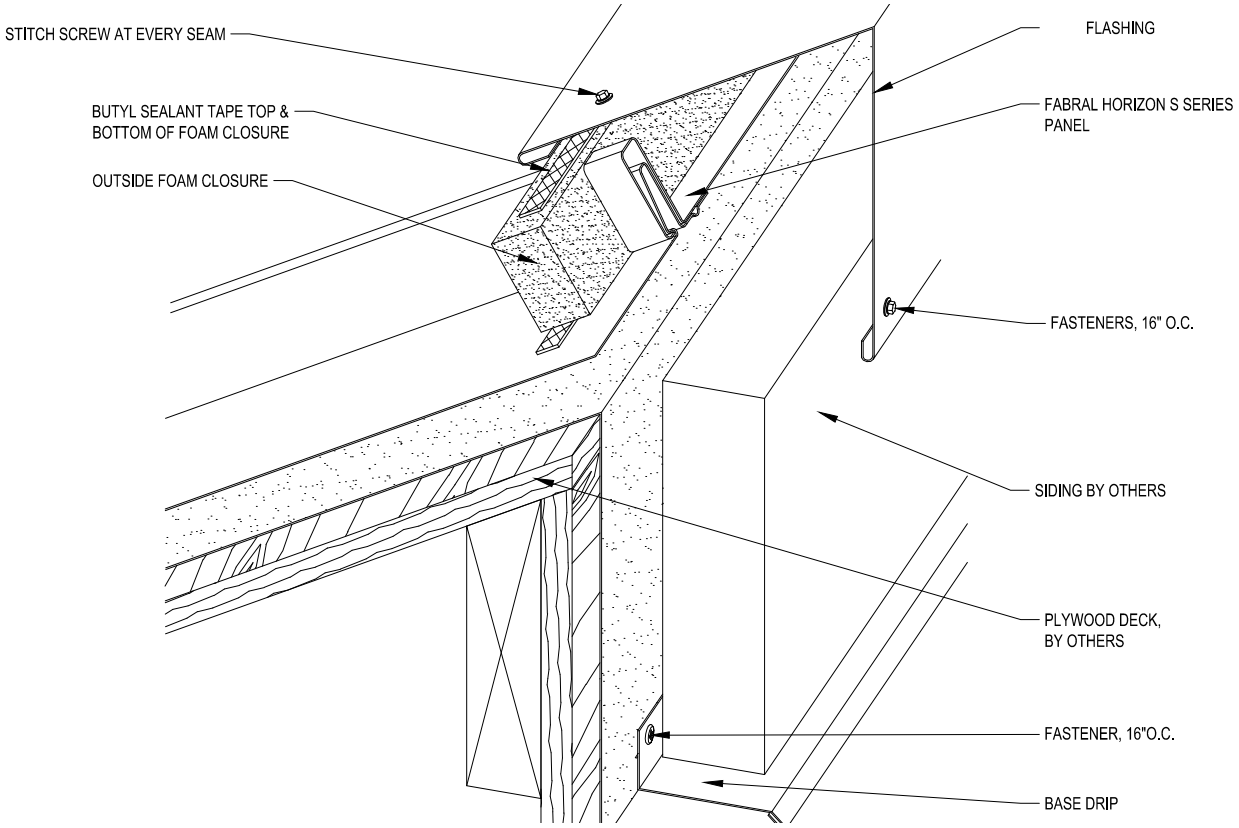

HORIZON S TRIM DETAILS

VALLEY

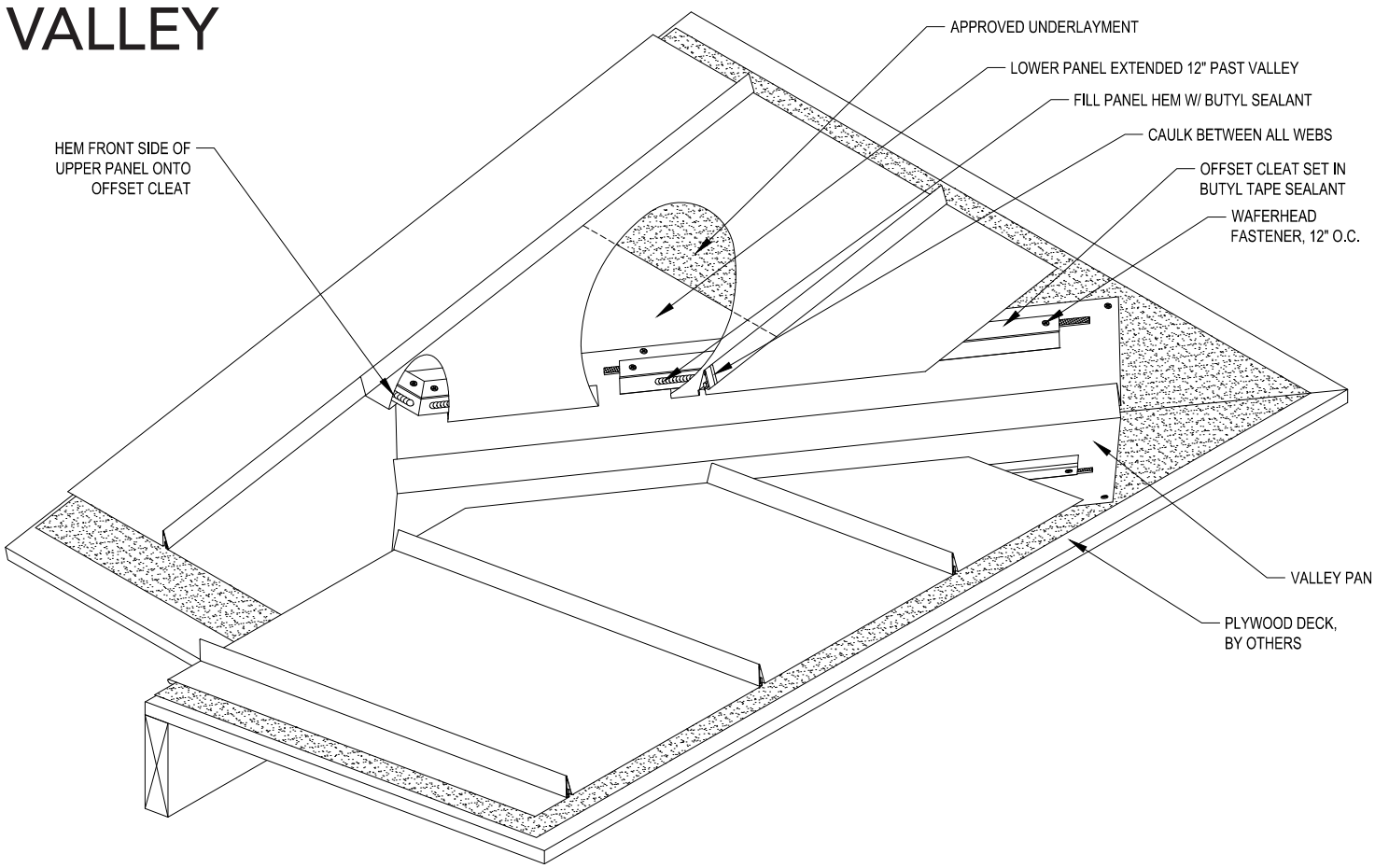

VALLEY

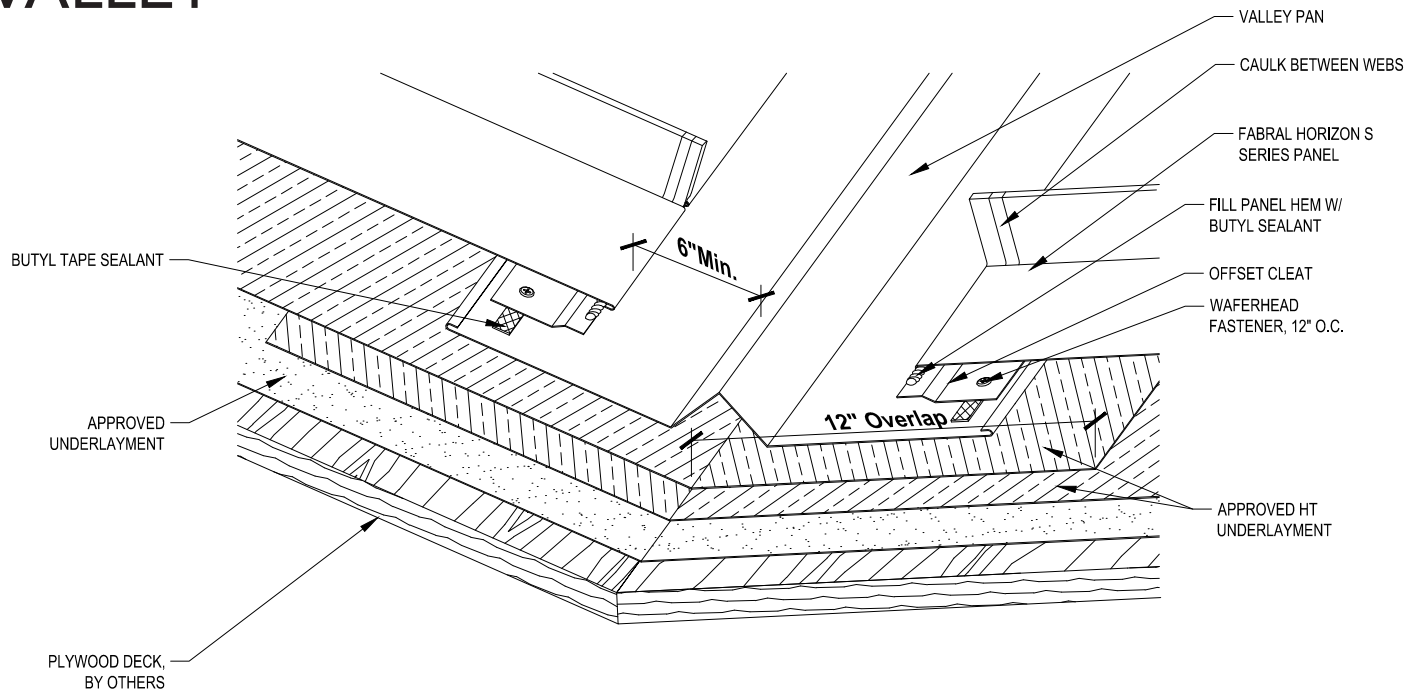

PIPE BOOT

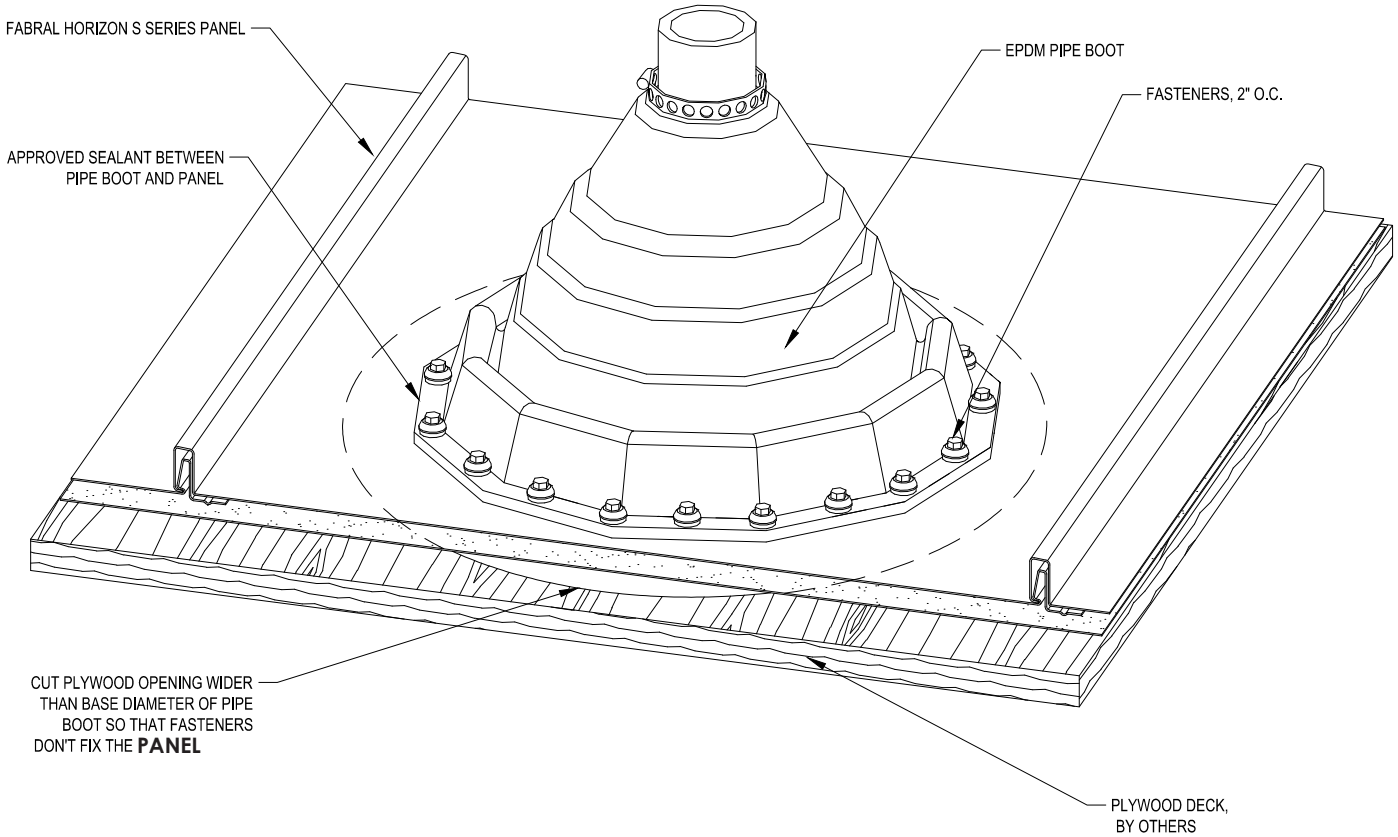
FABRAL HORIZON S SERIES PANEL
APPROVED SEALANT BETWEEN PIPE BOOT AND PANEL
EPDM PIPE BOOT
FASTENERS, 2" O.C.
CUT PLYWOOD OPENING WIDER THAN BASE DIAMETER OF PIPE BOOT SO THAT FASTENERS DON'T FIX THE **PANEL**
PLYWOOD DECK, BY OTHERS

SKYLIGHTS

PROCEDURE FOR THE INSTALLATION OF SKYLIGHT FLASHING

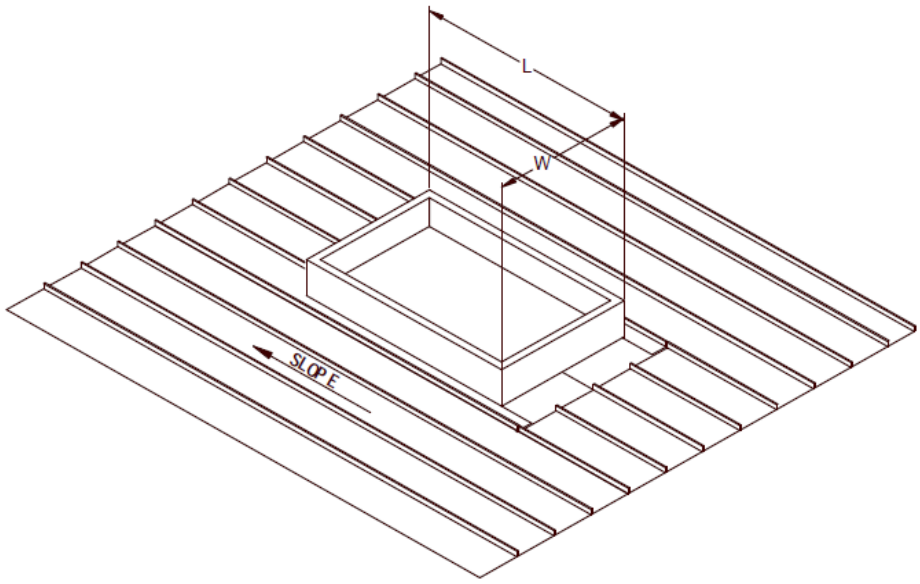

Notes:

1. Do not fasten down the panels a minimum of 24" uphill from the skylight.

2. Whenever possible, position the skylight curb so the ribs of the roof panels do not interfere with the flashing.

3. Cut the HORIZON S panels as close to the left, right and downhill sides of the curb as possible. Cut the uphill side 6" up from the curb as indicated above.

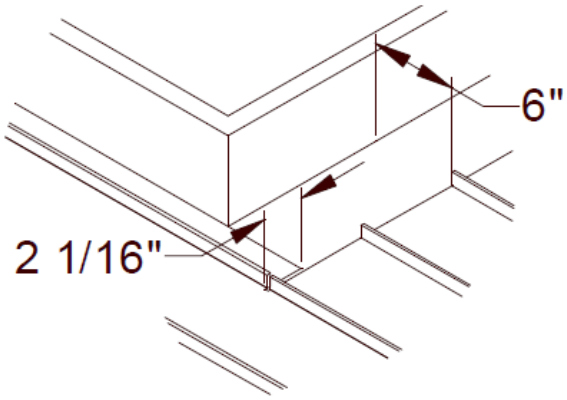

Notes:

1. The skylight flashing will be 4" wider than the width of the curb (2" on each side).

2. Cut a 1/8" slot in the two uphill corners of the HORIZON S panels, slightly wider than 2" so the uphill flashing can slide through the two slots.

Note: Contact Fabral regarding skylight details when skylight is downslope more than 10 ft. down from ridge. Applications where this is present may cause panel distortion due to thermal movement.

SKYLIGHTS CONT'D

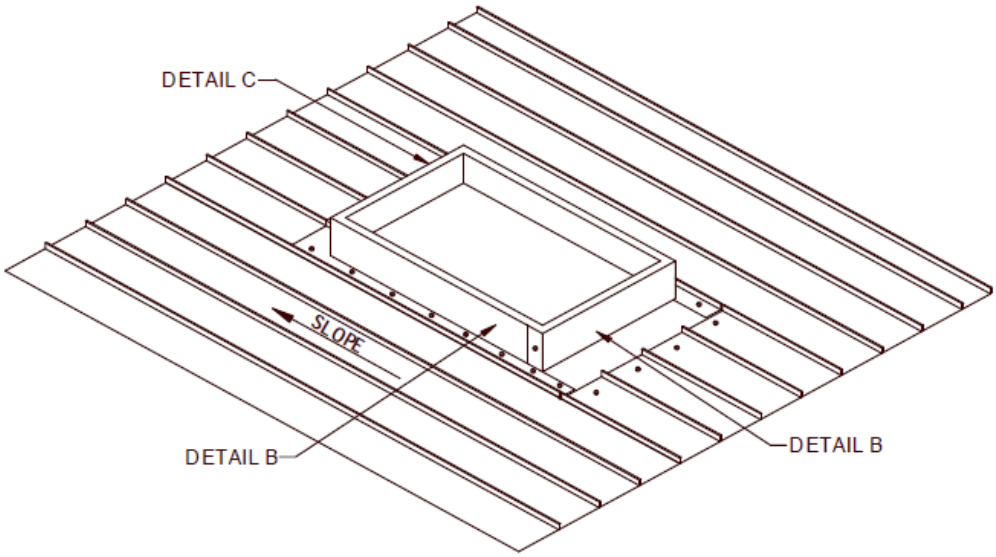

SKYLIGHT FLASHING (SIDE)

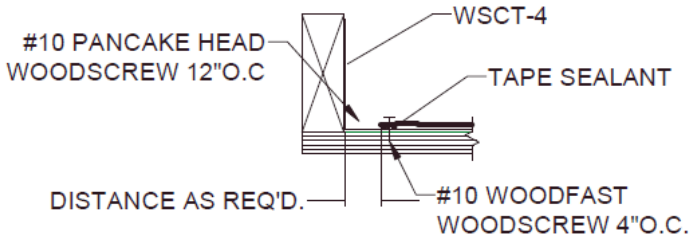

Notes:
1. In reference to details A, B, and C, refer to page 25.

SKYLIGHT TOP FLASH

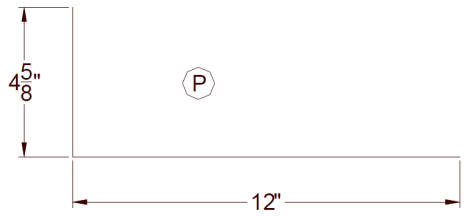

SKYLIGHT BOTTOM FLASH

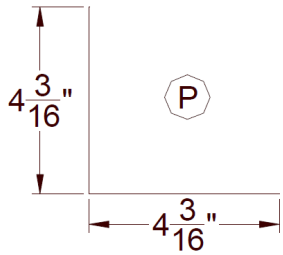

SKYLIGHT DOWNHILL

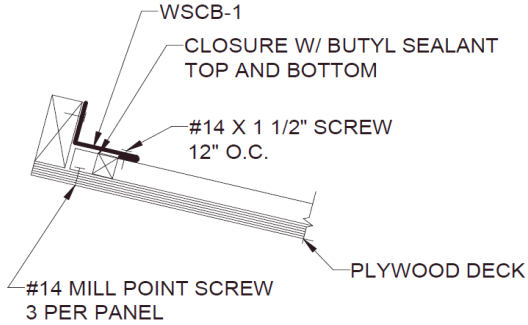

SKYLIGHTS CONT'D

SKYLIGHT FLASHING PREPARATION - DETAIL A

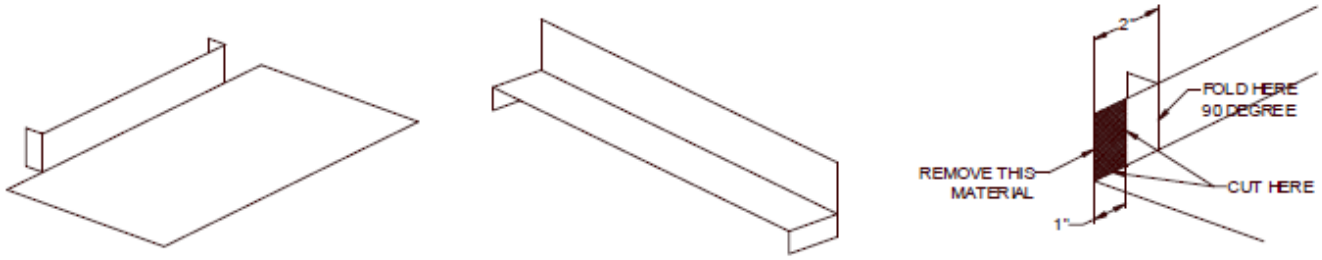

Detail C

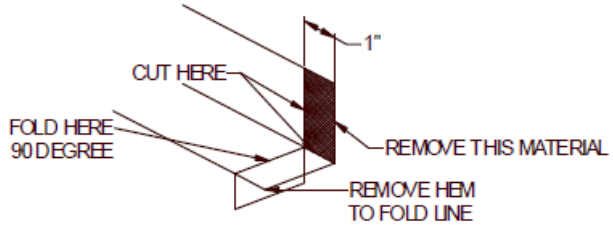

SKYLIGHT FLASHING PREPARATION - DETAIL B

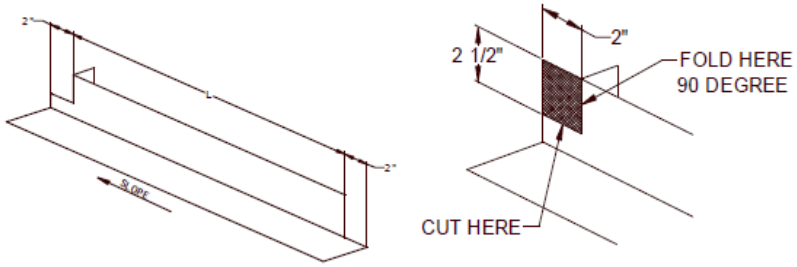

Notes:
1. Trim and bend the right side skylight flashing as indicated.

2. Trim the left side in a similar fashion. (Keep in mind the up from the downhill ends.)

Detail C

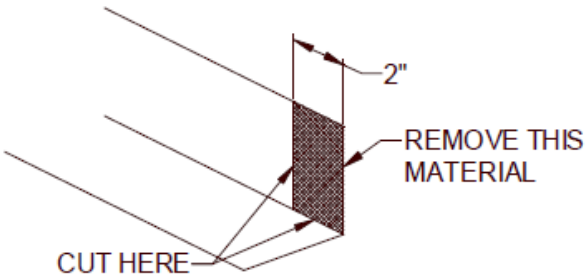

CHIMNEYS

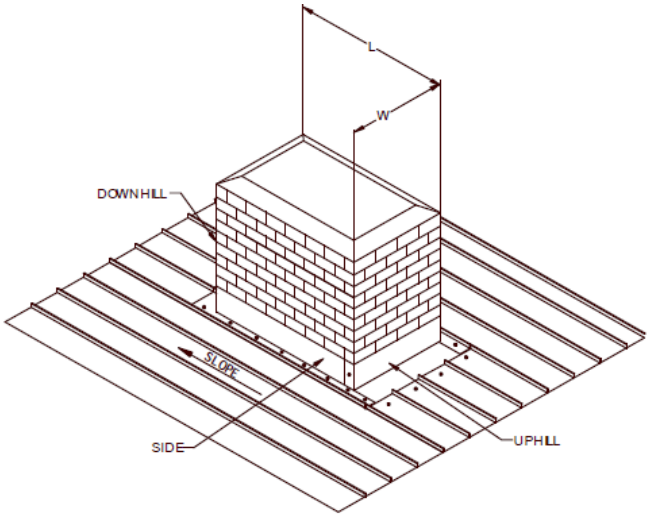

Notes:
1. Procedures for the installation of Chimney Flashings are similar to the Skylight's (refer to pages 23-25).

2. The reglet shown may be deleted if the chimney is clad with siding. Lap the siding over the flashing and caulk.

3. Be sure to specify the slope and the orientation when ordering this assembly.

Note: Contact Fabral regarding chimney details when chimney is located downslope more than 10 ft. from ridge. Applications where this is present may cause panel distortion due to thermal movement.

CHIMNEY FLASHING (SIDE)

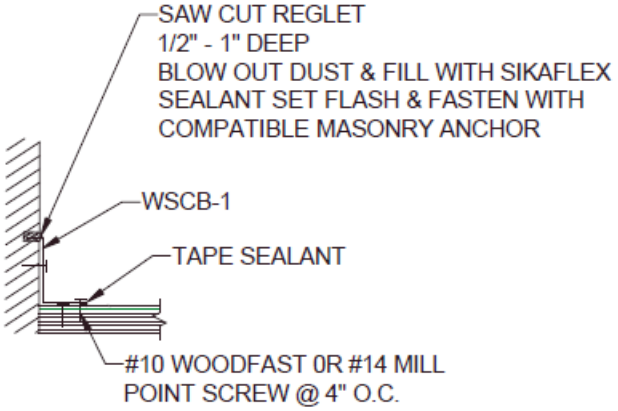

CHIMNEY FLASHING (UPHILL SIDE)

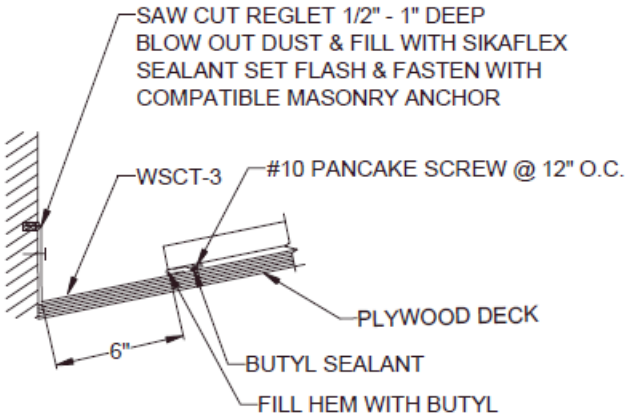

CHIMNEY FLASHING (DOWNHILL SIDE)

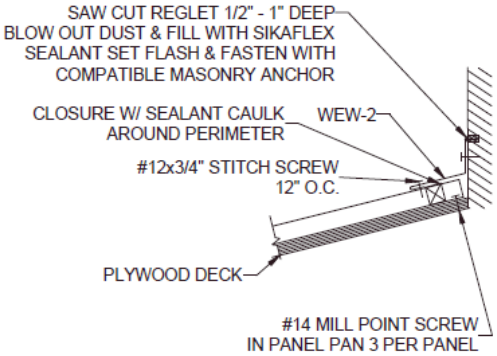

CHIMNEY (DOWNHILL)

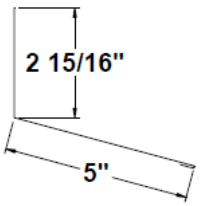

CHIMNEY (UPHILL)

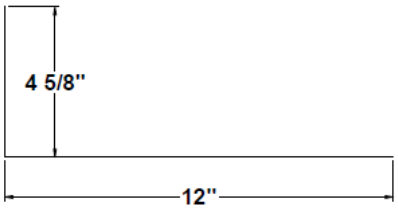

KEY TERMS

See page 16 for Illustration of Trim Conditions

Key Terms

CHIMNEY OR SKYLIGHT
See pages 23-26.

EAVE TRIM
This piece is used at the eave or gutter edge of the building, and must be installed before any panels.

ENDWALL
This piece is used when the upper end of panel butts into a vertical wall.

HIP CAP
This piece covers projecting angles formed at the intersection of the two sloping roof planes.

FASTENERS

3/4" Stitch Screw
This fastener is used to attach two pieces of metal to each other.

#14 x 1" Mill Point
This fastener is used to fasten into panel near ridge, and can also be used for secure flashings and pipe boots.

#10 x 1" Wafer Head Screw
This fastener is used to attach roofing panels to the roof deck. (Used to fasten into HORIZON S fastener strip.)

#10 x 1" WoodFast
This fastener is used to fasten flashing to fascia boards at eave or gable.

GABLE TRIM
This piece is installed on the house between the ridge and the eave, holding down the first panel edge and the last panel edge.

GAMBREL CONDITION
This trim is used to transition from a low slope on the upper roof to a steep slope on the lower roof.

MONOSLOPE RIDGE
This piece is used at the top of a single sloped roof.

RIDGE CAP
This piece is used at the peak of the roof. The ridge can be ventilated by leaving the foam closure out.

SIDEWALL
This piece is used when the roofing panel is installed parallel to a vertical wall.

SLOPE TRANSITION
This piece is used where two roofs of different pitch meet; the top section being steeper than the lower section.

W-VALLEY
Used to flash the valley formed by intersecting roof planes.

PAINT SYSTEMS & WARRANTY

Enduracote® is a paint system that takes performance to the next level. Based on cutting edge resin technology, this system offers unbeatable durability and superior long-term performance against the elements.

The Enduracote® Warranty for Galvalume® Panels

- Lifetime film integrity for walls & roofs
- 30-year against fade & chalk for walls and roofs
- 20 year non-perforation warranty

For profiles: Grandrib 3, 1 1/2" SSR, Climaguard, Mighti-Rib, Horizon S, Horizon S 100, Horizon 16, Ultra-Loc, Ultra-Rib

Product Warranties are available upon request

ENDURACOTE® PREMIUM DEFENSE Against the Elements

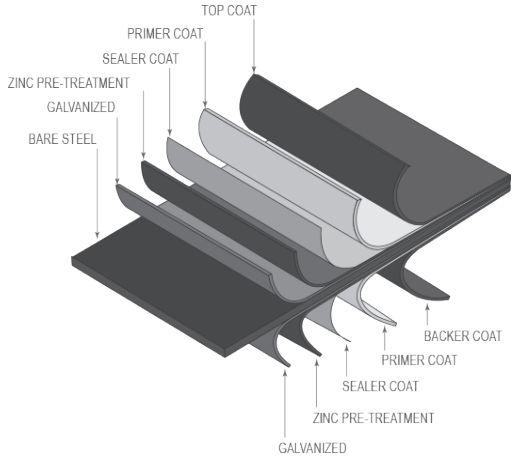

The ENERGY STAR® Program

The ENERGY STAR Program promotes highly reflective roof systems that reflect solar energy. These roof systems allow buildings to stay cooler and, in turn, use less electricity for air conditioning; less electricity means a reduction in power generation and a reduction of pollutants discharged at power plants. Fabral has attained ENERGY STAR approval for many of its Enduracote® system colors. Ask for Technical Bulletin #724 titled "ENERGY STAR Approval", for program details and a list of approved Enduracote® colors.

All Fabral Enduracote Colors are ENERGY STAR® Approved

Please contact your Fabral representative for more information about Fabral warranties and paint systems.

COMPLETE

CONTACT INFORMATION

Contact by Phone - Nationwide Plant Locations

Lancaster, PA	(800) 477-2741
Cedar City, UT	(800) 432-2725
Gridley, IL	(800) 451-3974
Marshfield, WI	(800) 528-0878
St. Joseph, MN	(800) 873-3440
Spokane, WA*	(800) 456-9124 (800) 477-8028
Tifton, GA	(800) 749-8144

Contact by Email

info@fabral.com

Fabral.com/contact

Live Tech Chat

Fabral.com

*Both numbers service Northern California, Oregon, Washington areas

GENERAL

NOTES

GENERAL

NOTES

FABRAL®

GRANDRIB 3 PLUS, GRANDRIB, MIGHTI-RIB, TRUSTIRIB, PROCLAD, HORIZON CLIMAGUARD, FABRIB, ENDURACOTE, FABRAL, FABRAL CORE are registered trademarks of Euramax International, Inc.

UL is the trademark of UL LLC

Galvalume is the trademark of BIEC International Inc.

© Fabral 2015. All rights reserved.

Fabral.com

98-32-152 - 7/15

BRIGHT & MATTE™

GLAZED CERAMIC WALL

Cove Base for Interior Restroom Walls Only

SIZES, SHADE VARIATION & PRICING

LOW
(V1)

TILE THICKNESS: 5/16"
RECOMMENDED GROUT JOINT: 1/16"
RELATIVE PRICING: Low to Medium

TRIM

SHAPE	DESCRIPTION	SIZE	PIECES/CTN	GROUP
	Sanitary Cove Base S-3619T	6 x 6	40	1■, 4

OTHER APPLICATIONS

	SUITABLE
Walls/Backsplashes	●
Countertops	●*
Pool Linings	●

* Matte finish only. Darker colors may show scratches.

Suitable for exterior applications in non-freezing climates only when proper installation methods are followed.

PERFORMANCE CHARACTERISTICS

	MOISTURE ABSORPTION	BREAKING STRENGTH	MOHS	CHEMICAL RESISTANCE
Bright & Matte	< 20.00%	120 - 230 lbs.	4.0 - 6.0	Resistant

CLEANING PROCEDURES
- Remove loose dust and dirt with a damp cloth or sponge
- Use a neutral, non-abrasive cleaner suitable for ceramic tile
- Remove cleaning solution with a clean, damp sponge or mop

INSTALLATION METHODS BACKING MATERIALS
- Concrete
- Exterior grade plywood
- Cementitious backer board

SETTING
- Latex modified thin-set
- Epoxy

GROUTING
- Unsanded grout
- Epoxy grout

✚ These items are special order (excluding colors 0025,0090, & 0091), extended lead time may be required.
✖ Not available in 0045.
★ Only available in 0049.
▲ Not available in 0037, 0038, 0039, 0040, 0041, 0064 & 0071.
■ Not available in 0009, 0044, 0050, 0062, 0065, 0067, 0078, 0081 & 0095.
● These colors are made to order and requires 6-8 weeks for delivery from date of order.
❖ These shapes are made to order and requires 6-8 weeks for delivery from date of order.

Cover photo features Bright & Matte Pomegranate in 6 x 6 and Satinbrites/Satinglo Almond in 2 x 2 on the wall.

NOTES

Since there is shade variation in all fired ceramic products, the tile and trim supplied for your particular installation may not match these samples. Final selection should be made from actual tiles and trim and not from tile and trim samples or color reproductions. Manufactured in accordance with ANSI A137.1 standards.

Water, oil, grease, etc. create slippery conditions. Floor applications with exposure to these conditions require extra caution in product selection. Not for use on ramps.

All or select items within this series are made in the USA.
For more information visit www.americanolean.com.

For additional information, refer to "Factors to Consider" at http://americanolean.com/factors-to-consider.cfm.

POST-CONSUMER RECYCLED MATERIALS

PRE-CONSUMER RECYCLED MATERIALS

MADE IN THE U.S.A.

AMERICAN OLEAN greenworks™ ENVIRONMENTAL LEADERSHIP THAT WORKS

Naturally, many of our products can help you earn LEED™ credits.

888.AOT.TILE

©2016 AMERICAN OLEAN (07/16)

AMERICAN OLEAN®
PROVEN IN TILE™

SEMI-GLOSS WALL TILE

WHITE
0100 (1)

(1), (2), (3), (4) and (5) indicate Price Groups, (1) being the least expensive.
✚ "Q" colors special order. Please allow 1-2 weeks lead time from the date of order.
★ Subject to crazing; black grout not recommended.
◆ Made to order and requires 6-8 weeks delivery from date of order.
See the Rittenhouse Square™ Collection for colors available in 3 x 6 sizes.
See the Modern Dimensions™ Collection for colors available in 4-1/4 x 8-1/2 and 4-1/4 x 12-3/4 sizes.

Data sheets to follow.

ROMTEC POLY VAULT: 1000 GALLON

The following is an example of the Romtec Poly Vault included in the design of this building.

Specifications

- Patented Design: US Patent No. 4231482
- Materials: Reinforced LLDPE – Polyethylene

	ASTM Test	Nom. Value
Density	D-488	0.938 g/cm3
Tensile strength at yield	D-638	3,000 psi
Elongation at break	D-638	> 1,000
Tensile modulus of elasticity	D-638	80,000 psi
Flexural modulus	D-790	112,000 psi
Heat deflection temp @ 66psi	D-648	144 deg. F
Vicat softening temp	D-1525	248 deg. F
Impact Strength @ -40 degrees	ARM Std.	70 ft. lb. 190 mil
Envir. stress crack resistance	D-1693	> 1,000

- Material Thickness: 3/8” average
- Mid-point Dimensions: 78” x 78”
- Volume/usage: 15,000 uses (approx)
- Weight: 450 lb
- Fittings: Cleanout: 24” dia. x 6 ½” high (cover included)
  Riser Stack: 20- 5/8” x 16-1/2” o.d. oval x 6” high
  Vent Stack: 12” o.d. x 6-1/2” high

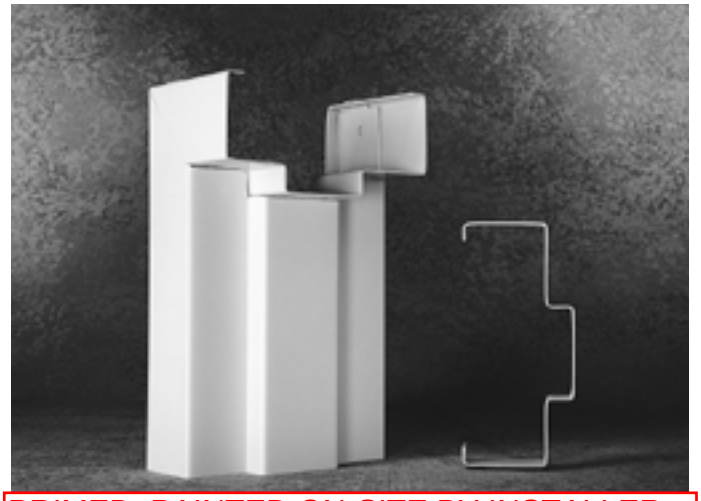

PRIMED. PAINTED ON-SITE BY INSTALLER.

About the product

F Series 3-sided flush frames are designed to meet requirements for light to maximum duty applications in both commercial and institutional buildings. They are installed in both interior and exterior locations, and in virtually all types of buildings and wall constructions. These frames are to be installed as part of the wall framing sequence. They canbe specified and supplied as KD (knock-down) for field assembly prior to installation or welded for installation asa complete unit.

Installation

1. Installation shall conform to the published Steelcraft installation instructions, ANSI A250.11-2001 (formerly SDI 105) *Recommended Erection Instructions for Steel Frames and HMMA 840.*
2. Fire Rated Assemblies must be in accordance with NFPA Pamphlet 80. The *Authority Having Jurisdiction* is the final authority in issues related to the installation and use of installed Fire Rated Doors.

Features and benefits

Steelcraft F Series flush frames offer the following unique features, which enhance long term functionality and durability:

1. **Die-mitered corner connections:** Die-mitered corner connection at the head and jamb insure an attractive, tight and closed mitered connection. The miter includes 4 corner tabs designed with concealed connection eliminating the need for continuous profile welding.
2. **Patented universal hinge preparations** allow for easy field conversion from standard weight .134″ (3.3mm) thick hinges to heavy weight .180″ (4.7mm) hinges.
3. **Adjustable base anchors** allow for installation adjustment when the floor is not level.
4. **Factory prepared** for field installed silencers.
5. **Factory applied baked on rust inhibiting primer** in accordance with ANSI A250.10-1998 (R2004).

Specification compliance

1. Overall frame construction for the Steelcraft F Series flush frames meets the requirements of ANSI A250.8-2003 (commonly referred to as SDI-100).
2. Hardware preparations and reinforcements are in accordance with ANSI A250.6-2003. Locations are in accordance with ANSI/DHI A115.

Fire ratings

The F Series flush frames meet the broadest fire rating requirements. They are listed for installations requiring compliance to both neutral pressure testing (ASTM E152 and UL 10B) and positive pressure standards (UL 10C). Refer to the **Fire Rated Section** of this manual for particular listings.

Applications

F Series frames are typically installed in wall construction types as defined in the chart below:

Frame applications

Profile	Steel thickness	Wall construction	Typical wall anchors
F16	16 Gauge [0.053″ (1.3mm)]	Wood or steel stud	Lock-in stud anchor
F16	16 Gauge [0.053″ (1.3mm)]	Masonry	Wire masonry
F16	16 Gauge [0.053″ (1.3mm)]	Existing masonry	Bolted through soffit
F14	14 Gauge [0.067″ (1.7mm)]	Wood or steel stud	Lock-in stud anchor
F14	14 Gauge [0.067″ (1.7mm)]	Masonry	Wire masonry
F14	14 Gauge [0.067″ (1.7mm)]	Existing masonry	Bolted through soffit
F12	12 Gauge [0.093″ (2.3mm)]	Wood or steel stud	Lock-in stud anchor
F12	12 Gauge [0.093″ (2.3mm)]	Masonry	Wire masonry
F12	12 Gauge [0.093″ (2.3mm)]	Existing masonry	Bolted through soffit

F Series

STEELCRAFT

Elevation

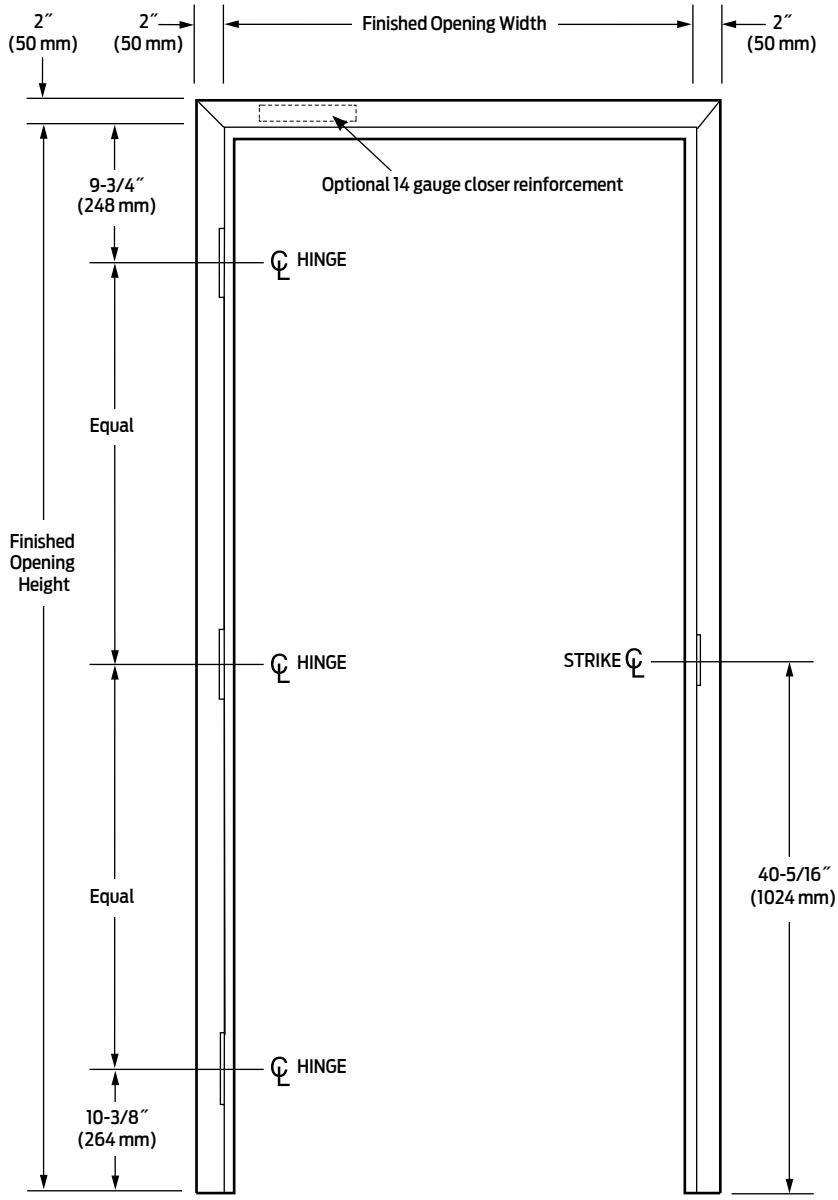

Standard Double Rabbet Frame

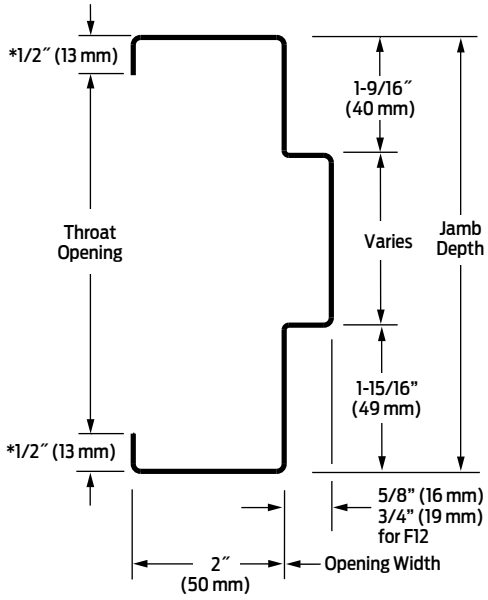

Single Rabbet Frame

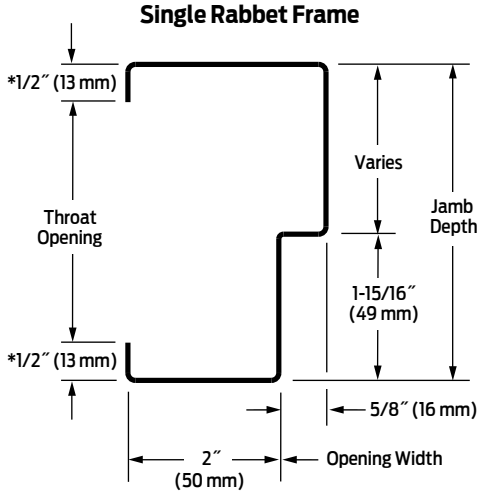

* 7/16″ (11mm) on 5-3/4″ frame depth

Frame sizing options

Series	Maximum opening size		Jamb depth availability (profile)				Standard profile dimensions (variations available)			Corners
	Single	Pair	Single rabbet		Double rabbet		Face	Stop	Return	Standard
			Minimum	Maximum	Minimum	Maximum				
F16 F14	5´0″ x 11´0″(1524mm x 3353mm)	10´0″ x 11´0″(2439mm x 3353mm)	3″ (76mm)	20″ (508mm)	4-1/2″ (114mm)	20″ (508mm)	2″ (50mm)	5/8″ (16mm)	1/2″* (13mm)	DIE MITERED with four (4) concealed tabs interlocking head and jambs
F12	4´0″ x 8´0″(1 219mm x 2438mm)	8´0″ x 8´0″(2438mm x 2438mm)	N/A	N/A	4-3/4″ (121mm)	14-3/4″ (375mm)	2″ (50mm)	3/4″ (19mm)	1/2″ (13mm)	Square cut for welded corners

* Except 5-3/4″ (146mm) depth, which is 7/16″ (11mm) N/A - Not Available12 gauge standard profile is equal rabbet

Universal Mortise Hinge Prep

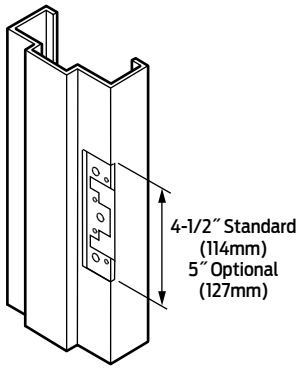

7 Gauge Hinge Reinforcement

4-7/8″ Strike Prep (ASA)

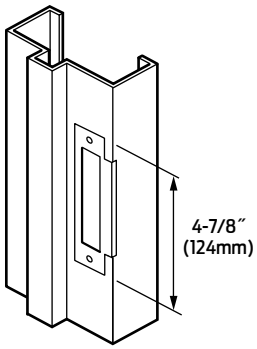

KD Corner Detail

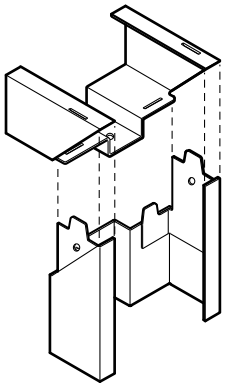

Welded Corner

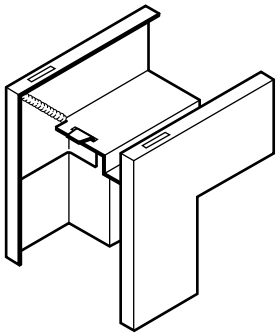

General notes

1. Variations in jamb depths available in 1/8″ (3mm) increments.
2. All F Series frames are supplied standard with masonry wire or lock-in jamb anchors and adjustable base anchors. Anchors are designed for maximum wall/frame engagement and installation flexibility.
3. F Series frames are to be installed as part of the wall framing sequence.
4. Depending on environmental and usage conditions the steel can be either cold rolled or galvannealed. Galvannealed steel is recommended for all exterior applications.
5. 12 gauge flush frames, F12, are standard equal rabbet profiles with 3/4″ stops.
6. For KD Corner and optional 4″ Head, tabs in rabbeted area should be bent outward, not inward, during assembly (as shown).
7. F Series frames with 4″ heads are mainly used in masonry applications when 2″ face heads do not match course blocking.

Optional 4″ (102mm) Face Head Detail

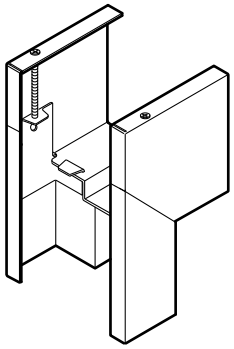

Frame options

Series	Frame profile		Corner connections				4″ (102mm) heads
			KD (Knock-down)		**SUA** (Set-up & weld)		
	Single rabbet	**Double rabbet**	**Single rabbet**	**Double rabbet**	**Single rabbet**	**Double rabbet**	
F16	Typically for walls less than 3-3/4″ (95mm) thick. Minimum walls thickness 2″ (51mm)	Typically for walls less than 3-3/4″ (95mm) thickness or greater	3 interlocking corner tabs per factory die-miter. See the ″KD Corner Detail	4 interlocking corner tabs per factory die-miter. See the ″KD Corner Detail	Available when specified, and in accordance with ANSI A250.8-2003 (SDI 100).		Die-mitered for use with 2″ (51mm) face double rabbet jambs. Available when specified for KD or SUA applications.
F14							
F12	N/A		N/A	N/A	Standard Saw Cut and welded, and in accordance with ANSI A250.8-2003 (SDI 100)		For use with 2″ (51mm) face double rabbet jambs.

N/A - Not Available

Wire Masonry Anchor

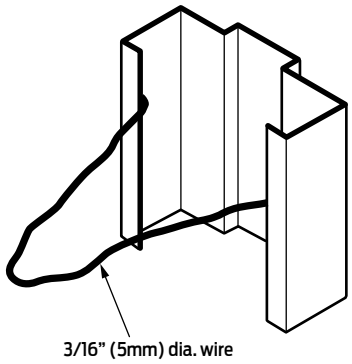

Existing Wall Anchor

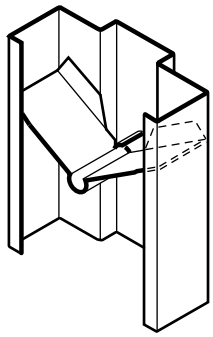

Adjustable Base Anchor

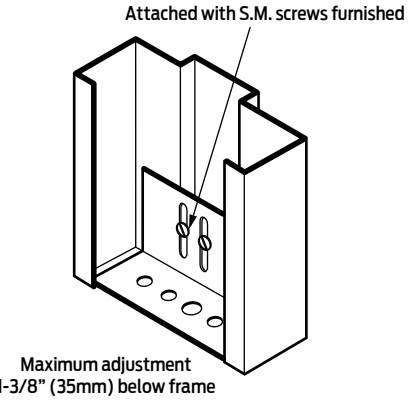

Anchor for Wood Stud Partition

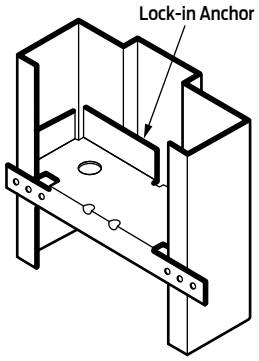

Anchoring and installation notes

1. **F16 and F14 Series commercial and Institutional frames** are supplied standard with masonry wire or lock-in jamb anchors and adjustable base anchors. Anchors are designed for maximum wall/frame engagement and installation flexibility.
2. **For anchoring applications, refer to the Frames: Anchoring systems section of this manual.**
3. **Installation Caution Notice: Grouted frames:**
   - When temperature conditions necessitate an additive to be used in the mortar to prevent freezing, the contractor installing the frames must coat the inside of frames in the field with a corrosion resistant coating per SDI 105.
   - When frames are to be grouted full, silencers must be field installed prior to grouting.
   - Steel frames, including fire rated frames, do not require grouting. Grouting is not recommended for frames in drywall.
4. All fire rated frames must be installed in accordance with NFPA Pamphlet 80 and the *Authority Having Jurisdiction.*

Framing applications

Series	Steel type	Building type	Opening	Usage frequency[1]	KD[4] Corner	SUA[5] Corner	Applications
F16	Non-Galvannealed[2]	Institutional and Commercial	**Interior**	**Heavy to extraheavy duty**	✓	✓	**Typical building conditions**
	Galvannealed[3]		**Mainly Exterior**				**High humidity and/or weather exposure**
F14	Non-Galvannealed[2]	Institutional and Commercial	**Interior**	**Extra heavy tomaximum duty**	✓	✓	**Typical building conditions**
	Galvannealed[3]		**Mainly Exterior**				**High humidity and/or weather exposure**
F12	Galvannealed[3]	Institutional and Commercial	**Interior and exterior**	**Maximum duty**	**N/A**	✓	**Maximum traffic building conditions**
							High humidity and/or weather exposure

1 Usage frequency is based on ANSI A250.8-2003
2 Commercial quality cold rolled steel
3 Reinforcements for galvannealed frames are also galvannealed
4 Knock-Down for field assembly prior to installation
5 Set-up and Welded for installation as a pre-welded unit

American Laminators
PO Box 297, Drain, OR 97435
(541) 836-2191

HANDLING AND STORAGE INSTRUCTIONS FOR FiRP® GLULAM BEAMS

TRANSIT DAMAGE

TRUCK – When material is delivered by truck, damages should be acknowledged in writing to the driver.

RAIL - If material has been damaged on transit, do not unload until the inspector for the delivering carrier has been contacted and acknowledges the damage and presents you, the consignee, with a written inspectors report. It is the responsibility of the consignee to file damage claims against the carriers.

ERECTION AND INSTALLATION

A competent erector shall erect the timber systems with appropriate resources for the erection of this system. The erector shall properly brace system and maintain member alignments until all necessary components are in place. Bracing system design and implementation are the responsibility of the erector.

Minor installation corrections: trimming, moderate reaming or drilling, and use of drift pins shall be considered a usual expense of erection. American Laminators / Duco-Lam shall be notified immediately at the discovery of any error in materials, workmanship, or shop drawings. No correction shall be attempted without approval from American Laminators / Duco-Lam.

Limiting exposure to moisture during jobsite storage and erection can minimize seasoning checks. Avoiding rapid changes in wood moisture levels during construction and building operation can further minimize checking. Temperature and humidity should be regulated to provide gradual seasoning of members during the first year of operation. Longer if timbers are of large volume, or have been exposed to unusual wetting during construction.

- over -

TABLE 1

DESIGN VALUES FOR STRUCTURAL GLUED-LAMINATED SOFTWOOD TIMBER STRESSED PRIMARILY IN BENDING[1,2,3]

			Bending About X-X Axis (Loaded Perpendicular to Wide Faces of Laminations)					
			Extreme Fiber in Bending[6]		Compression Perpendicular to Grain		Shear Parallel to Grain (Horizontal)[7]	Modulus of Elasticity[8]
			Tension Zone Stressed in Tension	Compression Zone Stressed in Tension	Tension Face	Compression Face		
Combination Symbol	Species[4] Outer/Core	Balanced/ Unbalanced[5]	F_{bx}^{+} (psi)	F_{bx}^{-} (psi)	$F_{c\perp x}$ (psi)		F_{vx} (psi)	E_x (10^6 psi)
1	2	3	4	5	6	7	8	9
Western Species								
EWS 24F-V4	DF/DF	U	2400	1850	650	650	265	1.8
[redacted]								
EWS 24F-V8	DF/DF	B	2400	2400	650	650	265	1.8

Bending About Y-Y Axis (Loaded Parallel to Wide Faces of Laminations)				Axially Loaded			Fasteners		
Extreme Fiber in Bending[9]	Compression Perpendicular to Grain	Shear Parallel to Grain (Horizontal)[7,10]	Modulus of Elasticity[8]	Tension Parallel to Grain	Compression Parallel to Grain	Modulus of Elasticity[8]	Specific Gravity for Dowel-Type Fastener Design		
							Top or Bottom Face	Side Face	
F_{by} (psi)	$F_{c\perp y}$ (psi)	F_{vy} (psi)	E_y (10^6 psi)	F_t (psi)	F_c (psi)	E_{axial} (10^6 psi)	SG		Combination Symbol
10	11	12	13	14	15	16	17	18	
1450	560	230	1.6	1100	1650	1.7	0.50	0.50	EWS 24F-V4
[redacted]									
1450	560	230	1.6	1100	1650	1.7	0.50	0.50	EWS 24F-V8

Glulam Design Specification

We have field representatives in many major U.S. cities and in Canada
who can help answer questions involving APA trademarked products.
For additional assistance in specifying engineered wood products, contact us:

APA HEADQUARTERS
7011 So. 19th St. ▪ Tacoma, Washington 98466 ▪ (253) 565-6600 ▪ Fax: (253) 565-7265

www.apawood.org

PRODUCT SUPPORT HELP DESK
(253) 620-7400 ▪ E-mail Address: help@apawood.org

DISCLAIMER

The information contained herein is based on APA – The Engineered Wood Association's continuing programs of laboratory testing, product research and comprehensive field experience. Neither APA, nor its members make any warranty, expressed or implied, or assume any legal liability or responsibility for the use, application of, and/or reference to opinions, findings, conclusions or recommendations included in this publication. Consult your local jurisdiction or design professional to assure compliance with code, construction and performance requirements. Because APA has no control over quality of workmanship or the conditions under which engineered wood products are used, it cannot accept responsibility for product performance or designs as actually constructed.

Form No. Y117E/Revised August 2008

APA

REPRESENTING THE ENGINEERED WOOD INDUSTRY

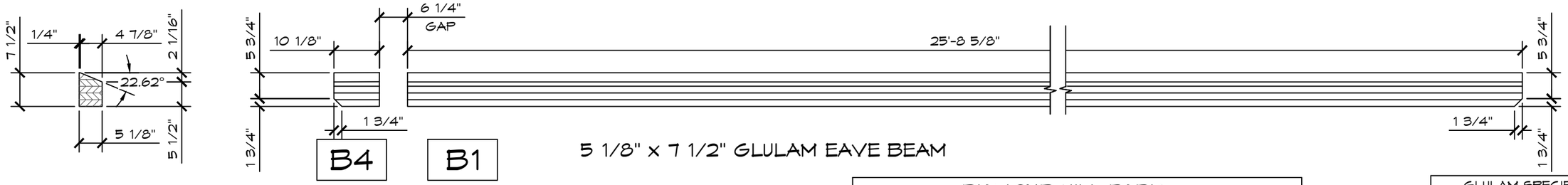

5 1/8" x 7 1/2" GLULAM EAVE BEAM

1 5 1/8" GLULAM BEAM

SCALE: 1/2" = 1'-0"

JOB NAME: DIAMOND HILL PARK
JOB # DHP01 QUANTITY: 1 AS SHOWN
QUANTITY: 1 OPPOSITE

GLULAM SPECIFICATIONS	
MATERIAL:	DOUGLAS FIR: 24F-V4
ADHESIVE:	100% WATERPROOF GLUE
FABRICATION:	AS PER DRAWING
APPEARANCE:	ARCHITECTURAL S3S
SEALER:	UNSEALED
PROTECTION:	INDIVIDUAL COVER
CERTIFICATE:	APA-EWS

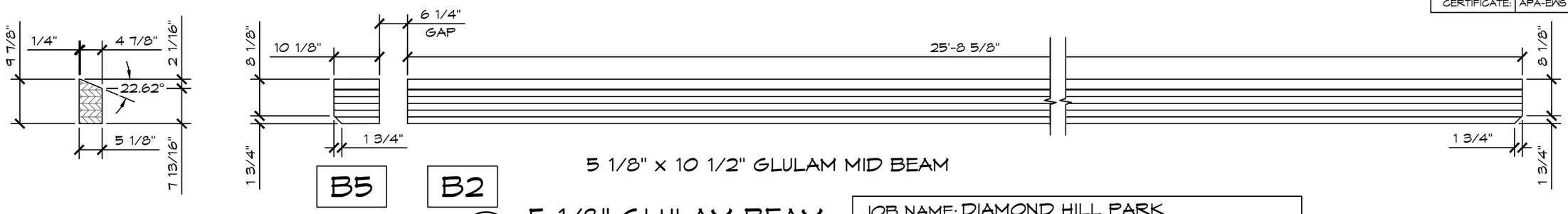

5 1/8" x 10 1/2" GLULAM MID BEAM

2 5 1/8" GLULAM BEAM

SCALE: 1/2" = 1'-0"

JOB NAME: DIAMOND HILL PARK
JOB # DHP01 QUANTITY: 1 AS SHOWN
QUANTITY: 1 OPPOSITE

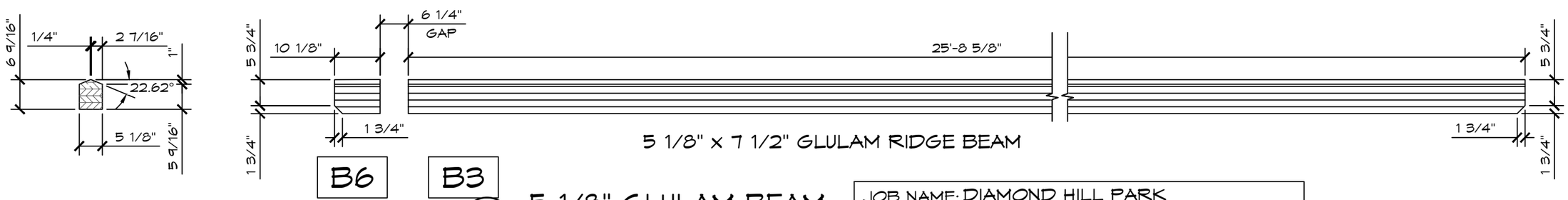

5 1/8" x 7 1/2" GLULAM RIDGE BEAM

3 5 1/8" GLULAM BEAM

SCALE: 1/2" = 1'-0"

JOB NAME: DIAMOND HILL PARK
JOB # DHP01 QUANTITY: 1 AS SHOWN
QUANTITY: - OPPOSITE

ROMTEC
18240 NORTH BANK ROAD
ROSEBURG, OR 97470
(541)-496-3541 FAX (541)-496-0803

MANUFACTURING

© 2020 ROMTEC, INC. ALL RIGHTS RESERVED. THESE PLANS AND DRAWINGS MAY NOT BE REPRODUCED, ADAPTED OR FURTHER DISTRIBUTED, AND NO BUILDINGS MAY BE CONSTRUCTED FROM THESE PLANS, WITHOUT THE WRITTEN PERMISSION OF ROMTEC, INC.

DATE: 7/15/2020
DRAWN BY: JRM

()=REFERENCE DIMENSION
TOLERANCES (UNLESS OTHERWISE SPECIFIED)

FRACTIONS	±1/16
.XX	±.010
.XXX	±.005
ANGLES	±1/2°

GLULAM BEAMS
5 1/8"

REV	DESCRIPTION	DATE	BY
1	CORRECT TITLE PG, ADD GLULAM SPEC	07/27/2020	TY

MASS90#
SHEET 1 OF 1
DWG. NO. Z2-DHP01

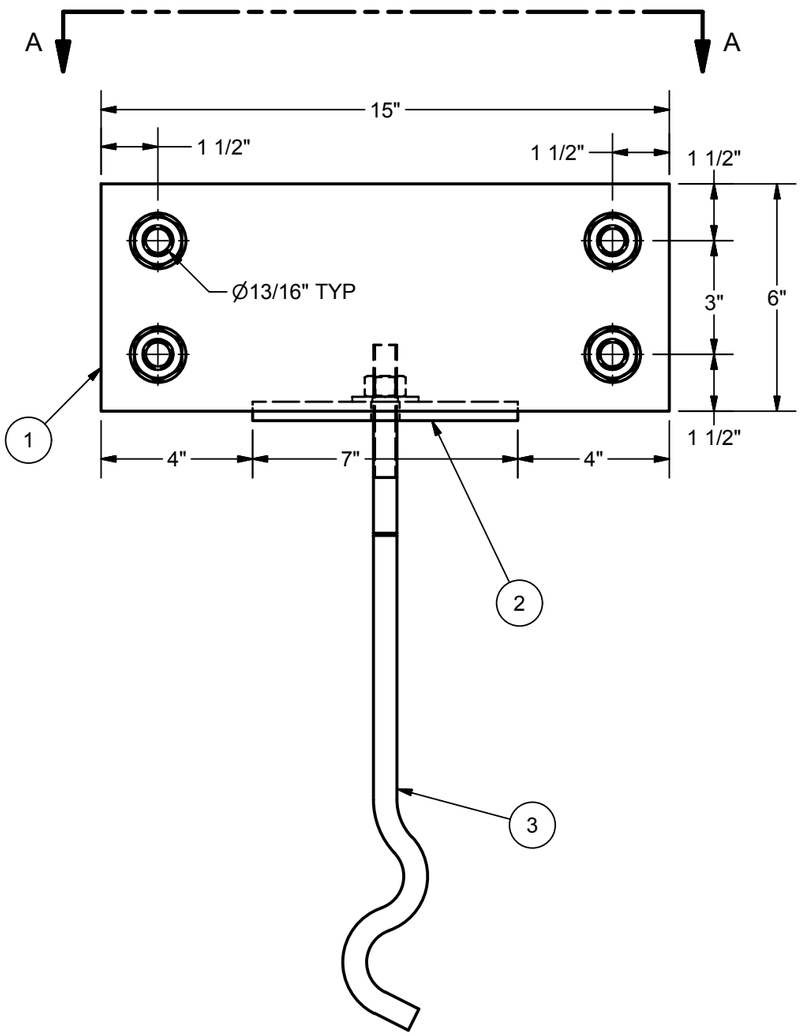

FRONT VIEW
SCALE 1 / 4

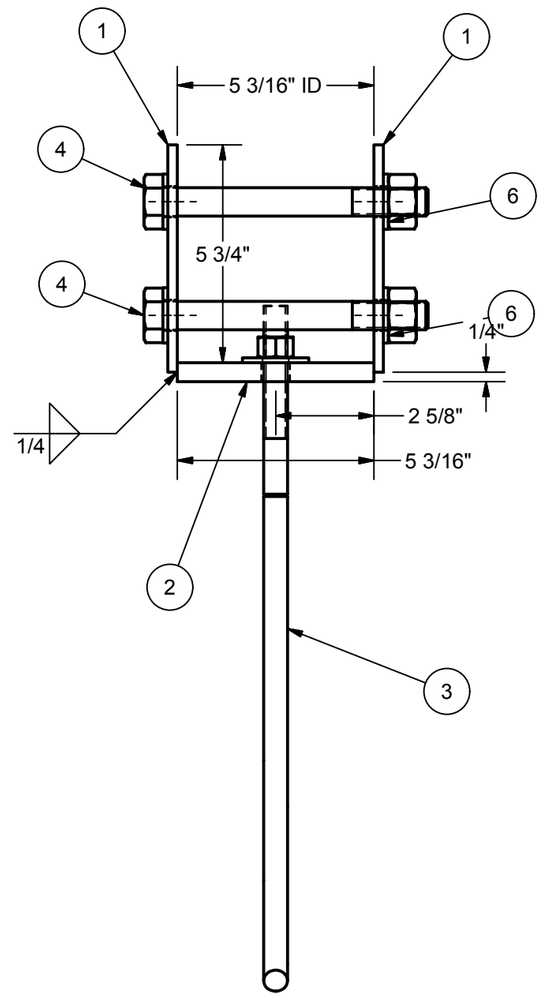

SIDE VIEW
SCALE 1 / 4

PARTS LIST

ITEM	ITEM QTY	PART NUMBER	DESCRIPTION
1	2	BT-0615-5001-PL-.25-FM-MS PLATE 6 x 15 WITH 13_16 HOLES	1/4" MS PLATE 6" x 15" (w/4 - 13/16" HOLES)
2	1	BT-0705-5001-PL-.5-FM-MS PLATE 7 x 5.1875	1/2" MS PLATE 7" x 5-3/16" WITH 3/4" HOLE
3	1	FN-017-5001-ST-0.625-USP STB16 ANCHOR BOLT	USP STB16 ANCHOR BOLT WITH WASHER AND NUT
4	4	FN-007-5001-ST-0.75-HH BOLT .75x7	HEAVY HEX BOLT 3/4" x 7"
5	8	FN-001-5004-ST-0.75-WASHER 1.469 OD	WASHER 3/4" x 1.469" OD
6	4	FN-000-5001-ST-0.75-HH NUT .75	HEAVY HEX NUT 3/4"

POWDER COAT COLOR: BLACK

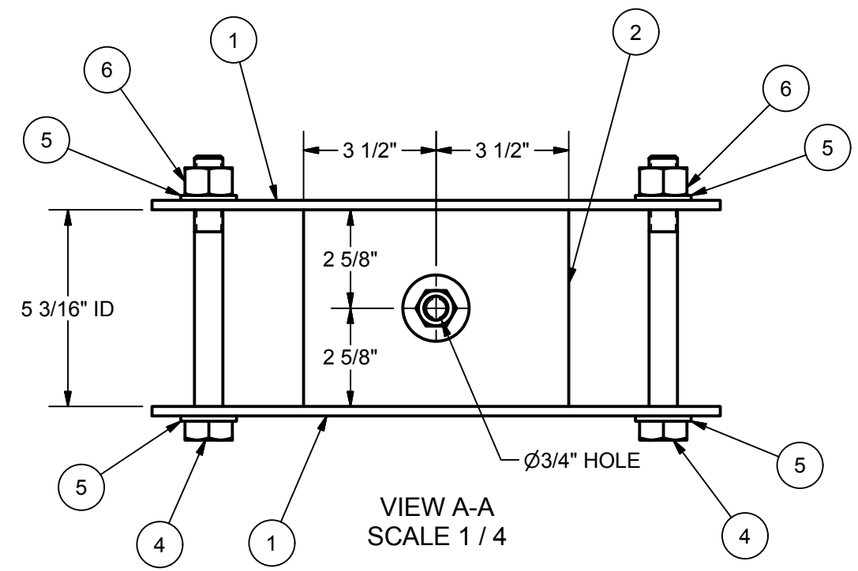

VIEW A-A
SCALE 1 / 4

ROMTEC
18240 NORTH BANK ROAD
ROSEBURG, OR 97470
(541)-496-3541
FAX (541)-496-0803

MANUFACTURING

© 2017 ROMTEC, INC. ALL RIGHTS RESERVED. THESE PLANS AND DRAWINGS MAY NOT BE REPRODUCED, ADAPTED OR FURTHER DISTRIBUTED, AND NO BUIILDINGS MAY BE CONSTRUCTED FROM THESE PLANS, WITHOUT WRITTEN PERMISSION OF ROMTEC, INC.

DATE: 8/24/2017
DRAWN BY: LS

()=REFERENCE DIMENSION
TOLERANCES (UNLESS OTHERWISE SPECIFIED)

FRACTIONS	±1/16
.XX	±.010
.XXX	±.005
ANGLES	±1/2°

BRACKET
5 1/8" GLB MIDSPAN HOLDDOWN

REV	DESCRIPTION	DATE	BY

BOM PART: 5602
SHEET 1 OF 2
DWG. NO. BT-000-1301

PARTS LIST			
ITEM	ITEM QTY	PART NUMBER	DESCRIPTION
1	1	BT-0305-5001-PL-.375-FM-MS PLATE 3 x 5.1875	3/8" MS PLATE 3" x 5-3/16"
2	2	BT-0304-5001-PL-.125-HL-MS PLATE 3 x 3.5	1/8" MS PLATE 3" x 3-1/2" WITH 5/16" HOLES
3	2	FN-010-5001-RB-0.625-CT-REBAR DOWELS	#5 REBAR 10" LONG
4	2	BT-0101-5001-PL-.125-FM-MS PLATE 1 x 1	1/8" MS PLATE 1" x 1"
5	8	FN-003_5001_ST-0.25-LAG SCREW .25 x 2.5	LAG SCREW 1/4" x 2-1/2"

POWDER COAT COLOR: BLACK

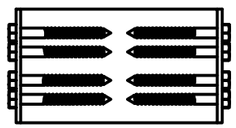

TOP VIEW
SCALE 1 / 4

NOTE: INSTALL PLATES SO THAT BOLT HOLES DO NOT LINE UP

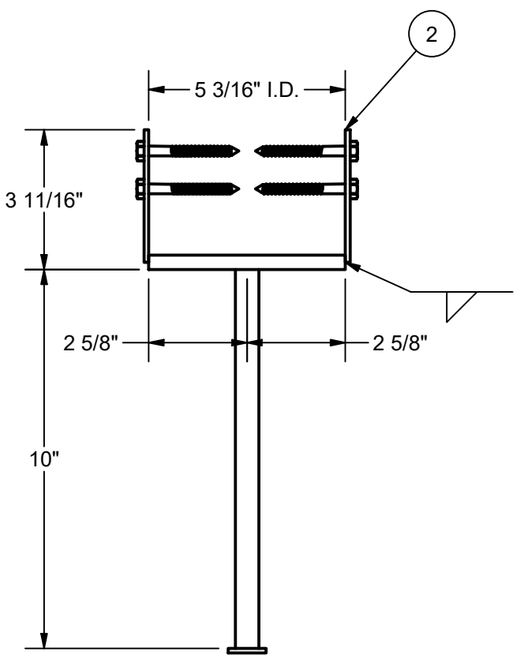

FRONT VIEW
SCALE 1 / 4

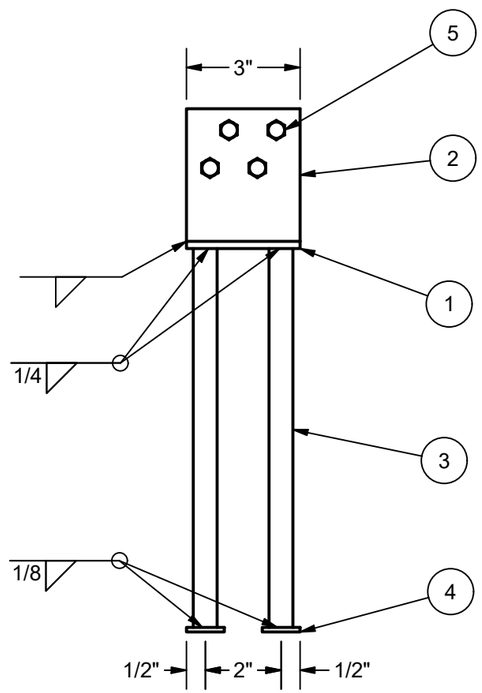

SIDE VIEW
SCALE 1 / 4

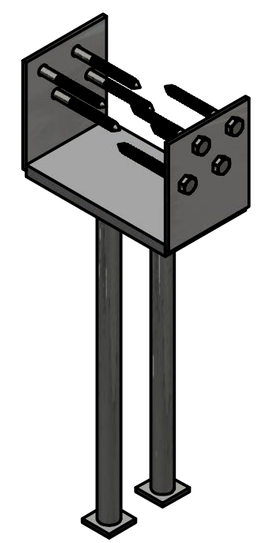

ISOMETRIC VIEW
SCALE 1 / 4

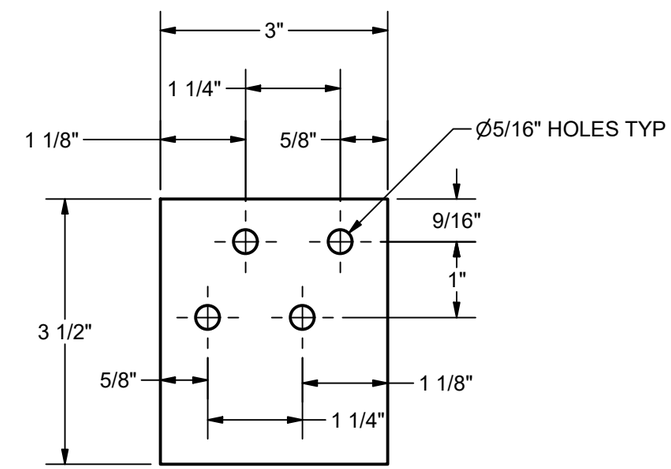

FRONT VIEW
SCALE 1 / 2

2 1/8" MS PLATE DETAIL
SCALE: 1/2
QTY: 2

ROMTEC
18240 NORTH BANK ROAD
ROSEBURG, OR 97470
(541)-496-3541
FAX (541)-496-0803

MANUFACTURING

© 2018 ROMTEC, INC. ALL RIGHTS RESERVED. THESE PLANS AND DRAWINGS MAY NOT BE REPRODUCED, ADAPTED OR FURTHER DISTRIBUTED, AND NO BUIILDINGS MAY BE CONSTRUCTED FROM THESE PLANS, WITHOUT WRITTEN PERMISSION OF ROMTEC, INC.

DATE: 9/20/2017
DRAWN BY: LS

()=REFERENCE DIMENSION
TOLERANCES (UNLESS OTHERWISE SPECIFIED)

FRACTIONS	±1/16
.XX	±.010
.XXX	±.005
ANGLES	±1/2°

BRACKET
5 1/8" GLB HOLDDOWN DBL

REV	DESCRIPTION	DATE	BY
1	SEE MASTER PRODUCTION REVISION LIST	1/29/18	LS
2	SEE MASTER PRODUCTION REVISION LIST	2/21/18	LS
3	SEE MASTER PRODUCTION REVISION LIST	4/9/18	LS
4	SEE MASTER PRODUCTION REVISION LIST	4/23/18	CR

BOM PART: 5605
SHEET 1 OF 1
DWG. NO. BT-000-1302

(TRUSS BRACKETS) BILL OF MATERIALS

ITEM	REQ'D	PART NO.	DESCRIPTION
1	2	Z3-DHP01	SADDLE BRACKET - RIDGE
1	4	Z4-DHP01	SADDLE BRACKET - MID
1	4	Z5-DHP01	SADDLE BRACKET - EAVE
1	1	Z6-DHP01	SADDLE BRACKET - WEB (CENTER BOTTOM CHORD)

(TIMBER TRUSS) BILL OF MATERIALS

ITEM	REQ'D	PART NO.	DESCRIPTION
1	2		6" X 8" RESAWN TIMBER TRUSS - TOP CHORD
1	1		6" X 8" RESAWN TIMBER TRUSS - BOTTOM CHORD
1	2		6" X 8" RESAWN TIMBER TRUSS - WEB STRUT
1	1		6" X 8" RESAWN TIMBER TRUSS - KING POST

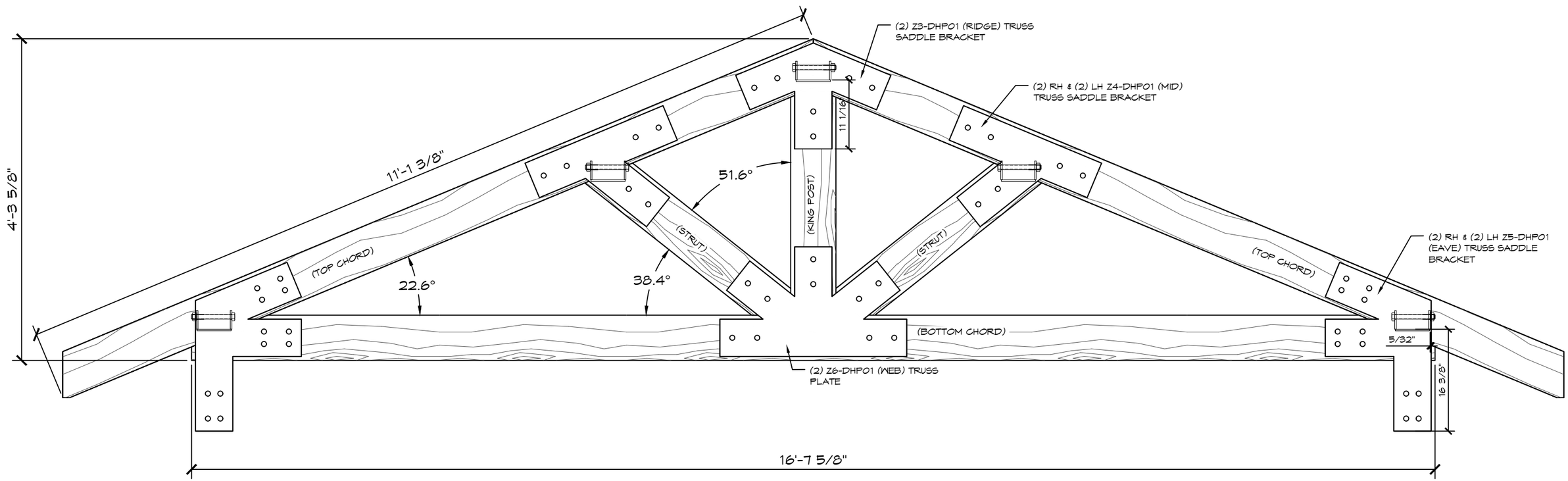

1 TIMBER TRUSS ASSEBLY

SCALE: 3/4" = 1'-0"

JOB NAME: DIAMOND HILL PARK

JOB # DHP01 QUANTITY: 1 AS SHOWN

QUANTITY: - OPPOSITE

ROMTEC 18240 NORTH BANK ROAD ROSEBURG, OR 97470 (541)-496-3541 FAX (541)-496-0803

MANUFACTURING

© 2020 ROMTEC, INC. ALL RIGHTS RESERVED. THESE PLANS AND DRAWINGS MAY NOT BE REPRODUCED, ADAPTED OR FURTHER DISTRIBUTED, AND NO BUILDINGS MAY BE CONSTRUCTED FROM THESE PLANS, WITHOUT THE WRITTEN PERMISSION OF ROMTEC, INC.

DATE: 7/15/2020

DRAWN BY: JRM

MASS90#

()=REFERENCE DIMENSION
TOLERANCES (UNLESS OTHERWISE SPECIFIED)
FRACTIONS ±1/16
.XX ±.010
.XXX ±.005
ANGLES ±1/2°

TRUSS ASSEMBLY
6x8 RESAWN TIMBER

REV	DESCRIPTION	DATE	BY
1	ADD BOM	07/27/2020	TY

SHEET 1 OF 2

DWG. NO. Z1-DHP01

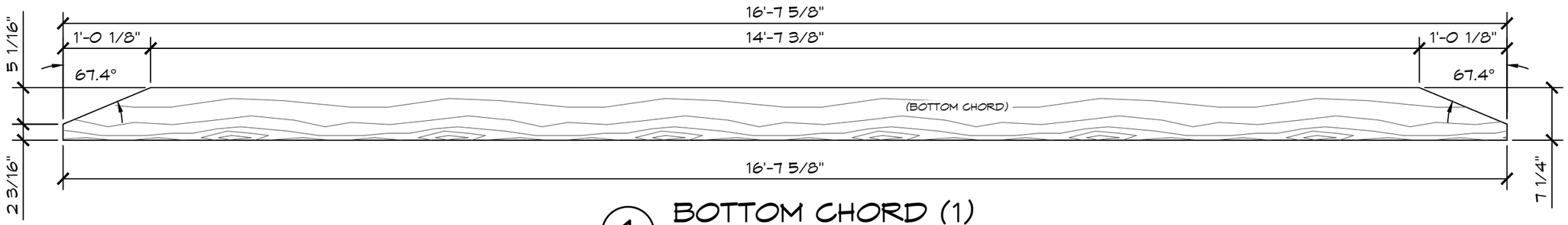

1 BOTTOM CHORD (1)

SCALE: 3/4" = 1'-0"

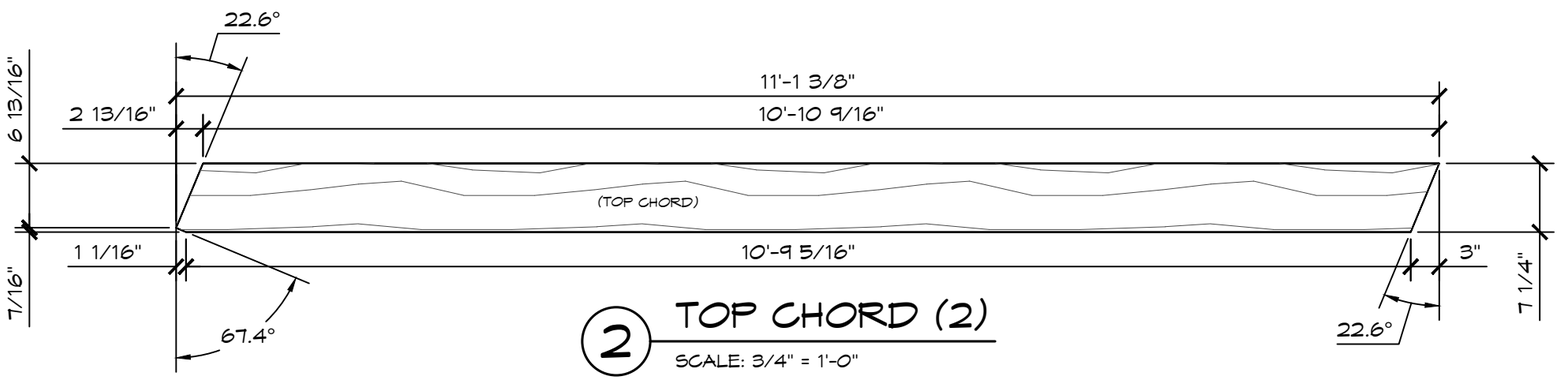

2 TOP CHORD (2)

SCALE: 3/4" = 1'-0"

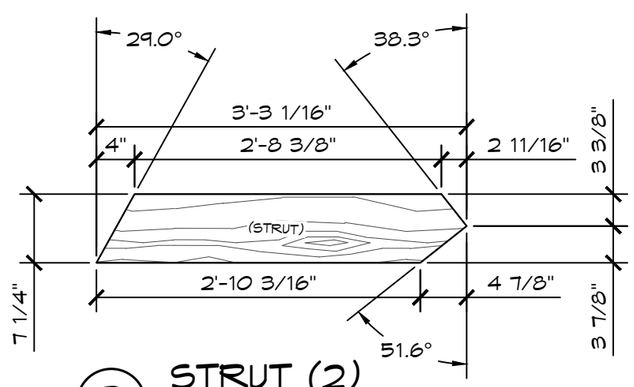

3 STRUT (2)

SCALE: 3/4" = 1'-0"

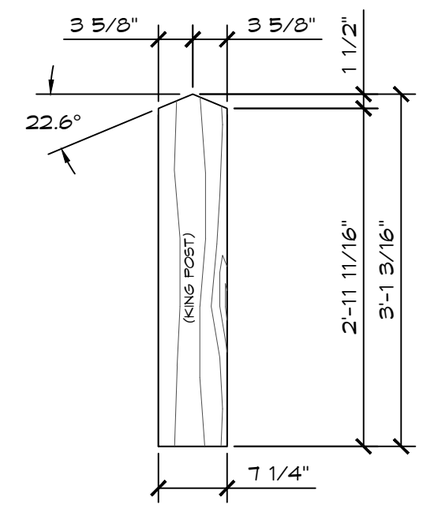

4 KING POST (1)

SCALE: 3/4" = 1'-0"

ROMTEC
18240 NORTH BANK ROAD
ROSEBURG, OR 97470
(541)-496-3541 FAX (541)-496-0803

MANUFACTURING

© 2020 ROMTEC, INC. ALL RIGHTS RESERVED. THESE PLANS AND DRAWINGS MAY NOT BE REPRODUCED, ADAPTED OR FURTHER DISTRIBUTED, AND NO BUILDINGS MAY BE CONSTRUCTED FROM THESE PLANS, WITHOUT THE WRITTEN PERMISSION OF ROMTEC, INC.

DATE: 7/15/2020
DRAWN BY: JRM
MASS90#

()=REFERENCE DIMENSION
TOLERANCES (UNLESS OTHERWISE SPECIFIED)

FRACTIONS	±1/16
.XX	±.010
.XXX	±.005
ANGLES	±1/2°

TRUSS PARTS
6x8 RESAWN TIMBER

REV	DESCRIPTION	DATE	BY

SHEET 2 OF 2
DWG. NO. Z1-DHP01

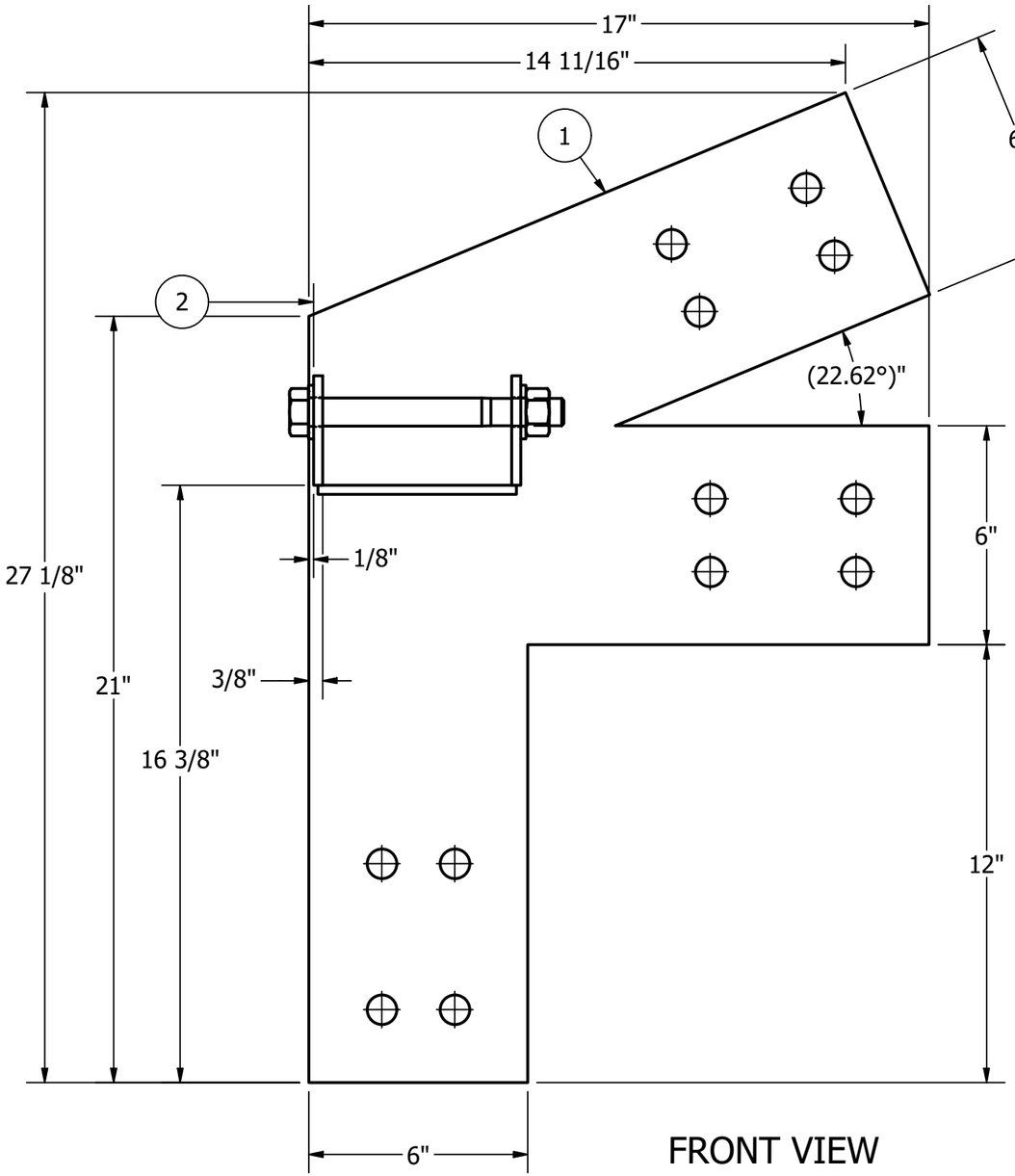

FRONT VIEW
SCALE 1/4

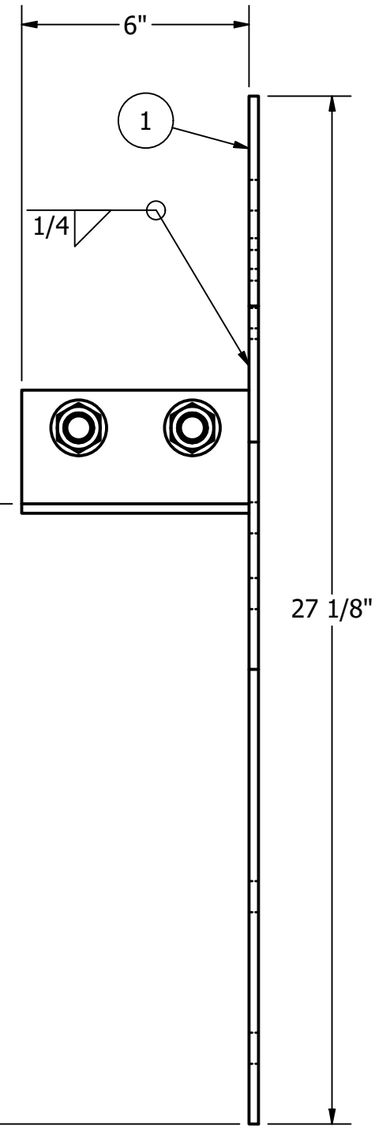

SIDE VIEW
SCALE 1/4

PARTS LIST

ITEM	QTY	PART NUMBER	DESCRIPTION
1	1	TB-050-5001~Truss Plate 17 x 27.125 x 0.25	1/4" MS PLATE 17" x 27 1/8" WITH (12) 13/16" HOLES
2	1	BT-000-3042~Saddle Weldment 5.125 GLB	

POWDER COAT COLOR: BLACK

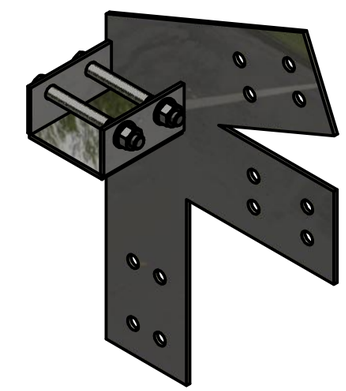

ISOMETRIC VIEW
SCALE 1/8

JOB NAME: DIAMOND HILL PARK, RI
JOB NO. DHP01
QUANTITY AS SHOWN: 2
QUANTITY OPPOSITE: 2

ROMTEC
18240 NORTH BANK ROAD
ROSEBURG, OR 97470
(541)-496-3541
FAX (541)-496-0803

MANUFACTURING

© 2020 ROMTEC, INC. ALL RIGHTS RESERVED. THESE PLANS AND DRAWINGS MAY NOT BE REPRODUCED, ADAPTED OR FURTHER DISTRIBUTED, AND NO BUIILDINGS MAY BE CONSTRUCTED FROM THESE PLANS, WITHOUT WRITTEN PERMISSION OF ROMTEC, INC.

DATE: 7/16/2020
DRAWN BY: CR

()=REFERENCE DIMENSION
TOLERANCES (UNLESS OTHERWISE SPECIFIED)

FRACTIONS	±1/16
.XX	±.010
.XXX	±.005
ANGLES	±1/2°

BRACKET - w/ WELDMENT
17" x 27 1/8" - w/ SADDLE BRACKET

REV	DESCRIPTION	DATE	BY

BOM PART: Z5-DHP01
SHEET 1 OF 1
DWG. NO. Z5-DHP01

PARTS LIST			
ITEM	QTY	PART NUMBER	DESCRIPTION
1	1	Z4-DHP01~Truss Plate 24.4375 x 19.4375 x 0.25	1/4" MS PLATE 24 7/16" x 19 7/16" WITH (6) 13/16" HOLES
2	1	BT-000-3042~Saddle Weldment 5.125 GLB	

POWDER COAT COLOR: BLACK

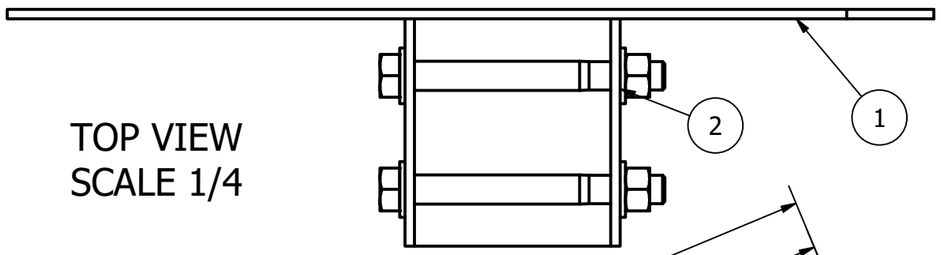

TOP VIEW
SCALE 1/4

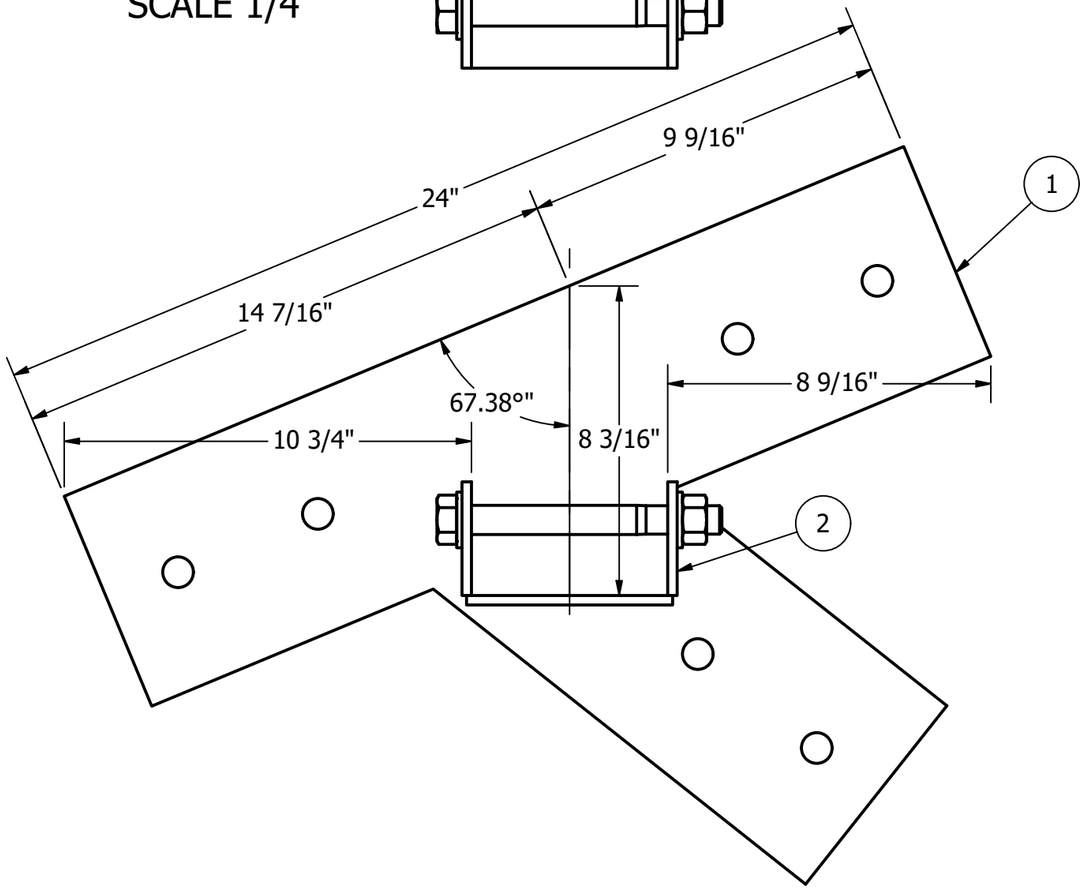

FRONT VIEW
SCALE 1/4

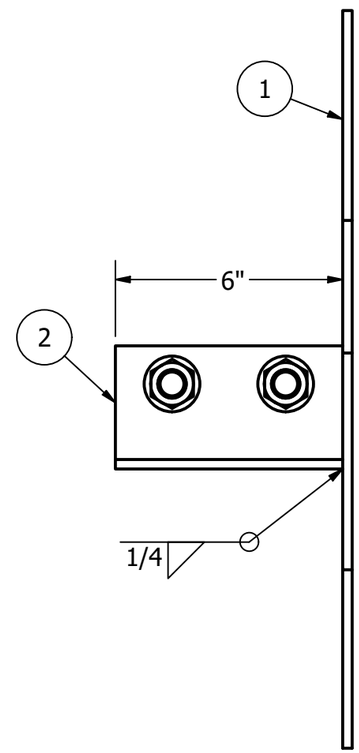

SIDE VIEW
SCALE 1/4

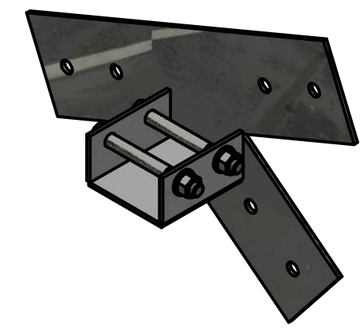

ISOMETRIC VIEW
SCALE 1/8

JOB NAME: DIAMOND HILL PARK, RI
JOB NO. DHP01
QUANTITY AS SHOWN: 2
QUANTITY OPPOSITE: 2

ROMTEC
18240 NORTH BANK ROAD
ROSEBURG, OR 97470
(541)-496-3541
FAX (541)-496-0803

MANUFACTURING

© 2020 ROMTEC, INC. ALL RIGHTS RESERVED. THESE PLANS AND DRAWINGS MAY NOT BE REPRODUCED, ADAPTED OR FURTHER DISTRIBUTED, AND NO BUIILDINGS MAY BE CONSTRUCTED FROM THESE PLANS, WITHOUT WRITTEN PERMISSION OF ROMTEC, INC.

DATE: 7/16/2020
DRAWN BY: CR

()=REFERENCE DIMENSION
TOLERANCES (UNLESS OTHERWISE SPECIFIED)

FRACTIONS	±1/16
.XX	±.010
.XXX	±.005
ANGLES	±1/2°

PLATE- w/ WELDMENT
24 7/16" X 19 7/16" - w/ SADDLE BRACKET

REV	DESCRIPTION	DATE	BY

BOM PART:
SHEET 1 OF 1
DWG. NO. Z4-DHP01

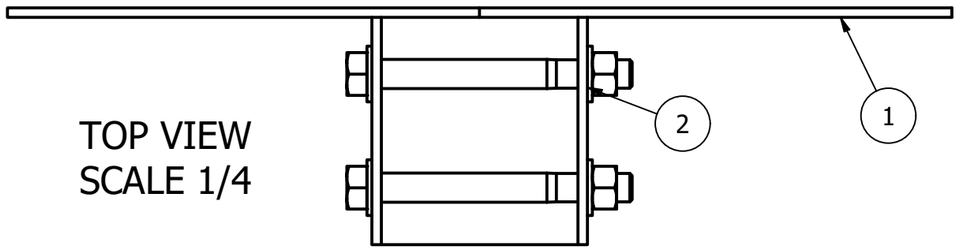

TOP VIEW
SCALE 1/4

PARTS LIST			
ITEM	QTY	PART NUMBER	DESCRIPTION
1	1	TB-050-5010~Truss Plate 24.09375 x 17 x 0.25	1/4" MS PLATE 24 15/16" x 17" WITH (6) 13/16" HOLES
2	1	BT-000-3042~Saddle Weldment 5.125 GLB	

POWDER COAT COLOR: BLACK

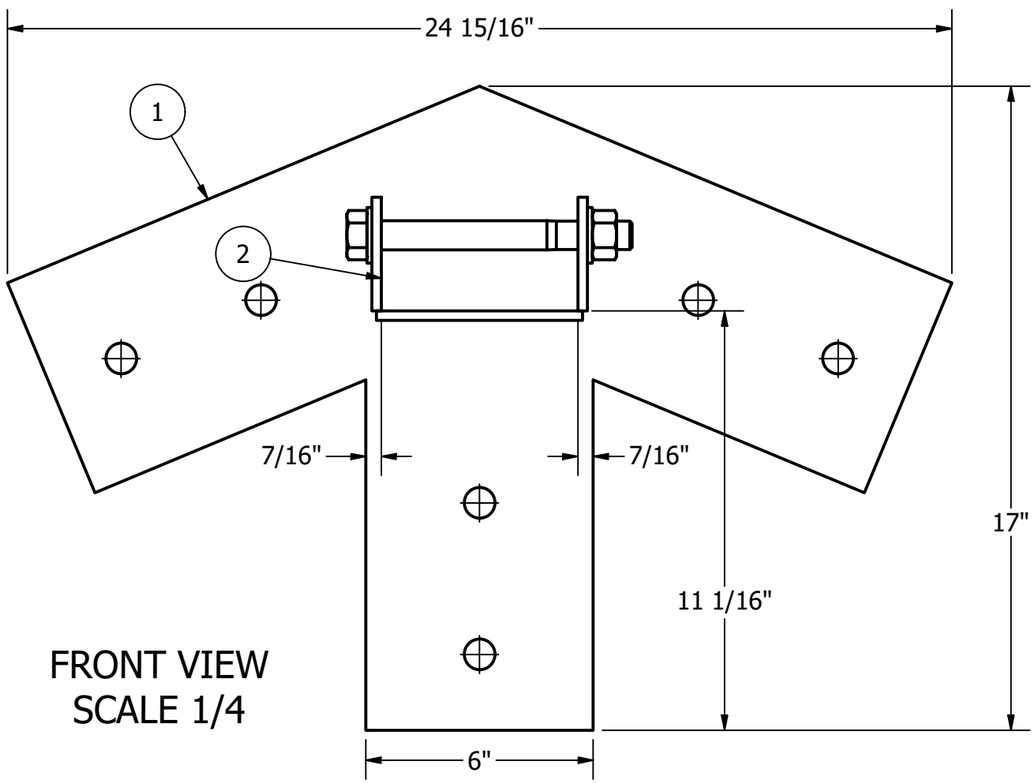

FRONT VIEW
SCALE 1/4

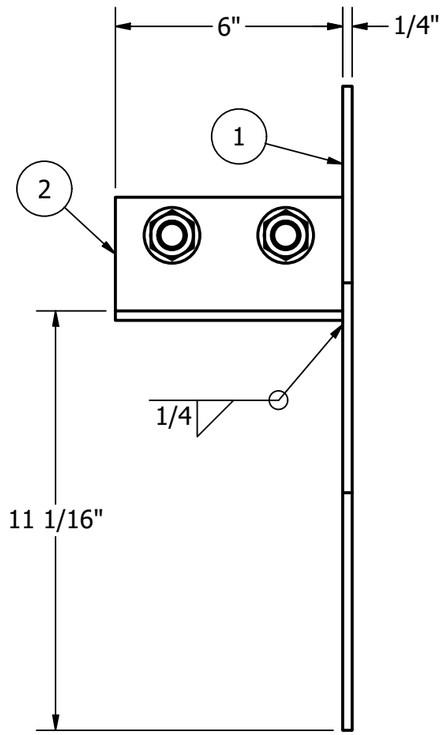

SIDE VIEW
SCALE 1/4

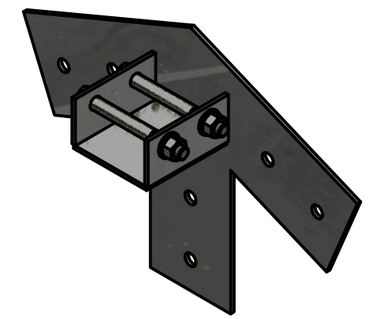

ISOMETRIC VIEW
SCALE 1/8

JOB NAME: DIAMOND HILL PARK, RI
JOB NO. DHP01
QUANTITY AS SHOWN: 2
QUANTITY OPPOSITE: --

ROMTEC
18240 NORTH BANK ROAD
ROSEBURG, OR 97470
(541)-496-3541
FAX (541)-496-0803

MANUFACTURING

© 2020 ROMTEC, INC. ALL RIGHTS RESERVED. THESE PLANS AND DRAWINGS MAY NOT BE REPRODUCED, ADAPTED OR FURTHER DISTRIBUTED, AND NO BUIILDINGS MAY BE CONSTRUCTED FROM THESE PLANS, WITHOUT WRITTEN PERMISSION OF ROMTEC, INC.

DATE: 7/16/2020
DRAWN BY: CR

()=REFERENCE DIMENSION
TOLERANCES (UNLESS OTHERWISE SPECIFIED)

FRACTIONS	±1/16
.XX	±.010
.XXX	±.005
ANGLES	±1/2°

BRACKET - w/ WELDMENT
24 15/16" X 17" - w/ SADDLE BRACKET

REV	DESCRIPTION	DATE	BY

BOM PART:
SHEET 1 OF 1
DWG. NO. Z3-DHP01

PARTS LIST			
ITEM	QTY	PART NUMBER	DESCRIPTION
1	1	Z6-DHP01~Truss Plate 30 x 17.5625 x 0.25	1/4" MS PLATE 30" x 17 9/16" WITH (10) 13/16" HOLES

POWDER COAT COLOR: BLACK

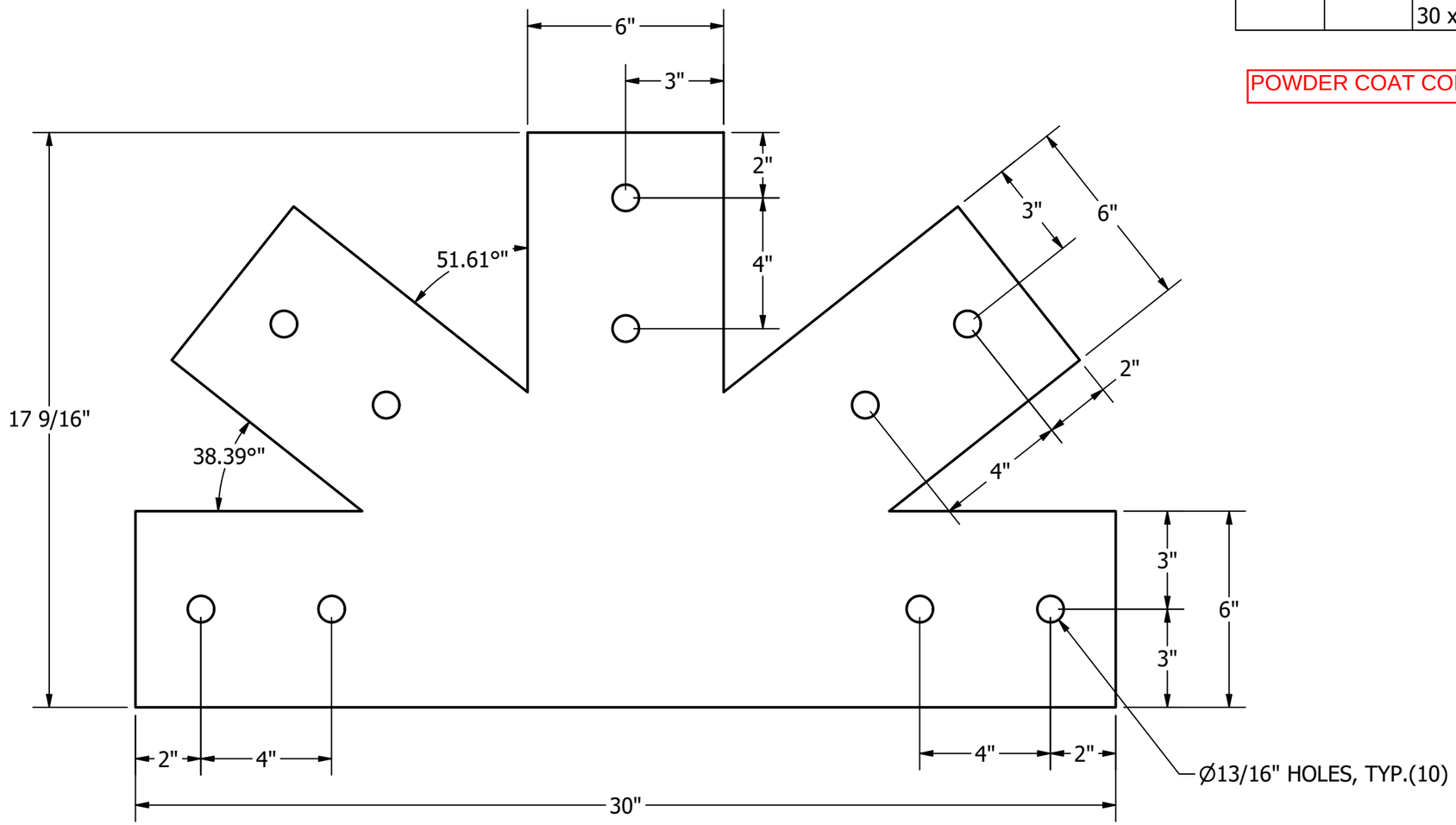

* BURN PATTERN ON LAYER "BURN"

MATERIAL : 1/4" MS PL

1

KING BOTTOM PLATE W/ WEB

SCALE: 1/4"=1'-0"

QTY: PER P.O.

JOB NAME: DIAMOND HILL PARK, RI
JOB NO. DHP01
QUANTITY AS SHOWN: 2
QUANTITY OPPOSITE: -

ROMTEC
18240 NORTH BANK ROAD
ROSEBURG, OR 97470
(541)-496-3541
FAX (541)-496-0803

MANUFACTURING

© 2020 ROMTEC, INC. ALL RIGHTS RESERVED. THESE PLANS AND DRAWINGS MAY NOT BE REPRODUCED, ADAPTED OR FURTHER DISTRIBUTED, AND NO BUIILDINGS MAY BE CONSTRUCTED FROM THESE PLANS, WITHOUT WRITTEN PERMISSION OF ROMTEC, INC.

DATE: 7/16/2020
DRAWN BY: CR

()=REFERENCE DIMENSION
TOLERANCES (UNLESS OTHERWISE SPECIFIED)

FRACTIONS	±1/16
.XX	±.010
.XXX	±.005
ANGLES	±1/2°

KING BOTTOM PLATE W/ WEB
30" X 17 9/16"

REV	DESCRIPTION	DATE	BY

BOM PART:

SHEET 1 OF 1

DWG. NO. Z6-DHP01

PARTS LIST			
ITEM	QTY	PART NUMBER	DESCRIPTION
1	1	BT-0806-5007-PL-.25-FM-FB 7.25 x 5.50	1/4" FB 5-1/2" x 7-1/4"
2	2	BT-1506-5003-PL-.25-HL-FB 14.5 x 5.5 WITH 13_16 HOLES	1/4" FB 5-1/2" x 14-1/2 WITH (2) 13/16" HOLES
3	1	BT-0606-5008-PL-.25-FM-FB 6 x 5.625	1/4" FB 5-5/8" x 6"
4	2	FN-008-5001-ST-0.75-HH BOLT .75x7.5	HEAVY HEX BOLT 3/4" x 7-1/2"
5	2	FN-001-5001-ST-0.75-HEX NUT	HEX NUT 3/4"
6	4	FN-001-5004-ST-0.75-WASHER 1.469 OD	WASHER 3/4" x 1.469" OD

POWDER COAT COLOR: BLACK

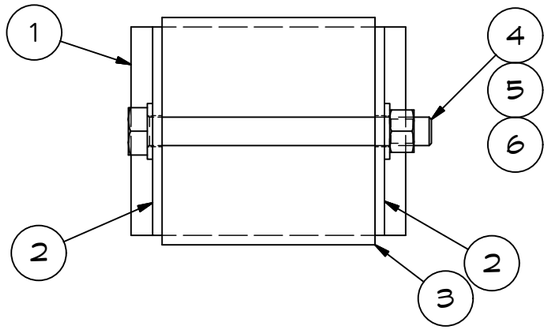

TOP VIEW
SCALE 3"=1'-0"

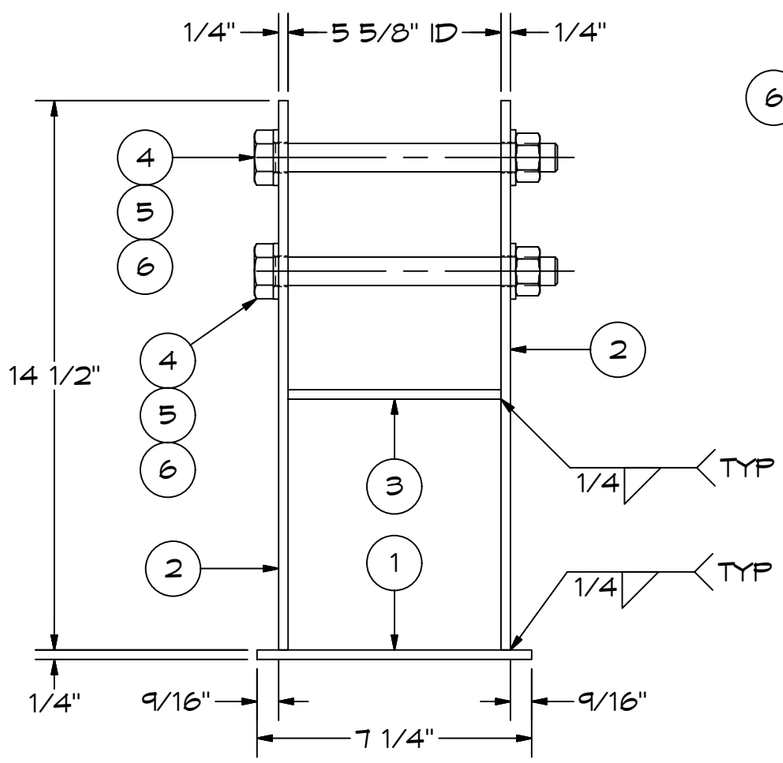

FRONT VIEW
SCALE 3"=1'-0"

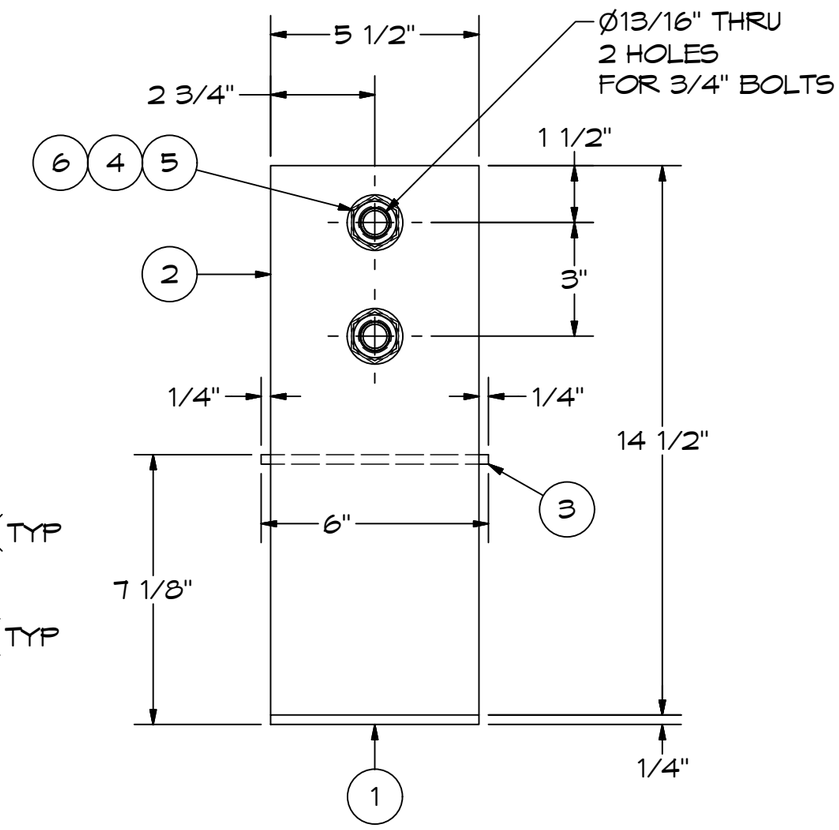

SIDE VIEW
SCALE 3"=1'-0"

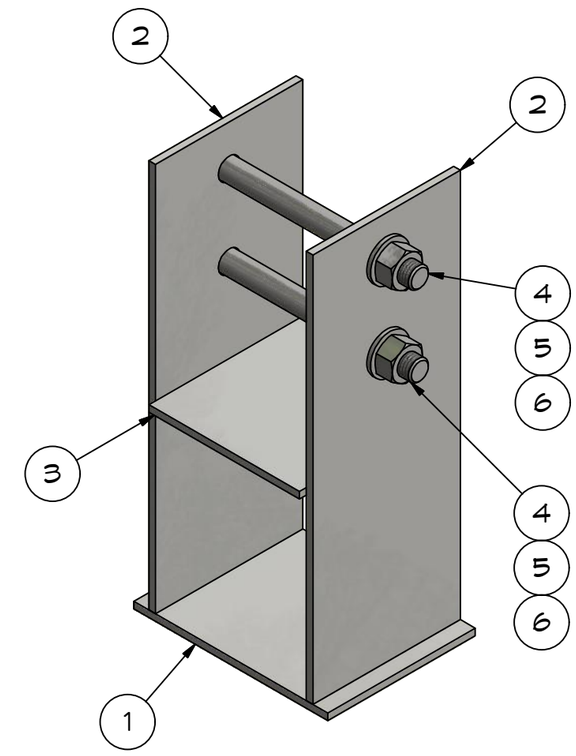

ISOMETRIC VIEW
SCALE 3"=1'-0"

ROMTEC
18240 NORTH BANK ROAD
ROSEBURG, OR 97470
(541)-496-3541
FAX (541)-496-0803

MANUFACTURING

©2020 ROMTEC, INC. ALL RIGHTS RESERVED. THESE PLANS AND DRAWINGS MAY NOT BE REPRODUCED, ADAPTED OR FURTHER DISTRIBUTED, AND NO BUILDINGS MAY BE CONSTRUCTED FROM THESE PLANS, WITHOUT WRITTEN PERMISSION OF ROMTEC, INC.

DATE: 3/24/2020
DRAWN BY: AM

()=REFERENCE DIMENSION
TOLERANCES (UNLESS OTHERWISE SPECIFIED)

FRACTIONS	±1/16
.XX	±.010
.XXX	±.005
ANGLES	±1/2°

POST ANCHOR

6" x 8" WOOD COLUMN (5-1/2" x 7-1/4")

REV	DESCRIPTION	DATE	BY

BOM PART:

SHEET 1 OF 2

DWG. NO. BT-000-1025

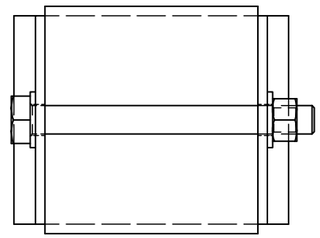

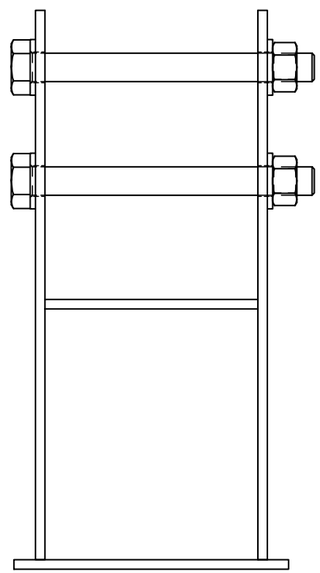

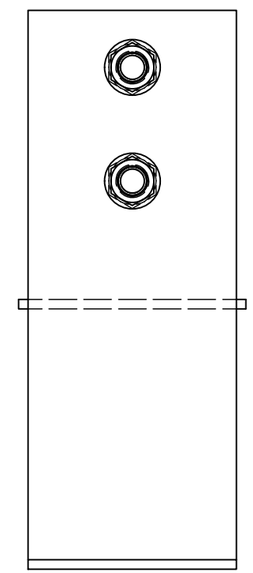

ROMTEC
18240 NORTH BANK ROAD
ROSEBURG, OR 97470
(541)-496-3541
FAX (541)-496-0803

MANUFACTURING

©2020 ROMTEC, INC. ALL RIGHTS RESERVED. THESE PLANS AND DRAWINGS MAY NOT BE REPRODUCED, ADAPTED OR FURTHER DISTRIBUTED, AND NO BUIILDINGS MAY BE CONSTRUCTED FROM THESE PLANS, WITHOUT WRITTEN PERMISSION OF ROMTEC, INC.

DATE: 3/24/2020

DRAWN BY: AM

()=REFERENCE DIMENSION
TOLERANCES (UNLESS OTHERWISE SPECIFIED)

FRACTIONS	±1/16
.XX	±.010
.XXX	±.005
ANGLES	±1/2°

POST ANCHOR
ACAD VIEWS

REV	DESCRIPTION	DATE	BY

BOM PART:

SHEET 2 OF 2

DWG. NO.
BT-000-1025

ROMTEC TONGUE & GROOVE DECKING

The following is an example of the Romtec tongue & groove decking included in the design of this building.

Specifications

- 2x6 decking
- Kiln dried select deck
- Douglas fir
- Finish seal or paint is installer supplied

Dektite® Pipe Flashings

- Range for normal applications.
- Pleated skirt adjusts to any roof pitch for stress-free connections.
- Ribbed base for increased sealant retention and superior water-proofing.
- Aluminium base can be shaped by hand to any known profile.
- Fixing kits available for easy installation. No specialist tools or labour required.

Description

Dektite flexible pipe flashings conform to any sheet profile or roof pitch providing faster installation and dramatically reduced maintenance.
When correctly fitted they eliminate all leaks and because they allow for movement between pipe and roof there is no risk of seal breakdown. With a life expectancy in excess of 20 years Dektite flashings are the ideal method of sealing pipes and services from soil vents to heating flues.

Size Range

The rubber sleeve can be trimmed to the exact OD required for a perfect fit, so fewer sizes are required. In fact just nine sizes cover all pipes from 5mm to 480mm.

TEMP. RANGE		SIZE	OUTSIDE DIA. OF PIPE								
Max 115° EPDM (grey)	Max 200° Silicone (red)	Base diameter	Flat or profiled sheet up to 40mm depth					Deep ribbed profiles – deeper than 40mm depth			
Code No.		mm	mm					mm			
DF101	-	120	5	to	65			5	to	55	
DF102	-	160	50	to	75			50	to	65	
DF103	DF203	195	5	to	120			5	to	110	
DF104	DF204	235	75	to	160			75	to	135	
DF105	DF205	275	115	to	195			115	to	170	
DF106	DF206	325	125	to	230			125	to	195	
DF107	DF207	370	150	to	275			150	to	225	
DF108	DF208	420	175	to	325			175	to	270	
DF109	DF209	650	250	to	480			250	to	420	

Dektite® Retrofit Flashings

- For use in awkward applications or for repairing around failed flashings.
- Unique flexible closure system in stainless steel.
- Trim lines and sizes on sleeve aid accurate cutting for closest possible fit around pipe.
- Flexible rubber sleeve between independent seals at head and base allows freedom of movement between pipe and roof and reduces vibration and noise transmission.

Description

Dektite Retrofit flashings are the ideal solution for the elimination of leaks around pipes or other roof penetrations where existing flashings have failed. Providing a completely weatherproof seal, on any profiled sheet or pitch, Retrofit flashings are designed specifically for use where obstructions, bends and cowls prevent the application of a standard Dektite.
Retrofit flashings are quickly and easily installed by wrapping around the penetration and simply fixing down on to the roof sheet. This offers the opportunity for reliable flashings to be fitted retrospectively and dramatically reduces maintenance time and costs.

Size Range

The rubber sleeve can be trimmed to the exact OD required for a perfect fit, so far fewer different sizes are required. In fact just three sizes cover all pipes from 20mm to 255mm.

TEMP. RANGE	SIZE	OUTSIDE DIA. OF PIPE					
Max 115° EPDM (grey)	Base diameter	Flat or profiled sheet up to 40mm depth			Deep ribbed profiles – deeper than 40mm depth		
Code No.	Code No.	mm			mm		
RF801	160	20	to	70	20	to	60
RF802	275	50	to	190	50	to	160
RF803	370	85	to	255	85	to	215

StormShield™

Ice and Water Protector

"Invisible" protection against roof leaks.

StormShield™
ICE AND WATER PROTECTOR

IKO StormShield™ Ice & Water Protector

An economical modified bitumen roll roofing product with a self-adhesive backing protected by a silicone-treated release sheet, which is easily removed during installation.

- Helps prevent water leakage due to ice dams and wind-driven rain
- Improved flexibility for superior performance
- Slip-resistant surface for safe application
- Tear-resistant membrane
- Glass fiber-reinforced for extra strength
- Self-adhesive for watertight sealing
- Self-sealing around roofing nails

PRODUCT SPECIFICATIONS

Length	65′ (19.8 m)
Width	36″ (914 mm)
Roll Contents	195 sq. ft. (18.1 m²)

Note: All values shown are approximate.

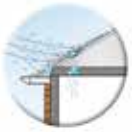

Protects Against Wind-Driven Rain

Rain, propelled by wind is blown under the shingles, allowing water to penetrate through the unprotected roof deck, causing interior damage. Roofs with lower slopes (2:12 to 5:12) are even more susceptible to this problem.

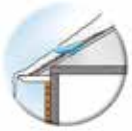

Helps Prevent Ice Dams

When melted snow runs down the roof to the colder eaves, an ice dam can form and cause water to back up under the shingles. Eventually, the water penetrates the unprotected roof deck and leaks through, damaging the building's interior.

PRO4 ROOFING COMPONENTS

Shingles alone are usually not enough to protect your home.
IKO has developed superior multi-layered roofing components incorporating our industry-leading products. A complete roofing system ensures your roof's optimum performance.

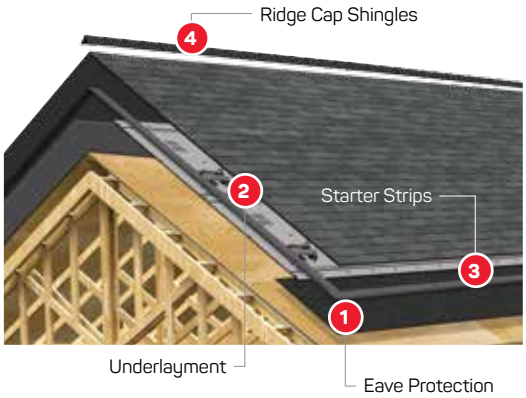

1. **Eave Protection.** GoldShield™, ArmourGard™ or StormShield™ Ice & Water Protectors
2. **Underlayment.** Stormtite® or RoofGard-Cool Grey™
3. **Roof Starters.** Leading Edge Plus™
4. **Ridge Cap Shingles.** Hip & Ridge™ Series or Ultra HP™

Use IKO StormShield™ Ice & Water Protector on these critical roof areas.

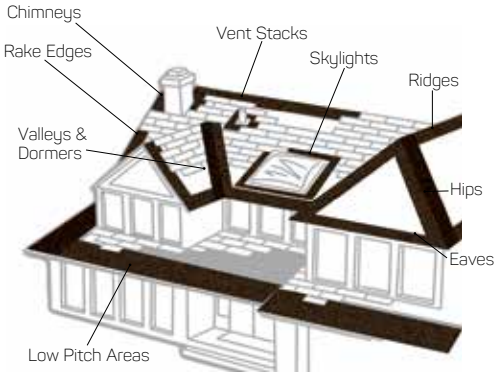

IKO®

© Copyright 05/17 - MR1L056

Find out more about our products now by talking to an IKO Sales Representative, your professional roofing contractor or contact us directly at: **United States 1-888-IKO-ROOF** (1-888-456-7663), **Canada 1-855-IKO-ROOF** (1-855-456-7663) or visit our website at: **www.iko.com**

Note: The information in this document is subject to change without notice. IKO assumes no responsibility for errors that may appear in this document.

HardiePlank®

HardiePlank® Lap Siding Product Description

HardiePlank lap siding is factory-primed fiber-cement lap siding available in a variety of styles and textures. Please see your local James Hardie® product dealer for product availability. HardiePlank® lap siding comes in 12-ft. lengths. Nominal widths from 5 1/4 in. to 12 in. create a range of exposures from 4 in. to 10 3/4 in.

HardiePlank lap siding is also available with ColorPlus® Technology as one of James Hardie's prefinished products. ColorPlus Technology is a factory applied, oven-baked finish available on a variety of James Hardie siding and trim products. See your local dealer for details and availability of products, colors and accessories.

Cedarmill ©

Smooth

Beaded Cedarmill ©

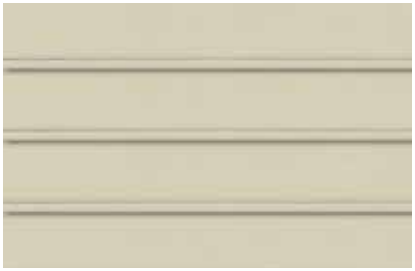

Beaded Smooth

Colonial Roughsawn

Colonial Smooth

Cedarmill is the standard Romtec offering. Other finishes are available at a price increase.

HardiePlank will be primed, to be painted onsite by the installing contractor.

ROMTEC POLY PIPE

The following is an example of the Romtec Poly Pipe included in the design of this building.

Specifications

- 12” High Density Polyethylene (HDPE)

POLY PIPE

ExxonMobil Chemical

PAXON™

High Density Polyethylene

7004 Crosslinkable Rotational Molding Resin

Description

7004 is a UV-stabilized, 35 mesh crosslinkable HDPE powder intended for use in rotational molding. Properly molded parts made with 7004 show exceptional environmental stress cracking resistance, thermal resistance, and notched failure resistance. The high flow base resin promotes rapid melting and outstanding part fill during processing while the finished part exhibits high performance characteristics reflecting crosslinked molecular weight. This resin is available in various colors, plus natural.

Applications

- High ESCR, outdoor storage tanks, vessels
- Marine fuel tanks
- Recreational vehicle fuel tanks
- Large refuse containers

Additive Package	Stabilizer
7004	Long term UV stabilizer

Molded Properties[2]	Test Based On	Unit SI (English)	Typical Value[1]
Tensile Strength at Yield	ASTM D 638	MPa (psi)	21 (3,000)
Elongation at Break	ASTM D 638	%	> 300
Tensile Modulus of Elasticity	ASTM D 638	MPa (psi)	793 (115,000)
Flexural Modulus[3]	ASTM D 790	MPa (psi)	689 (100,000)
Impact Brittleness Temperature	ASTM D 746	°C (°F)	< -118 (< -180)
Crosslink Potential	ExxonMobil Method		2.5
Environmental Stress Crack Resistance[4]	ASTM D 1693	hrs	F_0 > 1,000
Notched Izod	ASTM D 256	joules/m (ft-lb/in)	907 (17)
Notched Izod (-40°C)	ASTM D 256	joules/m (ft-lb/in)	240 (4.5)
Thermal Properties			
Vicat Softening Temperature	ASTM D 1525	°C (°F)	121 (250)
Heat Deflection Temperature, 66 psi	ASTM D 648	°C (°F)	66 (150)

Processing[5]			
Bulk Density	ASTM D 1895	kg/m^3 (lbs/ft^3)	370 (23)

1. Values are typical and should not be interpreted as specifications. Values may change with future development..
2. All molded properties were measured on rotomolded specimens.
3. Method1, Procedure A (1'x3'x0.125'), Tangent calculation.
4. Condition A and B, 10% Igepal CO-630.
5. Measurement based on resin as supplied.

Revised January 2006

©2006 Exxon Mobil Corporation. To the extent the user is entitled to disclose and distribute this document, the user may forward, distribute, and/or photocopy this copyrighted document only if unaltered and complete, including all of its headers, footers, disclaimers, and other information. You may not copy this document to a Web site. ExxonMobil does not guarantee the typical (or other) values. Analysis may be performed on representative samples and not the actual product shipped. The information in this document relates only to the named product or materials when not in combination with any other product or materials. We based the information on data believed to be reliable on the date compiled, but we do not represent, warrant, or otherwise guarantee, expressly or impliedly, the merchantability, fitness for a particular purpose, suitability, accuracy, reliability, or completeness of this information or the products, materials, or processes described. The user is solely responsible for all determinations regarding any use of material or product and any process in its territories of interest. We expressly disclaim liability for any loss, damage, or injury directly or indirectly suffered or incurred as a result of or related to anyone using or relying on any of the information in this document. There is no endorsement of any product or process, and we expressly disclaim any contrary implication. The terms, "we", "our", "ExxonMobil Chemical", or "ExxonMobil" are used for convenience, and may include any one or more of ExxonMobil Chemical Company, Exxon Mobil Corporation, or any affiliates they directly or indirectly steward. ExxonMobil, the ExxonMobil Emblem, the "Interlocking X" Device, and Paxon are trademarks of Exxon Mobil Corporation.

ROMTEC VENT STACK COVER

The following is an example of the Romtec Vent Stack Cover. The cover allows air flow and protects from objects entering the vent and vault below.

Specifications

- Protective cover for standard Romtec 12” ID vent stack
- Available in galvanized
- ¾” mesh screen

COR-GUARD
Standard
FRP Door (Fiberglass Reinforced Polymer)

OSHKOSH
Door Company

CGS

SPECIFICATIONS

Cor-Guard CGS door	This door is specifically designed for use in harsh environments. It's all FRP and polymer construction is ideal for any project where the doors are frequently exposed to water, salt and other harsh chemicals. Also due to its completely sealed and smooth surfaces all six sides it is an ideal option for hospitals and laboratory clean rooms. Due to its unique design the CGS door is extremely strong yet light weight
Maximum sizes	4-0 X 10-0 single 8-0 X 10-0 regular or DE pair (3-0x7-0 on 1 3/8")
Thickness	1 3/8", 1 3/4", 2" or 2 1/4"
Core	2 lb density closed cell polystyrene foam
Stiles	Solid polymer
Top & Bottom Rails	Solid polymer Bottom rails are oversized to allow for field trimming if necessary
Blocking	Each door comes with polymer closer reinforcement and lock block
Core Assembly	Stiles and rails are securely bonded to core
Door Faces	Standard faces are .090 thick smooth FRP Pebble face options also available
Special Details	Machining for templated hardware, lights, louvers, dutch doors, Refer to specific technical sheets for details and limitations
Finishes	Primed for field painting, standard paint colors and custom matched paint colors Pebble face options include standard and custom match colors
Warranty	10 years interior or exterior applications See complete Warranty for full details

Visit us at:

WWW.Cor-Guard.com or Oshkoshdoor.com

Oshkosh Door Company reserves the right to change design and/or details of its products without notice.

ES Series

Specifications

Doors shall be ES series Manufactured by Edgewater FRP Door, Neenah, Wisconsion. Doors shall be of full flush construction 1-3/4" in thickness, manufactured utilizing pultruded fiberglass components for flexibility, durability, superior strength and chemical resistance. Laminated composite door faces shall be urethane fused to the stile and rail assembly, including the vertical stiffeners and surface area of core material, utilizing a two-part 100 percent reactive urethane adhesive, and then cured under pressure until completely bonded. Both lock and hinge stiles and top and bottom rails of the door shall be filled and ground smooth for a completely sealed construction. Doors shall have a beveled (1/8" in 2") lock edge.

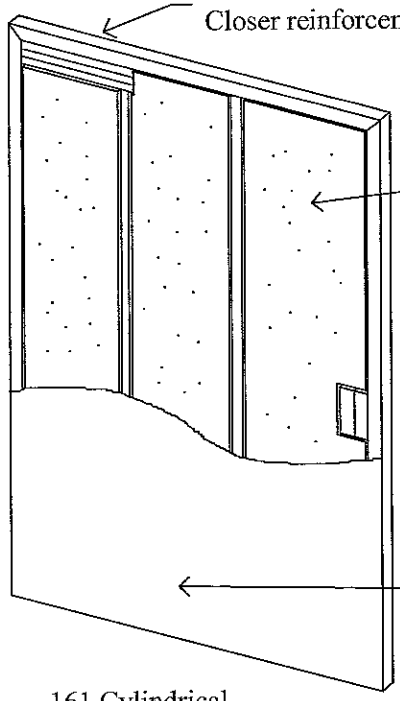

Please note: astragals supplied by Edgewater only if noted on order.

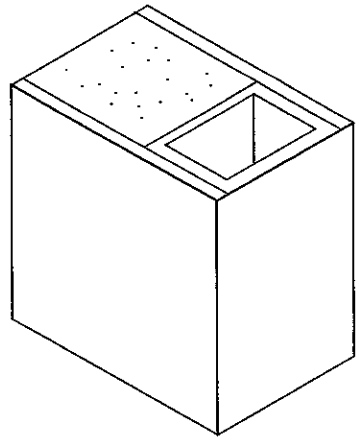

Door hinge
Reinforcement

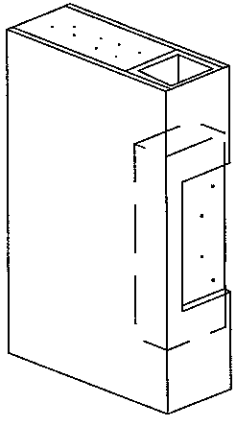

161 Cylindrical
Lock reinforcement

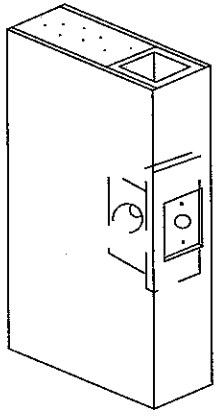

86 Mortise lock
reinforcement

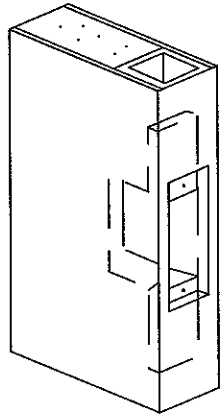

Hinge & lock stiles
Top & bottom rails
(seamless)

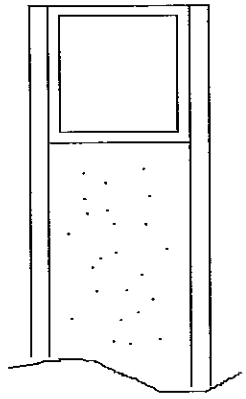

By Oshkosh Door Co.
Phone: 920.233.6161
Fax: 800.782.1281
E-mail: doors@oshkoshdoor.com
Web: www.cor-guard.com

Standard Finish Colors

DOORS ARE PRIMED TO BE PAINTED ON-SITE BY INSTALLER.

Gray Primer

Please do not use this for final color approval. Please request a physical sample for use in final color approval.

©2012 Oshkosh Door Company

ECBB1101NRP

Five Knuckle
Ball Bearing
Standard Weight

Description:

- ANSI A2112 (Brass)
- ANSI A5112 (Stainless steel)
- Two ball bearings
- Non-removable pin with button tip and plug
- Only available in 4-1/2" x 4-1/2" (114 mm x 114 mm)
- Fasteners are AMS x 1/2 WS
- For use on medium weight doors or doors requiring medium frequency service
- Available with 316SS

PRODUCT SPECIFICATIONS

FASTENERS:
- All machine and half wood

MATERIAL:
- Brass w/ Stainless Steel pin ANSI A2112
- Stainless Steel with Stainless Steel pin ANSI A5112

FINISHES:
- US15, US26, US26D, US32D, 32D (316SS)

198S

Door Protection Plate
0.038" gauge stainless steel

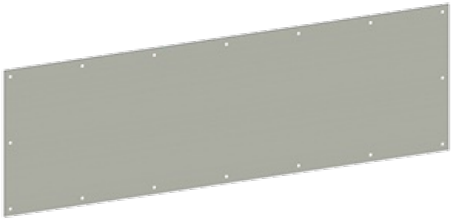

NFPA Notes:

- NFPA 80 Standards - 6.4.5 Protection Plates 6.4.5.1 - Factory installed protection plates shall be installed in accordance with the listing of the door. 6.4.5.2 - Field installed protection plates shall be labeled and installed in accordance with their listing. 6.4.5.3 - Labeling shall not be required where the top of the protection plate is not more than 16" (406mm) above the bottom of the door.

PRODUCT SPECIFICATIONS

GAUGE:
- 0.038" (1 mm)

MATERIALS:
- Stainless Steel

FINISHES:
- US32D

ORDER:
- Plates are sized on even inches. Odd size available and priced to next larger size.

OPTIONS:
- UL listed for US32 and US32D with screw fasteners (must specify UL stamp)
- Spanner head screws
- Torx head screws
- Round Corners
- Wrap around side and bottom return
- 0.125" material

CERTIFICATION:
- Meets ANSI A156.6 for J101 Metal Armor Plate, J102 Metal Kickplate, and J103 Metal Mop Plate

NATIONAL GUARD PRODUCTS

Saddle Threshold

424E

Materials & Finishes
Aluminum alloy 6063, T5 temper
Mill finish
DKB - dark bronze finish

- 4" wide x 1/2" tall
- Fluted top
- BHMA certified to ANSI/BHMA A156.21 1,000 lb. load test
- Typical wall thickness .109"
- Weight: .60 lbs./ft.
- #10 x 1-1/2" FH zinc plated wood screws included

Optional Slip Resistant SIA Finish

Project:
Submitted by:
Date:
Notes:

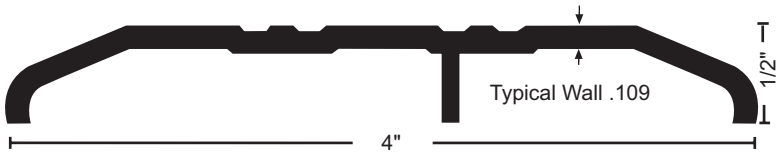

4985 East Raines Road, Memphis, TN 38118 • 800-647-7874
© NGP, Inc. 2017

NATIONAL GUARD PRODUCTS

Neoprene Sweep
200N

Material
Aluminum alloy 6063, T5 temper
Synthetic rubber polymer blend: PVC, Nitrile rubber (NBR), and Chloroprene closed cell advanced elastomeric foam
Neoprene is black

- Very good abrasion resistance, tensile strength and memory
- Flame resistant
- Moisture resistant
- Temperature range -20°F to 200°F
- Good resistance to ozone, sunlight and aging
- BHMA certified to ANSI/BHMA A156.22 performance tests for heat, cold, air infiltration and smoke infiltration
- #6 x 3/4" stainless steel sheet metal screws furnished
- Screw holes slotted for adjustment

Finishes

200NA	Anodized Aluminum
200NB	Gold
200NDKB	Dark Bronze

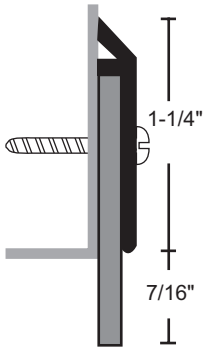

Project:
Submitted by:
Date:
Notes:

4985 East Raines Road, Memphis, TN 38118 • 800-647-7874
© NGP, Inc. 2017

5200 Series

Grade 1 Heavy Duty Door Closer

Ideal for schools, hospitals, and other high-use environments

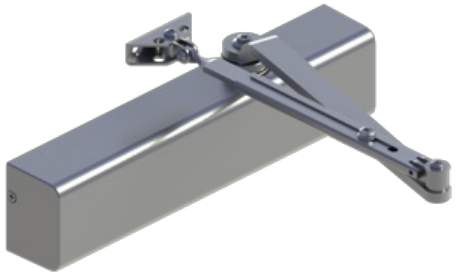

PRODUCT SPECIFICATIONS

SIZE:
- 1-6 adjustable

CERTIFICATIONS:
- BHMA Certified ANSI A156.4, adjustable sizes 1-6
- ADA Compliant ANSI A117.1 Accessibility Code
- UL/cUL Listed for up to 3 hours
- UL10C Positive Pressure Rated
- UL10B Neutral Pressure Rated
- Lifetime Warranty

MATERIAL:
- Aluminum Alloy
- The recommended temperatures for prolonged closer use is between -40° F (-42° C) and 150° F (66° C)

COVER:
- Full plastic cover - Standard
- Slim line plastic cover - Optional
- Full size plated metal cover - Optional

SPRINGS:
- One piece seamless steel spring tube
- Double heat treated steel, tempered springs
- Precision machined, heat treated steel piston

VALVES:
- Adjustable latching and sweep speed valves
- Adjustable backcheck valve - Standard
- Delayed action valve - Optional
- Staked valves - Standard

HANDING:
- Non-Handed

ARMS & BRACKETS:
- Tri-Pack - Regular, parallel arm, and top jamb mount - Standard
- 15% power adjustment in standard arm for regular and top jamb mount

OPTIONAL ARMS:
- Hold Open Arm
- Extra Heavy Duty Hold Open Stop Arm
- Extra Heavy Duty Stop Arm
- Extra Heavy Duty Arm
- Extra Heavy Duty Hold Open Arm
- Extra Heavy Duty Cushion Stop Arm
- Extra Heavy Duty Hold Open Cushion Stop Arm

FASTENERS:
- Self-reaming, self-tapping wood and machine screws
- Sex nuts and bolts

DOOR THICKNESS:
- 1-3/4" (44 mm)
- 1-3/8" - 2-1/4" (36 mm - 57 mm) - Optional

FINISHES:
- ALM, BRZ, DBZ, GOL
- Rust inhibiting primer - Standard

5200 Series Door Closer
Installation Instructions

Grade 1
Meets ANSI A156.4

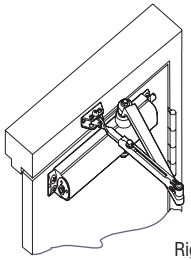

Regular Arm Installation
See Page 2

Left Hand Door - LH
Right Hand Reverse - RHR

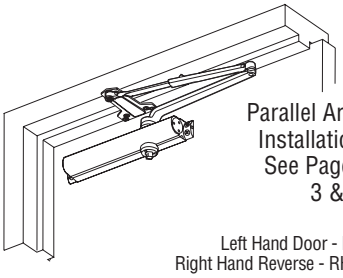

Parallel Arm Installation
See Pages 3 & 4

Left Hand Door - LH
Right Hand Reverse - RHR

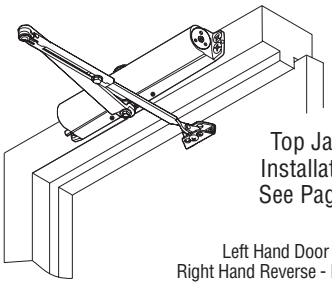

Top Jamb Installation
See Page 5

Left Hand Door - LH
Right Hand Reverse - RHR

CAUTION An incorrectly installed or improperly adjusted door closer can cause property damage or personal injury. These installation instructions should be followed to avoid the possibility of misapplication or misadjustment. **CAUTION**

NOTE: For special applications, a separate door and frame preparation template is packed with these instructions. Use this instruction sheet for installation sequence and closer adjustments only.

- Dimensions are based on standard doors and frames with 1/8" clearance, 5/8" stops, and square edge doors.
- Door and frame must be properly reinforced.
- Non-Handed Door Closers.

NOTE: For Top Jamb Application

A longer connecting rod is required for reveals greater than 4" (102mm)

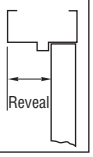

Regular Arm Installation
See Page 2

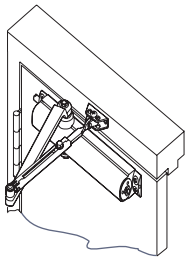

Right Hand Door - RH
Left Hand Reverse - LHR

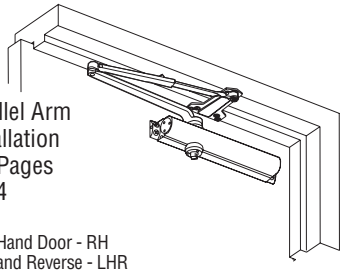

Parallel Arm Installation
See Pages 3 & 4

Right Hand Door - RH
Left Hand Reverse - LHR

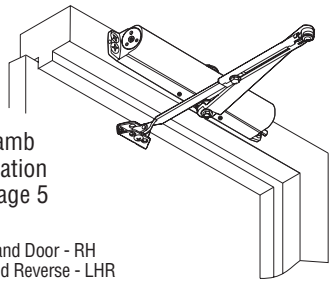

Top Jamb Installation
See Page 5

Right Hand Door - RH
Left Hand Reverse - LHR

- These door closers should **NOT** be installed on the exposed side (weather side) of exterior doors.

TOOLS REQUIRED

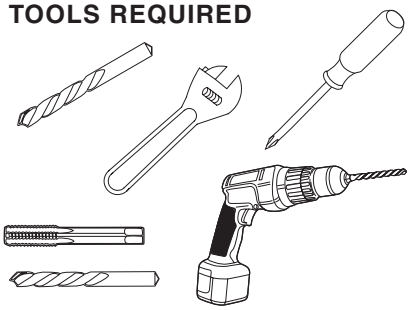

METAL

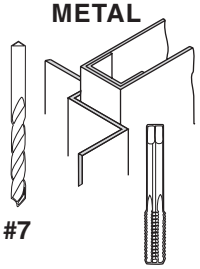

#7

1/4"- 20

WOOD

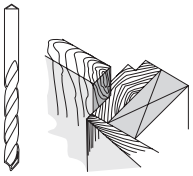

3/16"

Self Drilling Screws Wood and Metal

For wood, drill 3/16" hole

Machine Screws

#7 Drill, 1/4"- 20 Tap

Sleeve Nut and Bolt

Drill 9/32" thru from Closer Side
3/8" Drill other Side

Check building and fire codes to see if your application requires the use of sleeve nuts and bolts.

COMPONENT PARTS

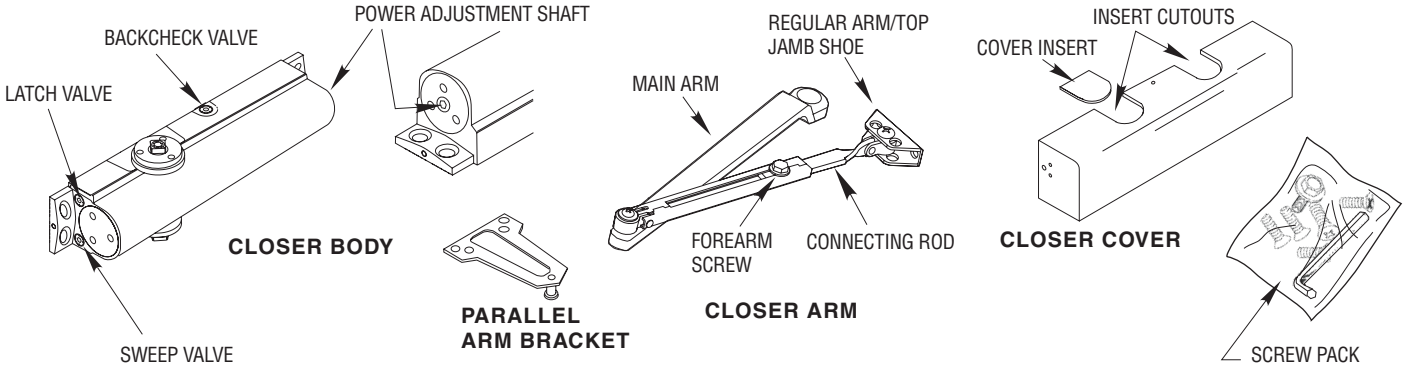

HAGER COMPANIES 139 Victor Street, St. Louis, MO 63104 • (800) 325-9995 • Fax (800) 782-0149

5200 Series Door Closer - Regular Arm
Installation Instructions
Meets ANSI A156.4

1. PARTS

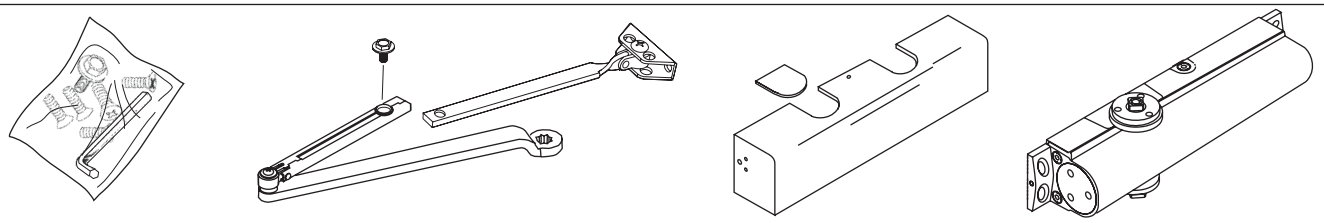

2. MARK AND DRILL HOLES (*Right Hand Shown*)

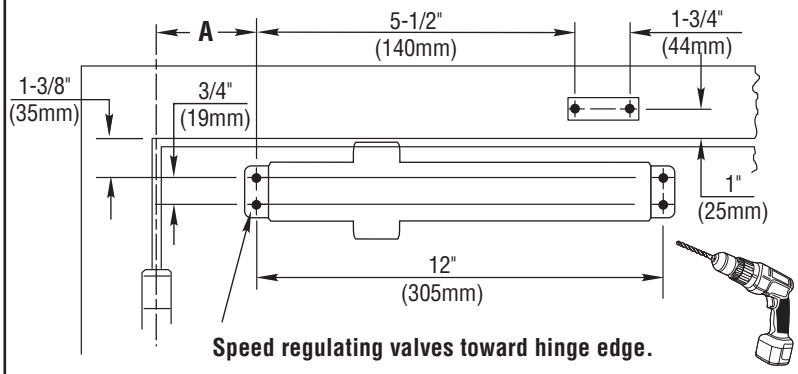

Door Opening	Dimension "A"
To 100	7-1/2" (191mm)
101 to 130	6" (152mm)
131 to *180	4-1/2" (114mm)

*Door/Wall/Hardware/Jamb conditions permitting

Select hand of door and degree of door opening. Fold template on the corresponding line for desired degree of door opening and hand. Match this line with the hinge edge of door and attach template to door. Be sure frame line on template lines up with the bottom edge of frame face. Mark, prep and drill/tap 1/4"-20 holes for closer body and jamb shoe mounting screws.

3. INSTALL CLOSER

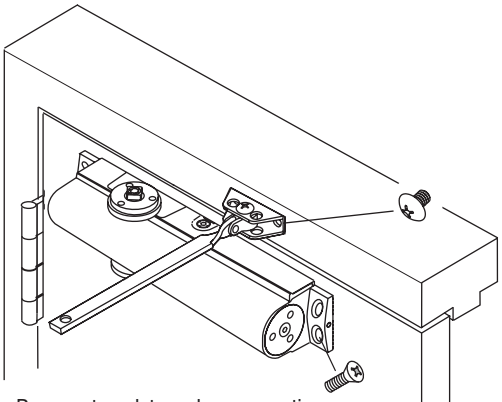

Remove template and use mounting screws to install the closer body to the door and the jamb shoe to the frame. Closer body should be oriented so that the speed regulating valves are toward the hinge stile of door.

4. INSTALL MAIN ARM

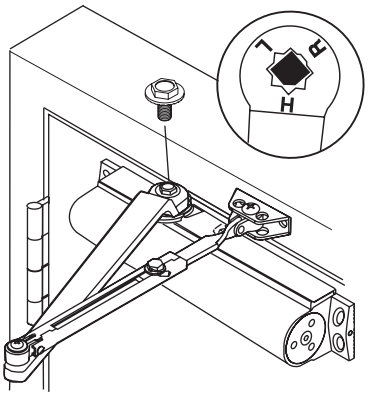

Orient main arm so that the "H", located on the main arm, lines up with the flat on the spindle. Press arm down on spindle and secure with spindle bolt.

5. INSTALL MAIN ARM AND CONNECTING ROD

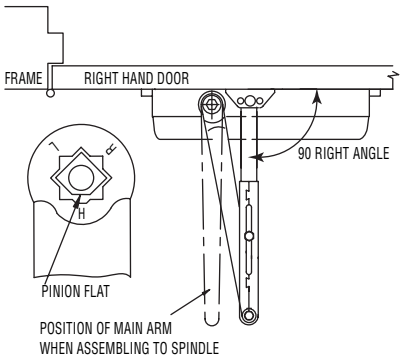

Slide connecting rod into forearm of main arm. Rot n down forearm screw.

6. OPTIONAL HOLD-OPEN ARM

Identify direction of hold-open nut according to hand of door and mount arm.

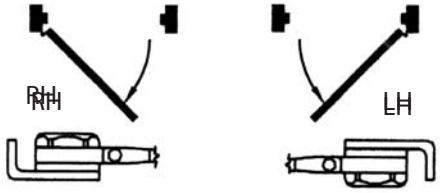

Adjust by loosening hold-open nut, then open door to desired position and tighten hold-open nut securely.

7. ADJUSTMENTS

See Adjustments on Page 6 for setting Spring Power, Sweep Speed, Latch Speed, and Backcheck.

NOTE: Do not fully unscrew valves or hydraulic fluid will leak and closer will no longer be functional.

8. INSTALL COVER

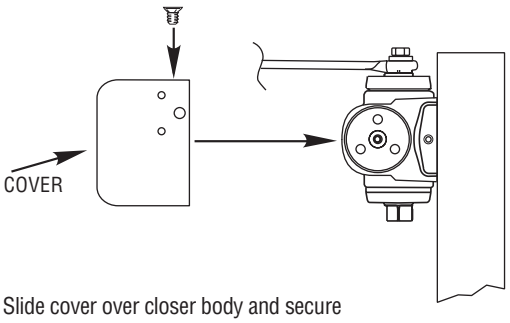

Slide cover over closer body and secure by tightening screws.

HAGER COMPANIES 139 Victor Street, St. Louis, MO 63104 • (800) 325-9995 • Fax (800) 782-0149

5200 Series Door Closer - Parallel Arm
Installation Instructions
Meets ANSI A156.4

1. PARTS

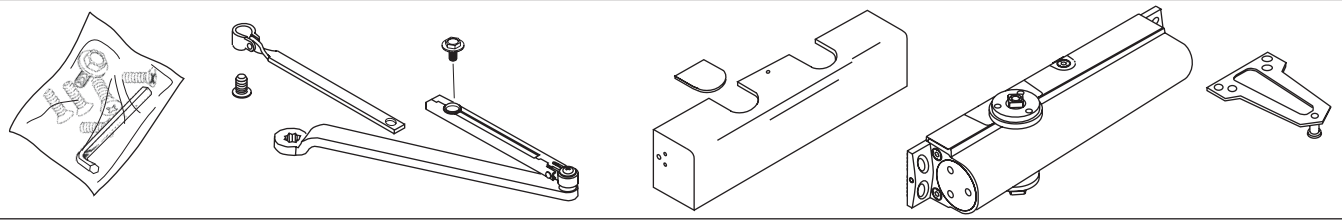

2. MARK AND DRILL HOLES (*Right Hand Shown*)

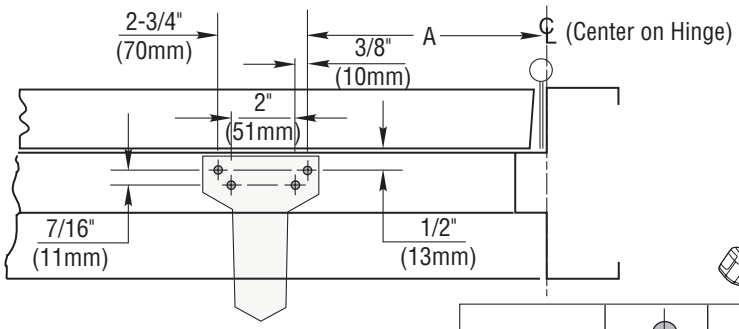

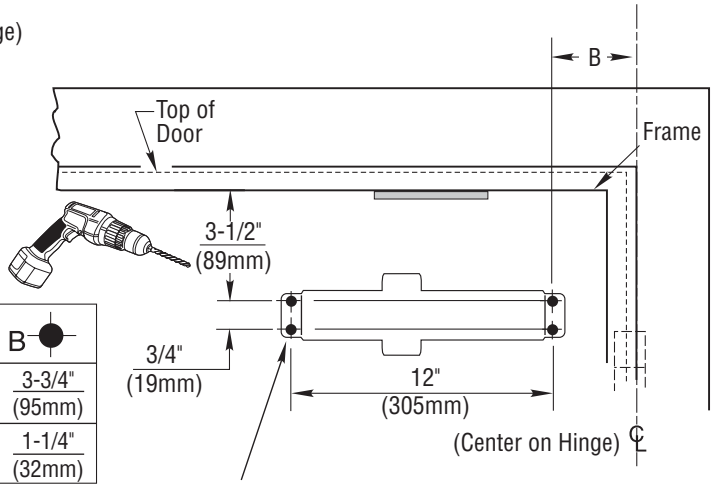

Select hand of door and the degree of door opening. Fold template on the corresponding line for desired degree and hand. Fold or cut upper corner illustrated on template and align template with the hinge edge of door. At the "Frame Stop Line" fold toward you and attach template to door. Mark, prep and drill/tap 1/4"-20 holes for closer body and parallel arm bracket mounting screws.

Door Opening	A	B
To 120	9-1/2" (241mm)	3-3/4" (95mm)
*121 to 180	7" (178mm)	1-1/4" (32mm)

*Door/Wall/Hardware/Jamb conditions permitting

Speed regulating valves toward lock stile.

3. INSTALL CLOSER

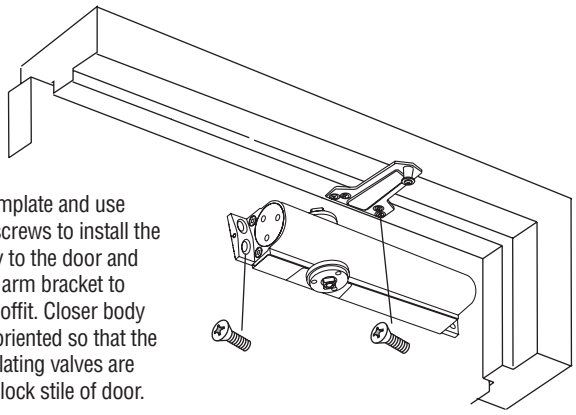

Remove template and use mounting screws to install the closer body to the door and the parallel arm bracket to the frame soffit. Closer body should be oriented so that the speed regulating valves are toward the lock stile of door.

4. INSTALL CONNECTING ROD

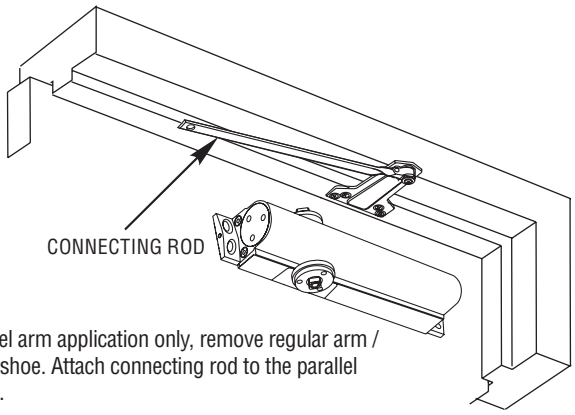

For parallel arm application only, remove regular arm / top jamb shoe. Attach connecting rod to the parallel arm plate.

5. INSTALL MAIN ARM

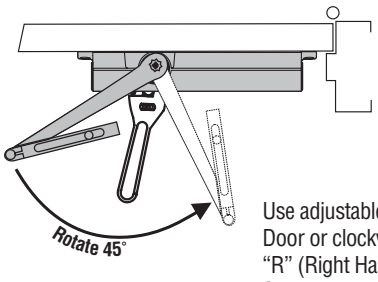

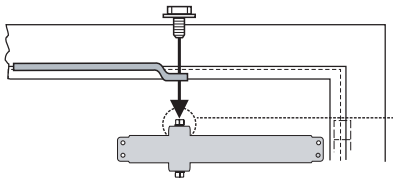

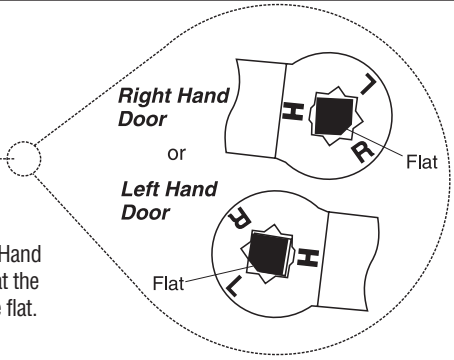

Use adjustable wrench to rotate spindle 45° counterclockwise for Right Hand Door or clockwise for Left Hand Door. Place main arm on spindle so that the "R" (Right Hand Door) or "L" (Left Hand Door) lines up with the spindle flat. Secure main arm and spindle by tightening spindle bolt.

HAGER COMPANIES 139 Victor Street, St. Louis, MO 63104 • (800) 325-9995 • Fax (800) 782-0149

6. INSTALL MAIN ARM AND CONNECTING ROD

a)

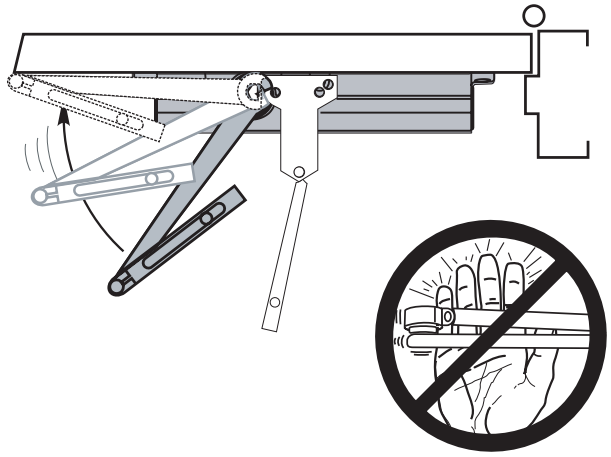

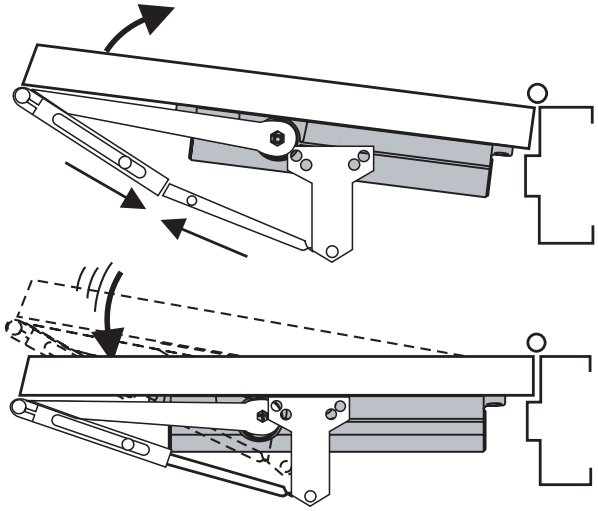

Slide connecting rod into forearm of main arm.

b)

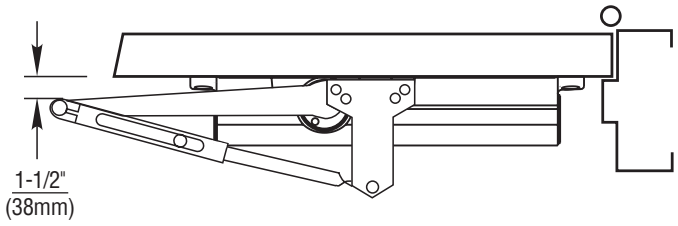

Rotate main arm until the pivot point is 1-1/2" from door surface.

c)

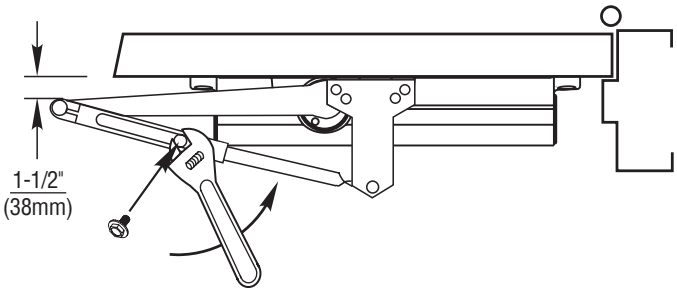

While holding arm in this position, tighten down forearm screw.

7. OPTIONAL HOLD-OPEN ARM

Identify direction of hold-open nut according to hand of door and mount arm.

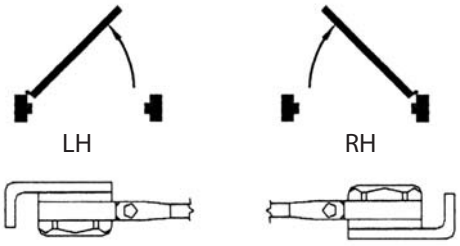

Adjust by loosening hold-open nut, then open door to desired position and tighten hold-open nut securely.

8. ADJUSTMENTS

See Adjustments on Page 6 for setting Spring Power, Sweep Speed, Latch Speed, and Backcheck.

NOTE: Do not fully unscrew valves or hydraulic fluid will leak and closer will no longer be functional.

9. INSTALL COVER

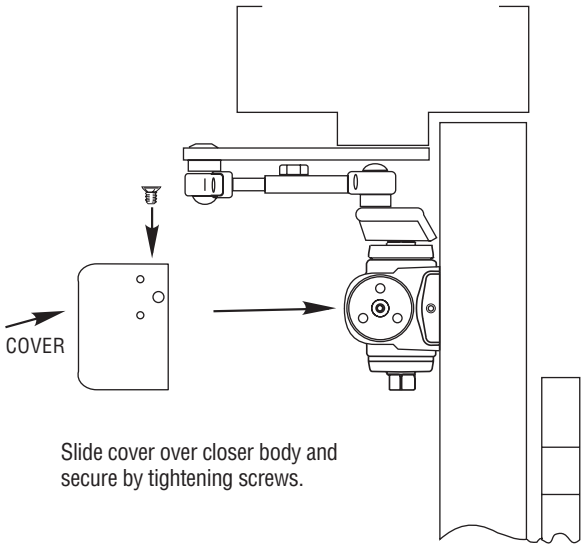

Slide cover over closer body and secure by tightening screws.

5200 Series Door Closer - Top Jamb Arm
Installation Instructions
Meets ANSI A156.4

1. PARTS

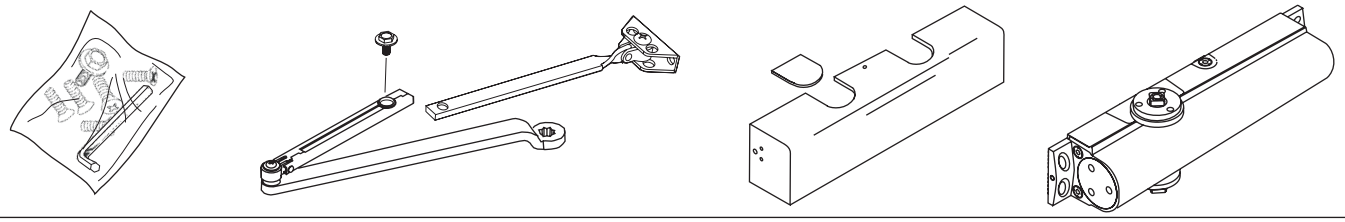

2. MARK AND DRILL HOLES (*Right Hand Shown*)

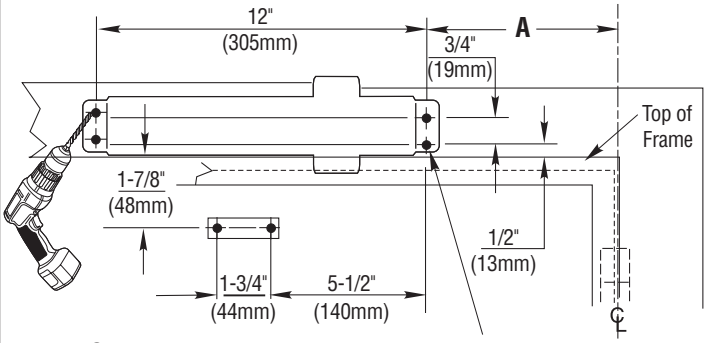

Speed regulating valves toward hinge edge.

Door Opening	Dimension "A"
To 100	7-1/2" (191mm)
101 to 130	6" (152mm)
131 to *180	4-1/2" (114mm)

*Door/Wall/Hardware/Jamb conditions permitting

A longer connecting rod is required for reveals greater than 4" (102mm)

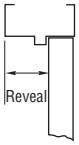

Select hand of door and the degree of door opening. Separate template sections "A" and "B". Fold template on the corresponding line for desired degree and hand. Match this line with the hinge edge of door and attach template to door. Be sure "Frame" line on template lines up with the top edge of door. Using a square, project "Closer Projection Line" on section "A" of template onto frame and use to align and attach section "B". Be sure to align bottom edge of section "B" with edge of frame. Mark, prep and drill/tap 1/4"-20 holes for connecting rod shoe and closer body mounting screws.

3. INSTALL CLOSER

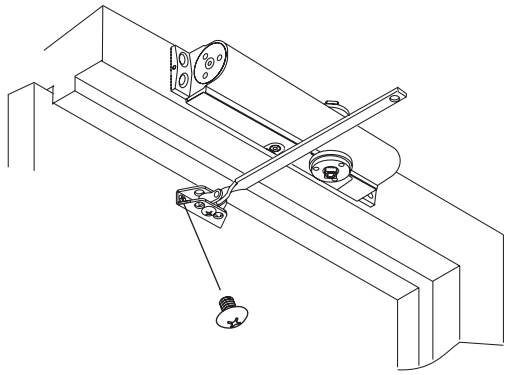

Remove template and use mounting screws to install the closer body to the top jamb and the connecting rod shoe to the door. Closer body should be oriented so that the speed regulating valves are toward the hinge stile of door.

4. INSTALL MAIN ARM

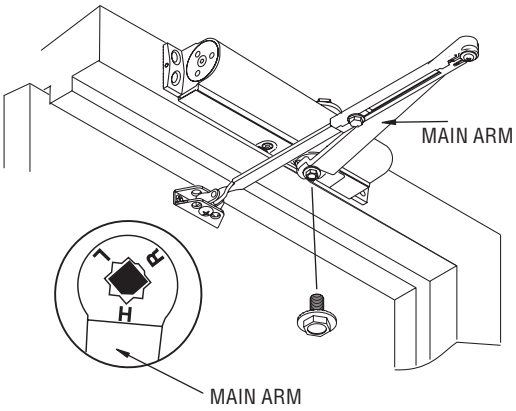

Orient main arm so that the "H", located on the main arm, lines up with the flat on the spindle. Press arm down on spindle and secure with spindle bolt.

5. INSTALL MAIN ARM AND CONNECTING ROD

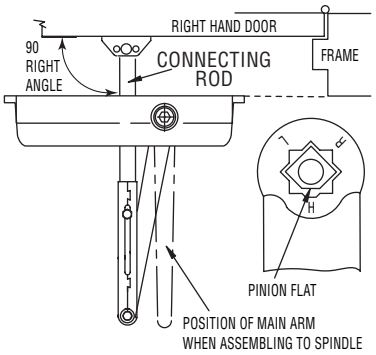

Slide connecting rod into forearm of main arm. Rotate main arm until connecting rod is at a 90˚ angle to frame. While holding arm in this position, tighten down forearm screw.

6. OPTIONAL HOLD-OPEN ARM

Identify direction of hold-open nut according to hand of door and mount arm.

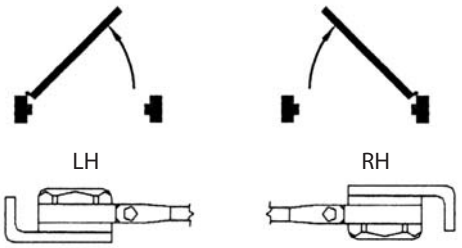

Adjust by loosening hold-open nut, then open door to desired position and tighten hold-open nut securely.

7. ADJUSTMENTS

See Adjustments on Page 6 for setting Spring Power, Sweep Speed, Latch Speed, and Backcheck.

NOTE: Do not fully unscrew valves or hydraulic fluid will leak and closer will no longer be functional.

8. INSTALL COVER

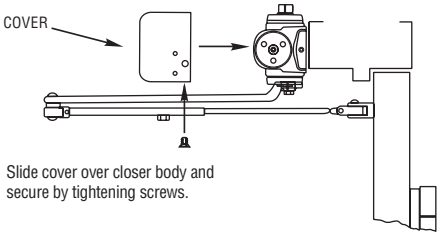

Slide cover over closer body and secure by tightening screws.

HAGER COMPANIES 139 Victor Street, St. Louis, MO 63104 • (800) 325-9995 • Fax (800) 782-0149

ADJUSTMENTS (USE 5/32" HEX WRENCH FOR THESE ADJUSTMENTS)

SWEEP SPEED

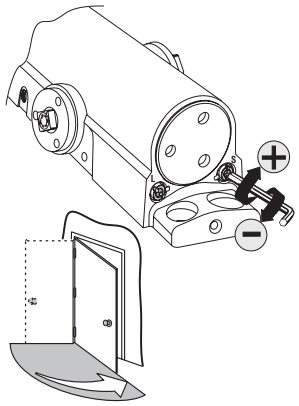

Note: Adjust closing time speed to between 3 and 7 seconds from 90˚ to 0˚. Greater closing times may be required for elderly or handicapped.

LATCH SPEED

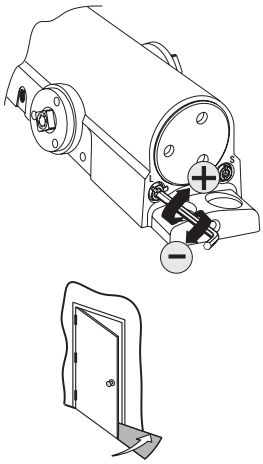

Adjust latch speed so door completely closes and latches.

BACKCHECK

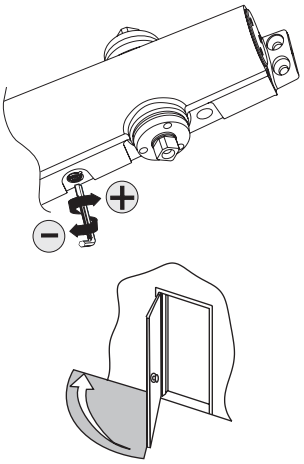

Adjust backcheck accordingly to prevent excessive opening speed.

OPTIONAL DELAY ACTION

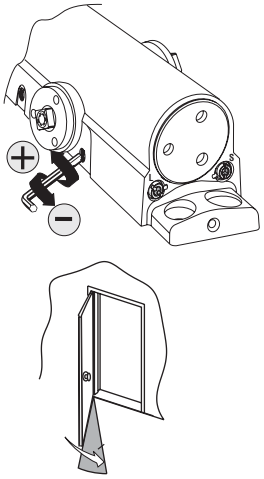

Adjust delay action accordingly to obtain desired delay time.

SPRING POWER ADJUST (Sizing in accordance to BHMA/ANSI 156.4)

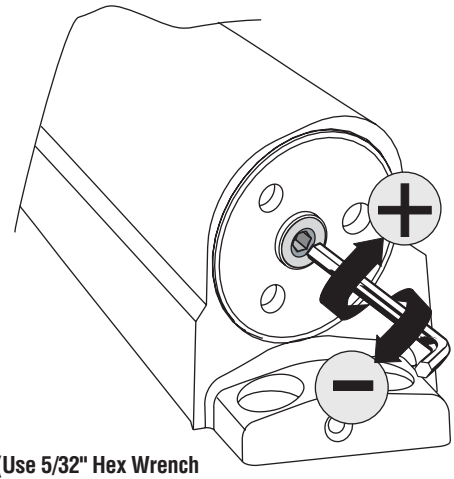

(Use 5/32" Hex Wrench for this adjustment)

TABLE OF SIZES

Closer is shipped set to size 3. To change the closer size, use a hex wrench to rotate the spring power adjust. Follow the chart to make the correct numbers of 360° turns to set the closer size appropriately for the door application.

The number of turns is an approximation and does not account for environmental or door hardware affects.

Approx. 5 turns to increase / decrease one size.

cw = clockwise
ccw = counterclockwise

Exterior (and Vestibule) Door Width

	Minimum Door Width (24")		
	24" (610mm) - 30" (762mm)	30" (762mm) - 36" (914mm)	36" (914mm) - 42" (1067mm)
Regular Arm & Top Jamb	Size 3 (0)	Size 4 (5cw)	Size 5 (10cw)
Parallel Arm	Size 3 (5cw)	Size 4 (10cw)	

Interior Door Width

	Minimum Door Width (24")				
	24" (610mm) - 30" (762mm)	30" (762mm) - 34" (865mm)	34" (865mm) - 38" (965mm)	38" (965mm) - 48" (1219mm)	48" (1219mm) - 54" (1372mm)
Regular Arm & Top Jamb	Size 1 (10ccw)	Size 2 (5ccw)	Size 3 (0)	Size 4 (5cw)	Size 5 (10cw)
Parallel Arm	Size 1 (5ccw)	Size 2 (0)	Size 3 (5cw)	Size 4 (10cw)	

ADJUSTMENT DIAGRAM

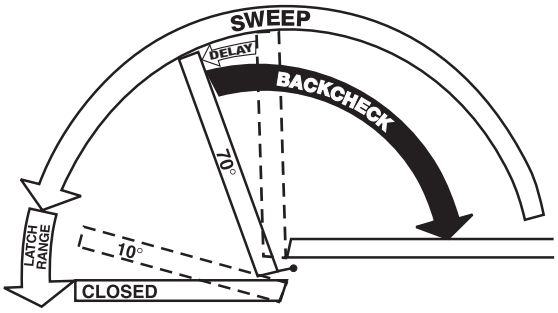

ARM PLACEMENT IN SHOE

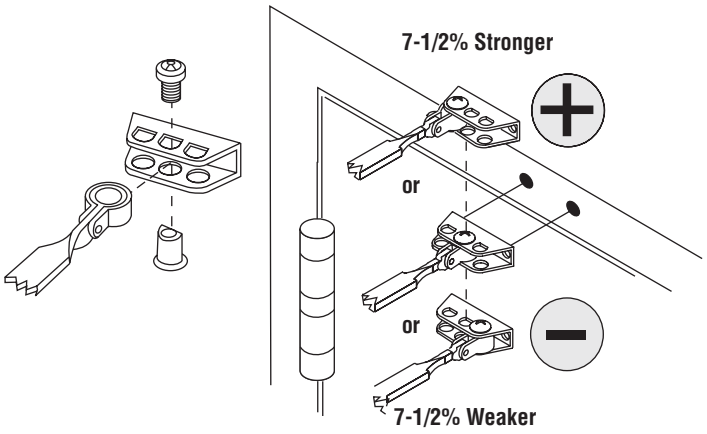

3500 Series Lever

Grade 2 Cylindrical Lever

Applications:

- Standard duty commercial
- No exposed mounting screws
- Non-handed
- Conventional cylinder or Small Format Interchangeable Core housing available

Notes:

- Blank plate projection is 13/16" (21 mm) for Functions 25 and 79
- Interchangeable Cores are not available on Apollo knob

PRODUCT SPECIFICATIONS

CERTIFICATIONS:
- BHMA Certified ANSI A156.2, Series 4000, Grade 2
- ADA Compliant ANSI A117.1 Accessibility Code
- UL/cUL Listed for all functions up to 3 hours "A" label single doors (for double doors application, UL/cUL Listed when used with 3/4" latchbolt)
- ANSI A250.13 Severe Windstorm Component
- UL10C Positive Pressure Rated
- UL10B Neutral Pressure Rated
- Lifetime warranty

EXPOSED TRIM:
- Knobs: wrought brass or stainless steel
- Levers: cast zinc
- Rose: wrought brass or stainless steel

LOCK CHASSIS:
- Heavy gauge steel, zinc dichromated for corrosion resistance
- Free wheeling (levers only)
- Removable thru-bolts
- Failure to install thru-bolts and removable screw posts voids BHMA certification, UL Rating, and Warranty.

ROSE DIAMETER:
- 3-11/32" (85 mm) levers; 3" (76 mm) knobs

KEYS:
- Two operating keys supplied per lock

CYLINDERS:
- Brass - Keyed Different
- C Keyway
- Other keying options, including keyed 6-pin, available from the factory
- Interchangeable Core
- Brass 6 & 7 pin
- Uncombinated & Combinated
- Drilled 6-pin, Keyed 5-pin
- Standard
- Small Format Interchangeable Core housing available
- SFIC uncombinated or combinated, brass 6- or 7-pin sold separately

DOOR THICKNESS:
- Levers: 1-3/8" - 2" (35 mm - 51 mm)
- Knobs: 1-3/8" - 1-3/4" (35 mm - 54 mm)

BACKSET:
- 2-3/4" (70 mm)
- Standard - 2-3/8" (60 mm)
- Optional - 3-3/4" (94 mm)
- Optional - 5" (128 mm)

LATCHBOLT:
- 1/2" (13 mm) Throw
- Stainless steel
- 1-1/8" x 2-1/4" (25 mm x 57 mm) Faceplate for 2-3/4" (70 mm) backset
- Deadlocking latchbolt prevents manipulation when door is closed; keyed functions only
- 1" x 2-1/4" (25 mm x 57 mm) Faceplate for 2-3/8" (60 mm) backset

STRIKES:
- 3935 ASA 1-1/4" x 4-7/8" (32 mm x 124 mm) strike
- Standard

FINISHES:
- US3, US4, US10, US10B, US26, US26D (Levers only)
- US3, US32D (Knobs only)

FUNCTIONS:
- 10 - Passage, 17 - Dummy, 25 - Exit, 27 - BTB Dummy, 40 - Privacy, 50 - Office, 53 - Entry, 70 - Classroom, 73 - Corridor, 79 - Keyed Communicating, 80 - Storeroom

OPTIONS:
- Lead Lined (Levers Only)
- Tactile Knurling (Levers Only)
- Split Finish
- Additional latchbolts and strikes available

STANDARD DOOR PREP:
- 2-1/8" diameter (cross bore)
- Latch hole: 1" diameter (edge bore)

LEVER OPTIONS:
- Apollo knob; Archer, August, Withnell levers

3500 Series ANSI Grade 2 Lever Set
Installation Instructions
Meets ANSI 156.2
I-LS00768

For use on doors 1-3/8” to 2” (35 mm - 51 mm) thick

TOOLS REQUIRED FOR NEW INSTALLATION:
(1) Phillips Head Screwdriver
(1) 2-1/8” (54 mm) Hole Saw
(1) 1” (25.4 mm) Drill Bit
(1) 5/16” (8 mm) Drill Bit
(1) Chisel
(1) Catch-Release Tool (Provided)

TOOLS REQUIRED FOR REPLACEMENT INSTALLATION:
(1) Phillips Head Screwdriver

FOR REMODELING OR NEW CONSTRUCTION:
-Follow all steps

FOR REPLACEMENT OF EXISTING LOCK:
-Follow steps 3C, 4C, 5 through 9 after removal of old lock

FOR CYLINDER REPLACEMENT:
-Follow Step 10

NOTE:
Failure to install thru-bolts and removable screw posts voids BHMA certification, UL rating, and warranty.

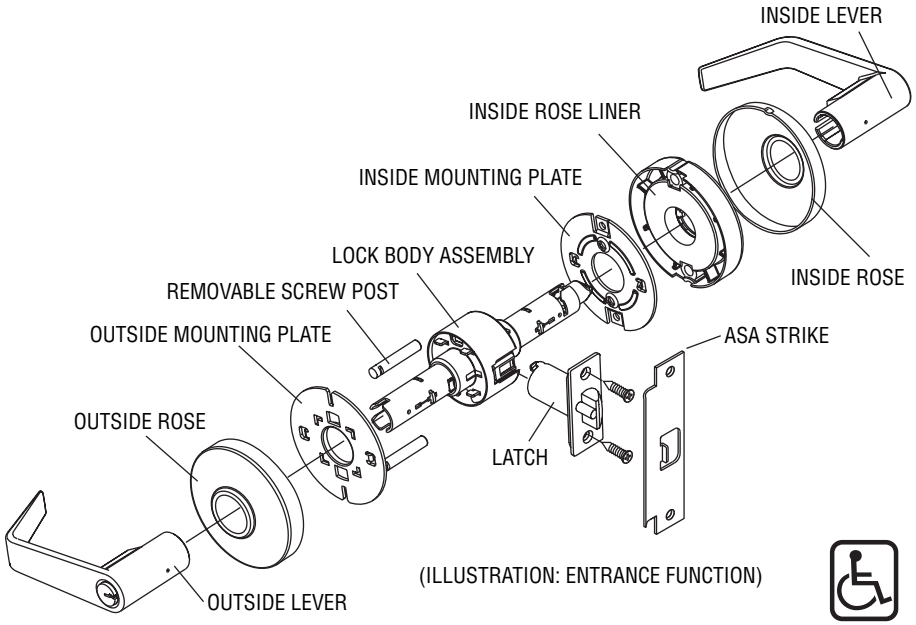

(ILLUSTRATION: ENTRANCE FUNCTION)

1. MARK DOOR

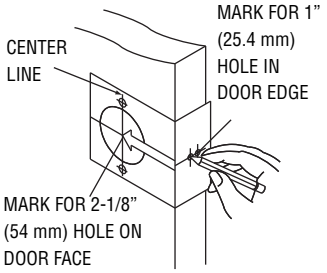

Measure center line of lock; height as desired from finished floor. Select 2-3/4” or optional 2-3/8” backset, fold and apply template to high side of door bevel and mark center of door edge as indicated on template. Mark center hole and screw-post holes on door face through guide on template.

2. DRILL HOLES

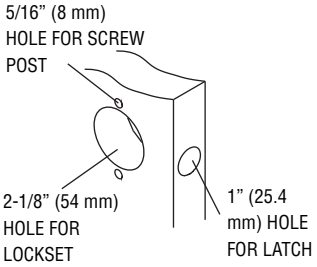

Drill 2-1/8” (54 mm) hole through door face as marked for lockset. (It is recommended that holes be drilled from both sides on wood doors to prevent splitting.) Drill 5/16” (8 mm) holes for screw-posts. Drill 1” (25.4 mm) hole in center of door edge for latch.

3. INSTALL LATCH

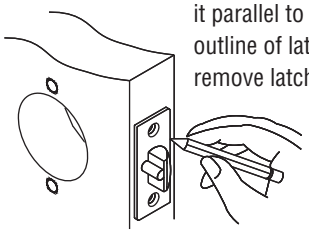

A. Insert latch in hole keeping it parallel to face of door. Mark outline of latch face plate and remove latch.

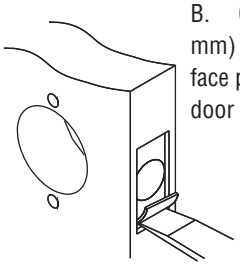

B. Chisel 5/32” (4 mm) deep or until latch face plate is flush with door edge.

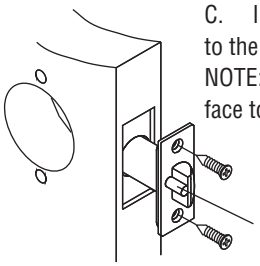

C. Insert latch and tighten to the door using #8 screws. NOTE: Latchbolt bevel must face to closing direction.

4. INSTALL STRIKE

A. Close door until latchbolt touches jamb. Locate strike in jamb and center line of strike. Open door and extend line to door stop. Measure one half of door thickness plus 1/8” from door stop. Vertically mark center line for strike.

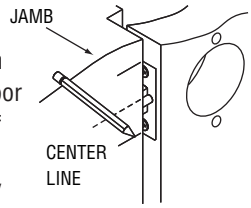

B Drill two (2) 1” (25.4 mm) holes 3/4” (19 mm) deep in door jambs 5/16” (8 mm) above and 5/16“ (8 mm) below horizontal center line. CAUTION: To ensure proper lockset function, hole in jamb must be drilled a full 3/4” (19 mm) deep.

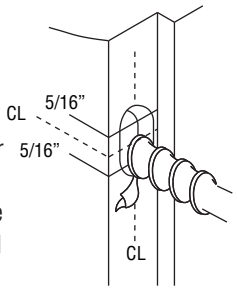

C. Cut out jamb mortise for strike 3/32” (2.4 mm) deep or until strike is flush with jamb. Tighten screws. Latch stops against strike, as illustrated.

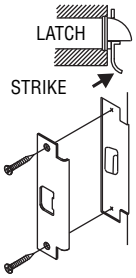

5. REMOVE INSIDE TRIM

Use catch release tool to depress lever catch visible under hole of inside lever shank and slide off inside lever, rose, rose liner, and mounting plate.

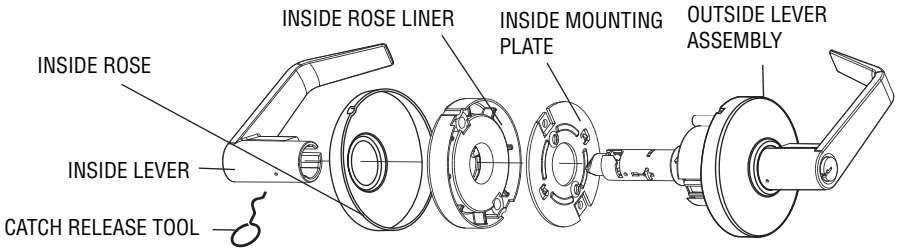

6. ADJUST DOOR THICKNESS

A. Outside mounting plate is pre-set for 1-3/4" door thickness. To fit different door thicknesses, remove outside lever, rose, and rose liner. Now adjust the outside mounting plate by rotating plate until tip of catch release tool lines up with desired door thickness indicated on lock body assembly.

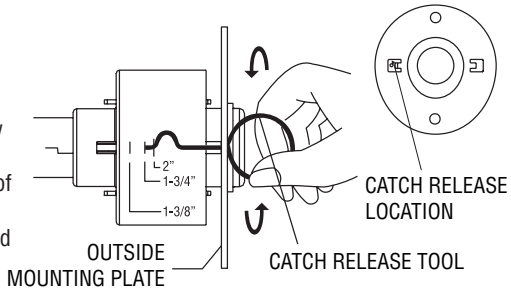

B. Install removable screw post into slots on outside mounting plate. Install rose liner and align rose liner arrow in the direction of the lock stile. Install outside rose and lever onto lock body assembly.

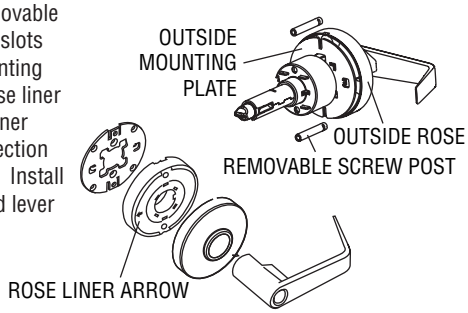

7. INSTALL OUTSIDE LEVER ASSEMBLY

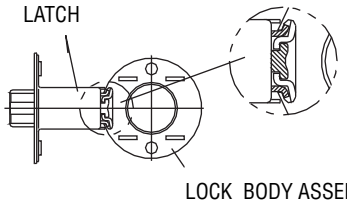

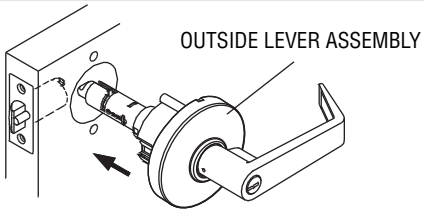

Install outside lever assembly on the door. Make sure tail of latch engages with retractor correctly as illustrated.

8. INSTALL INSIDE MOUNTING PLATE AND ROSE LINER

A. Install mounting plate tight to door face and tighten screws securely to the lockbody using interior mounting holes.

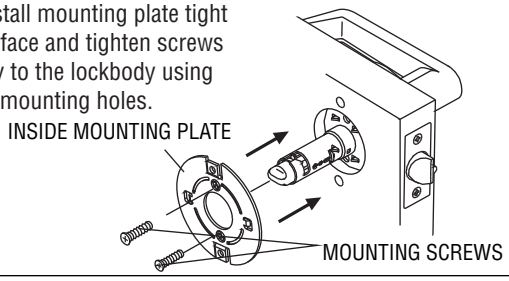

B. Install inside rose liner and align rose liner arrow in the direction of the lock stile. Tighten rose liner to the thru posts using mounting screws.

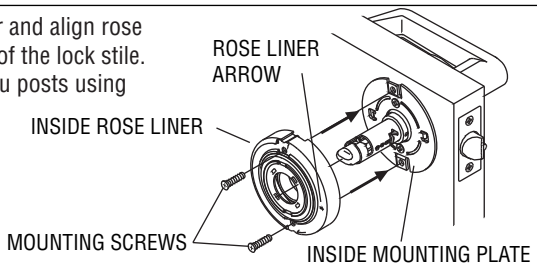

9. INSTALL INSIDE ROSE AND LEVER

A. Align indent on inside rose with groove on inside rose liner. Press inside rose onto inside rose liner and rotate clockwise to fully seat inside rose.

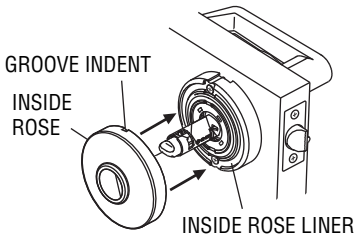

B. Push lever all the way in until it clicks into catch hole.

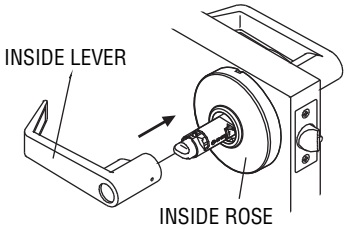

10. REPLACE CYLINDER (SKIP THIS STEP IF INSTALLING 3510 OR 3540)

A. Turn key clockwise 1/4 turn.

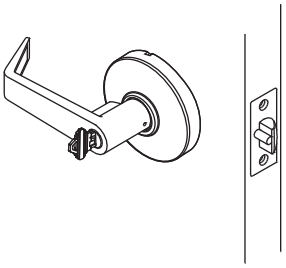

B. Using catch release tool, press the lever catch and pull the lever off.

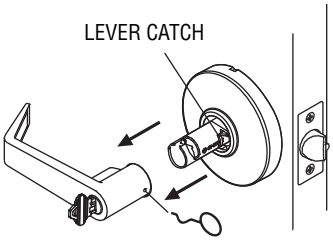

3.03 FIXTURES

Data sheets to follow.

ROMTEC

POLYETHYLENE TOILET RISER

Description

The Romtec Toilet Riser is a single piece molded fixture for use in vault toilets. It can be installed in any new or existing vault toilet facility. The smooth polyethylene material cleans easily, will not support bacterial growth, is impervious to chemicals and resists vandalism. The toilet riser is supplied with a heavy-duty, high impact polypropylene seat and lid with mounting hardware.

Specifications

	ASTM Test	Nom. Value
Density	D-1505-85	0.938 g/cm3
Tensile strength at yield	D-638-84	2,575 psi
Elongation at break	D-638-84	400%
Tensile modulus of elasticity	D-638-84	80,000 psi
Flexural modulus	D-790	100,000 psi
Heat deflection temp @ 66psi	D-648	138 deg. F
Vicat softening temp	D-1525	248 deg. F
Impact Brittleness Temp	D-746-79	<-180 deg.
Dart Impact (-40 deg C)	ARM Std. (B)	60 ft-lb. 125mil
Envir. stress crack resistance	D-1693-70	> 1,000 HRS.

- Patented Design: US Patent No. 5983415
- Materials: Polyethylene, White
- Riser Dimensions:

  Overall: 18” high, 5” flange, 20-5/8” x 16 ½” oval

  Avg. thickness of material: 1/8”

  Weight: 23 lbs, including seat and lid

- Stainless Steel Safety Riser Bar sold separately unless purchased through Romtec building package.

LAVATORY FIXTURE - 5683

Item: 8443

Unit may be pictured with some optional features.

☑ **5683** High Abuse Lavatory

STANDARD FEATURES

- **Wall mounted fixture, wall outlet waste.**
- **Lavatory basin-**
  - Rectangular lavatory basin.
  - 1 5/8" (41mm) dia. die formed drain opening.
- Integral ribbed soap tray.
- 4" (102mm) high back splash.
- Deck punched for faucets as required.

► DESCRIPTION

This Lavatory is designed for public areas requiring a durable and vandal resistant fixture. The lavatory is fabricated using heavy gauge type 304 stainless steel seamlessly welded to form a one piece, vandal resistant unit. The lavatory is designed with an integral ribbed soap dish and a 4" (102mm) high backsplash. Exposed surfaces have a satin finish. Valves and other trim must be specified separately.

► PERFORMANCE STANDARDS

This fixture meets or exceeds ASME A112.19.3 / CSA B45.4 standards for "Stainless Steel Plumbing Fixtures".

Listed by

QAI Quality Auditing Institute ® C US

► INSTALLATION

The lavatory is designed for installation on a finished wall using a hanger bracket and bolt holes on back of the fixture. Wall anchors and anchor bolts are not furnished. Piping must be roughed out of wall for connection to lavatory waste and lavatory valve supplies.

Hole Punchings

- ☐ **Single Hole** On Center.
- ☐ **4" Centerset** Two Holes.
- ☑ **4" Centerset** Three Holes. (Standard)
- ☐ **8" Centerset** Two Holes.

Hand Basins

- ☑ **RB** Rectangular Basin. (Standard)

Drains

- ☐ **ND** No Drain. (Die Formed Drain Opening 1-1/4")
- ☐ **A261** Grid Drain with elbow.
- ☐ **A270** Grid drain with Tailpiece.
- ☐ **SJP** Slip Joint P-trap.

Options/Accessories

- ☑ **OF** Overflow Vent.
- ☑ **A775** Angle braces. (Standard)
- ☐ **A780** Waste enclosures.
- ☐ **PCC** Powder Coat - Anti-microbial White.
- ☐ **A168** Metal Template.

Deck Mounted Faucets

- ☐ **A306** Faucet with Gooseneck.
- ☐ **A307** Faucet blade style handles.

Note: To mount lavatory in accordance with "ADA" requirements the rim height must be mounted at 34" (864mm) above finished floor.

LAVATORY FIXTURE - 5683

Item: 8443

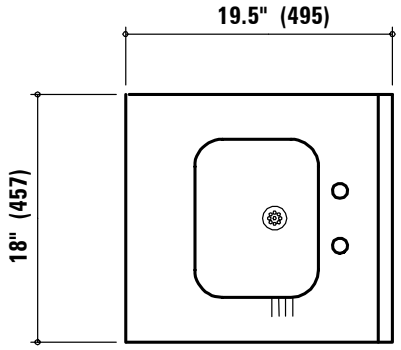

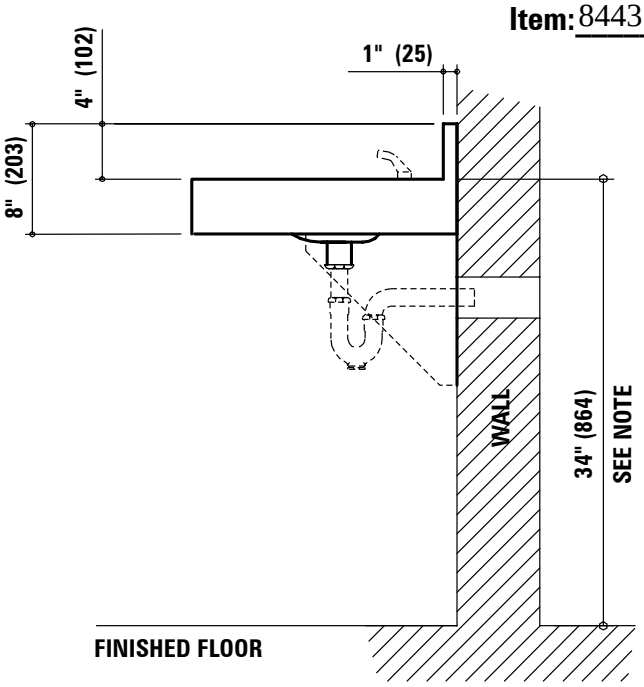

Due to continuous product improvement Metcraft reserves the right to make changes in design and specifications without prior notice. All dimensions should be verified with the factory for current information.

APPROVED FOR MANUFACTURING	Company:_____ Name:_____
	Signature:_____ Date:_____

ITEM: 8443

LAVATORY FIXTURE - 5683

1. Z-clip wall bracket with 5/16" (8) Dia. holes.
2. Wall anchor locations. (4)
3. Optional cantilever braces.

ADA
COMPLIANT

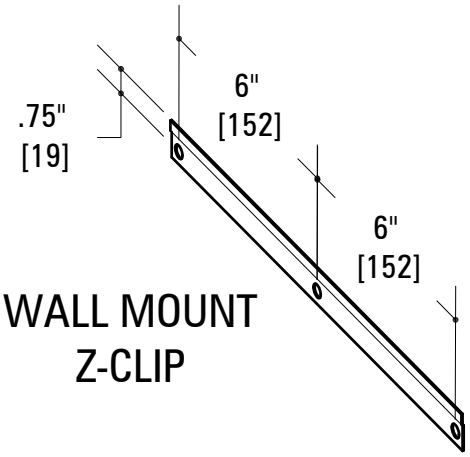

WALL MOUNT
Z-CLIP

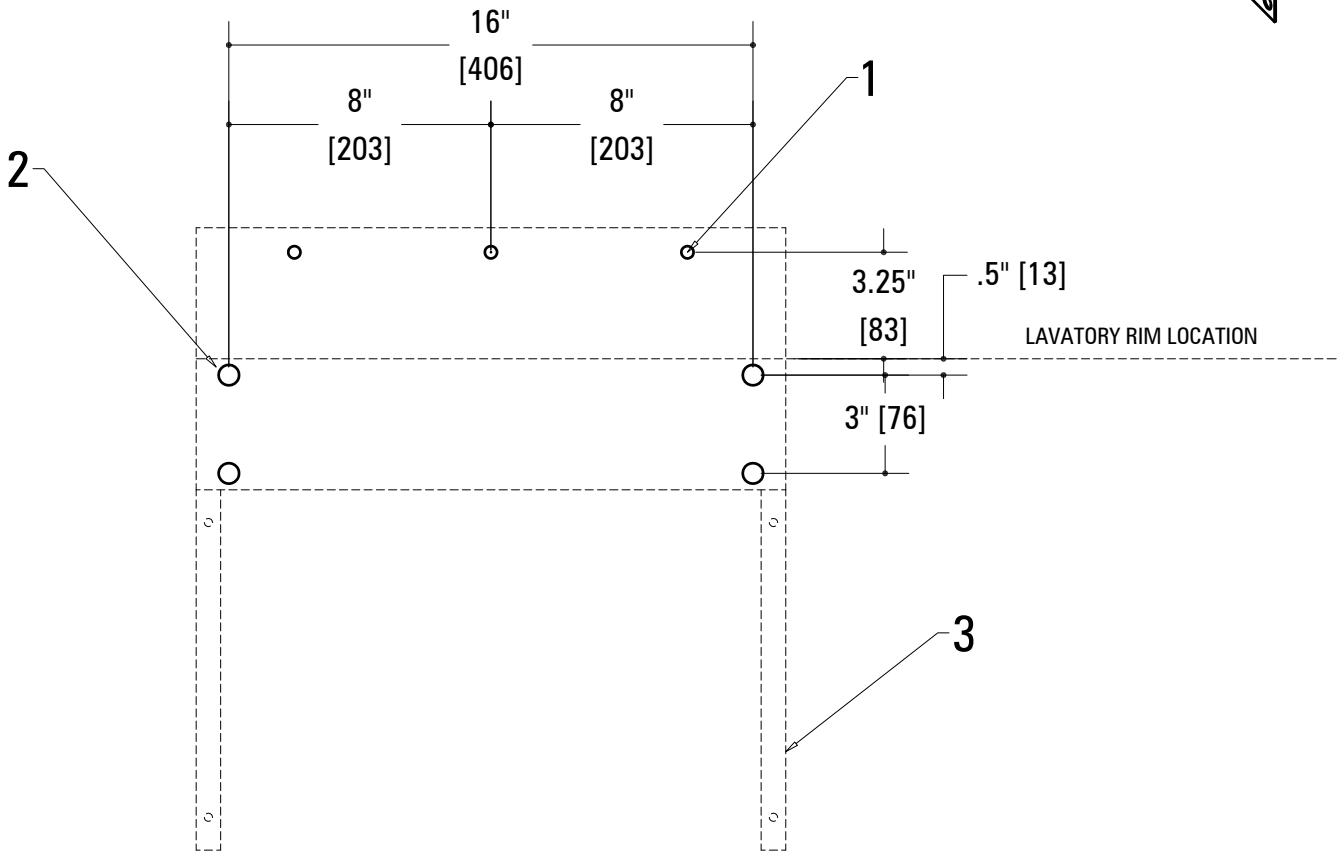

HOLES FOR CORE DRILLING OR STEEL PLATE WALLS

Metcraft®
Industries, Inc.

301 S.E. Thompson Drive
Lee's Summit, MO 64082

Phone: 816-554-0300
Fax: 816-554-0307

www.metcraftindustries.com
sales@metcraftindustries.com

Stainless Steel Plumbing Fixtures

Claims, Shortages, and Returns
Fixture Installation
Care and Cleaning
Valve Installation
Valve Trouble Shooting

STAINLESS STEEL PLUMBING FIXTURES

Metcraft stainless steel plumbing fixtures set the industry standards for safe and reliable operation under the specialized conditions such as prisons, jails and public use environments. The following special features enhance safety and security.

*Integrally welded heavy gauge stainless steel construction.
*Smooth exposed edges
*Special tamper resistant fasteners which resist unauthorized disassembly.
*Toilet fixtures are reinforced to withstand load stress of 3000 lbs without permanent damage.
*For maximum security, Metcraft recommends the use of optional security frame.

Metcraft®

301 SE Thompson Drive, Lee's Summit, MO 64082
Phone: 816.554.0300 **Fax**: 816.554.0307
www.metcraftindustries.com
sales@metcraftindustries.com

Claims, Shortages, and Returns

Claims and Shortages

The Buyer must file all claims for losses and damages in shipment; however, Metcraft will, if requested in writing, file such claims if Buyer has complied with all of the following within 5 working days after receipt of shipment:

1. Inspects shipment immediately upon receipt.
2. Have shipment inspected by delivering carrier for losses & damages.
3. Files inspection report with carrier and sends copy to factory.

All claims for shortages must be reported in writing to Metcraft within 14 days of shipment.

All claims for failure to receive shipment must be reported in writing to Metcraft within 30 days of invoice date.

Return of Goods

All items are manufactured per specification. The return of any goods is based on Metcraft's discretion. No goods shall be returned without written return materials authorization (R.M.A.) from factory. Requests for R.M.A.'s must be made within 60 days of shipment. To receive an R.M.A., the Buyer must supply the invoice number and date. Terms of the return are listed on Metcraft's R.M.A. when it is issued.

Warranties

Goods manufactured by Metcraft are warranted to be free from defects in workmanship and material for a period of one year from date of shipment. Metcraft must receive written notice from buyer of any defects promptly after discovery and within a one year period. Within a reasonable time after such notification, Metcraft will, at its sole option, repair or replace defective parts. This is the Buyer's exclusive remedy for breach of warranty. Metcraft will under no circumstances be responsible for consequential, incidental or special damages based upon breach of warranty, breach of contract, negligence, strict tort or any other legal theory. The statute of limitation within which any claims can be filed against Metcraft is one year

THE FOREGOING WARRANTY IS IN LIEU OF ALL OTHER WARRANTIES, EXPRESS OR IMPLIED, INCLUDING BUT NOT LIMITED TO THE IMPLIED WARRANTIES OF MERCHANTABILITY, TITLE AND FITNESS FOR A PARTICULAR PURPOSE

The failure of Metcraft to insist upon the strict performance of the terms and conditions of sale shall not constitute or be construed as a waiver or relinquishment of Metcraft's rights thereafter to enforce any such term or condition or any other term or condition. Metcraft's order verification shall be construed under and governed by the Missouri Uniform Commercial Code and such laws of the state of Missouri as may be applicable.

NO AGENT OR REPRESENTATIVE OF METCRAFT IS AUTHORIZED TO MAKE ANY EXCEPTIONS TO THESE TERMS AND CONDITIONS OF SALE. IF LEGAL ACTION IS NECESSARY TO ENFORCE ANY OF THESE TERMS AND CONDITIONS OF SALE, THE CUSTOMER WILL BE RESPONSIBLE FOR ANY COURT COSTS AND REASONABLE ATTORNEY'S FEES.

Metcraft®

301 SE Thompson Drive, Lee's Summit, MO 64082
Phone: 816.554.0300 **Fax**: 816.554.0307
www.metcraftindustries.com
sales@metcraftindustries.com

Fixture Installation

At the time of installation, check to make sure frame is square and has not been damaged in shipment. If the frame is out of square, mounting holes will not match fixture anchor locations.

Locate rough-in position on wall. If a Metcraft security frame is to be incorporated, cast the frame in place or block in place by conventional construction methods.

1. Rough-in all plumbing connections required by fixture.

2. Attach backsplash trim, all through wall plumbing connections and seal.

3. Attach anchor rods to fixture. Unit is now ready for final positioning.

ISOMETRIC VIEW - FIXTURE COMPONENTS

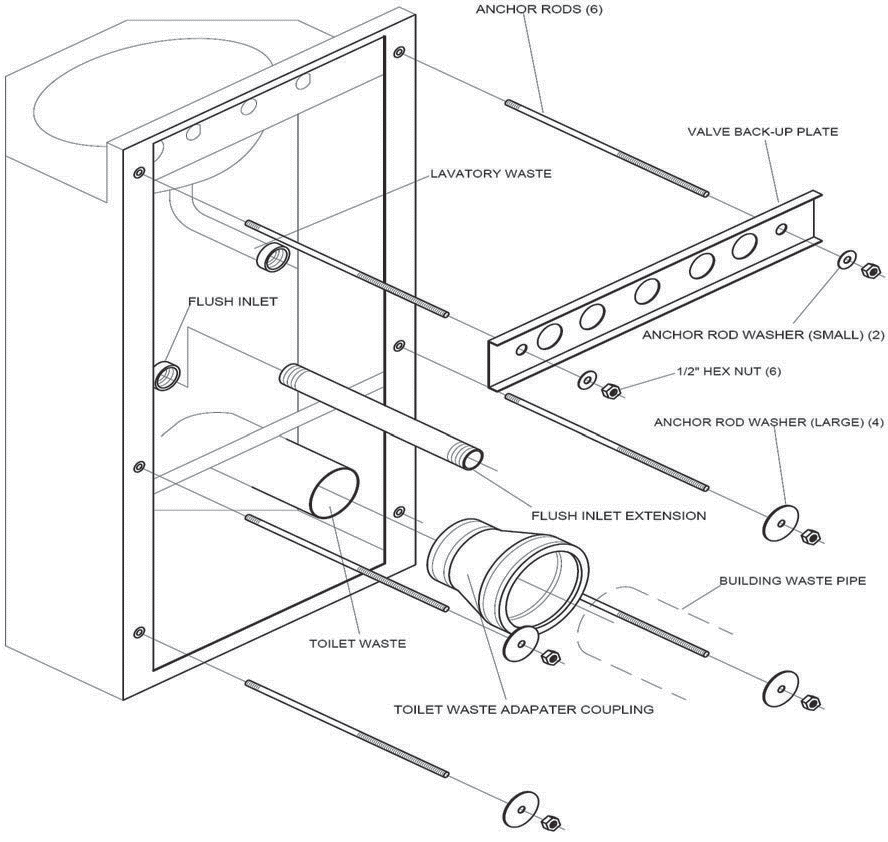

Metcraft®

301 SE Thompson Drive, Lee's Summit, MO 64082
Phone: 816.554.0300 **Fax**: 816.554.0307
www.metcraftindustries.com
sales@metcraftindustries.com

General Care and Cleaning

During Construction

The installing contractor must take care, during the construction phase, to care for the stainless steel plumbing fixtures. **Lack of care during the construction can cause the fixtures to rust.** The following is care that should be taken during the construction process.

- Routine cleaning, to remove residue from your stainless steel fixtures, should be performed every month.
  - Clean with ordinary soap and water.
    - Apply with a cloth or sponge
    - Rinse thoroughly and wipe dry
    - Apply a thin film of stainless steel cleaner and wipe dry.
  - For tougher stains, residues and deposits.
    - Use a Scotch-Brite™ scouring pad along with a stainless steel cleaner to remove tough stains, residues, and deposits. Never use common steel wool or wire brush as they will cause surface stains and rusting.
    - Rinse thoroughly and wipe dry
    - Apply a thin film of stainless steel cleaner and wipe dry.
- After installation, clean, dry & cover fixture to protect from soiling by work from other trades. **If contamination of the stainless steel surface occurs, then clean immediately as described above.**

Contamination of Stainless Steel Fixtures

Any of the following are considered a contaminant for stainless steel fixtures and will cause rusting and/or deterioration of these fixtures:

- **Construction Contaminations**
  - Weld Splatter, Metal Shavings, Cleaning Acids & Concrete Dust
- **Chemical Contaminations**
  - Chlorine, Muriatic Acid, Sulphuric Acid, Hydrochloric Acid, Iodine
- **Environmental Contaminations**
  - Sea Salt & Humidity is very caustic to stainless steel and requires more frequent care and cleaning to prevent these fixtures from rusting.
  - Standing Water & Organic Matter
  - Never let standing water or organic matter accumulate in the toilet for over a week.
- **Never allow bleach to stand in the toilet bowl. This is a typical practice we see to disinfect the toilet bowl during long periods where the toilet is inactive. This practice causes the bleach to attack the toilet bowl and destroy the fixture.**

Metcraft®

301 SE Thompson Drive, Lee's Summit, MO 64082
Phone: 816.554.0300 **Fax**: 816.554.0307
www.metcraftindustries.com
sales@metcraftindustries.com

After Construction

- After construction, the cleaning staff should be trained on the proper care and cleaning of these stainless steel fixtures. Routine cleaning, to remove residue from your stainless steel fixtures should be performed every month.
    - Clean with ordinary soap and water.
        - Apply with a cloth or sponge
        - Rinse thoroughly and wipe dry
        - Apply a thin film of stainless steel cleaner and wipe dry.
    - For tougher stains, residues and deposits.
        - Use a Scotch-Brite™ scouring pad along with a stainless steel cleaner to remove tough stains, residues, and deposits.
        - Rinse thoroughly and wipe dry
        - Apply a thin film of stainless steel cleaner and wipe dry.
- **Never allow bleach to stand in the toilet bowl. This is a typical practice we see to disinfect the toilet bowl during long periods where the toilet is inactive. This practice causes the bleach to attack the toilet bowl and destroy the fixture.**

Metcraft®

301 SE Thompson Drive, Lee's Summit, MO 64082
Phone: 816.554.0300 **Fax**: 816.554.0307
www.metcraftindustries.com
sales@metcraftindustries.com

A300 PNEUMATIC VALVE GENERAL GUIDELINES

For specific valve applications, Metcraft provides supplemental information with each shipment. Please refer to these sheets for answers to specific questions on individual valves. In general, Metcraft fixtures are designed to operate under these general guidelines.

1. All fixtures require water pressure of at least 35 PSI flowing. Recommended maximum pressure 75 PSI.
2. Flow controls of showers are preset to 2.5 gallons per minute or less.
3. Flow controls of lavatories are preset to .5 gallons per minute.
4. Flush all standing water from lines prior to attachment of valve to water supply. Do not leave highly chlorinated water in valves or severe damage will occur. Long periods of dormancy can adversely affect valves. The water should be removed from valves during such dormant periods.

For best results from Metcraft A300 Pneumatic Valves, reasonable water quality standards must be maintained. High levels of minerals and sediments in water supply will have detrimental effects on function of these valves.

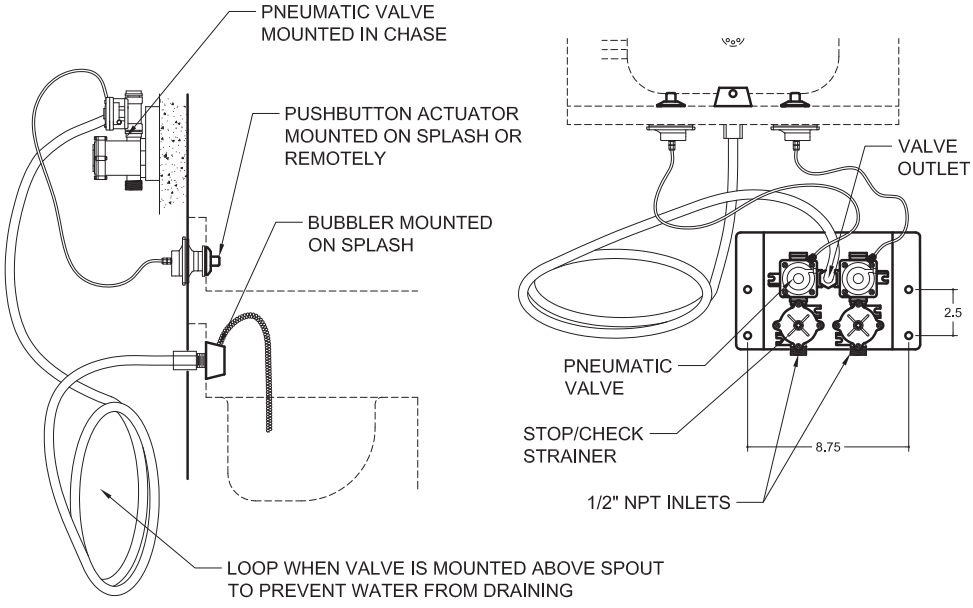

Metcraft®

301 SE Thompson Drive, Lee's Summit, MO 64082
Phone: 816.554.0300 **Fax**: 816.554.0307
www.metcraftindustries.com
sales@metcraftindustries.com

A300 SERIES PNEUMATIC VALVE INSTALLATION INSTRUCTIONS

1. Flush all supply lines thoroughly.

2. Make sure polyethylene tubing is clear of any debris or water. DO NOT use kinked tubing.

3. Assemble push buttons and bubbler spout and mount to fixture backsplash before securing the to the wall. Install bubbler inlet fitting to the bubbler inlet.

4. Mount the valve and bracket assembly to the wall. Choose a location where future access for service and adjustment of the valve will be convenient, bearing in mind that the valve must be located within 7 feet of the push button operators and bubbler outlet.

5. DO NOT use pipe thread compounds or sealants on any threads connecting to the valves, valve operators and tubing nuts. Thread sealants are not intended for these connections and may contribute to valve damage or malfunctions and thereby void warranty.

6. Connect 1/2" od polyethylene tubing to the bubbler head and the valve outlet. Loop tubing below spout to prevent water draining from spout. Compression connections should be only tightened 1/4 to 1/2 turn pashand tight. Over-tightening with a wrench may cause damage. Make sure tubing is fully inserted into socket before tightening.

7. Connect 1/8" od tubing to push button diaphragm assemblies and to brass barb connection on the side of the valve operator closest to the timing adjustment. Make sure tubing is fully inserted in socket on valve operator end before tightening small plastic nut.
   *Small nut should be finger tightened only. Do not use a wrench on these nuts.

8. Open supply stop(s) and check the valve connections for leaks.

9. Actuate push buttons several times to clear air from the valves and tubing. Check water tubing at valve and bubbler for possible leaks again.

10. Adjust timed cycle of valves as needed, following the instructions given below.

The timing cycle can be adjusted using the timing adjustment located next to the 1/8" air tube connection on the side of the valve operator. Some valves have a small screwdriver slot on the end of the adjuster. Timing clockwise lengthens the cycle; counter-clockwise shortens the cycle. Adjustments should be made in small increments to achieve best results. As the cycle is lengthened, adjustments become increasingly sensitive. Timed cycles in excess of 1 minute require infinitely small adjustments.

Metcraft®

301 SE Thompson Drive, Lee's Summit, MO 64082
Phone: 816.554.0300 **Fax**: 816.554.0307
www.metcraftindustries.com
sales@metcraftindustries.com

VALVE TROUBLE SHOOTING

Symptom: Valve Will Not Shut Off.

1. Remove 1/8" air tube beside timer. If the valve shuts off after a short time, turn the timer adjustment counter-clockwise several turns. Re-connect the tubing making sure the connection is sealed properly (tubing should not slip or come off if tugged gently). Re-adjust timer for desired cycle time. If the valve still refuses to shut off proceed to step 2.
2. Turn off water to valve. Remove the valve top by removing the (4) screws securing it. Note the position of the tube connector and timer so the valve top can be properly re-assembled in the same position. Remove valve operator exposing the water chamber of the valve. Check the rubber diaphragm assembly for possible debris. Check the diaphragm to be sure the rubber is properly seated into the plastic post. Check the hole through the plastic post to be sure it's free of debris. Turn the diaphragm assembly over and find the small circle near the edge of the rubber. There is a small hole in the middle of the circle that should be free of debris. Rinse the assembly with clean water to remove any debris. Also, rinse the orifice plate and the separator cup in the valve top, making sure the small spring in the separator cup (above the orifice plate) is not dropped or lost. If any part of the diaphragm is damaged, replace the entire diaphragm assembly using part #16426 (PVK-2 diaphragm kit). Clean any debris from the valve base and the valve seat before re-assembling. Re-assemble the valve and adjust the timing to desired cycle length.

Symptom: Valve Will Not Open.

1. Make sure the water supply is turned on.
2. Remove the 1/8" plastic tubing from the back of the pushbutton diaphragm and suck on the end. If water flows, the valve is operating properly but there is an air leak in the tubing connections, the tubing or the pushbutton diaphragm. Also, it is possible that the timer has been opened (turned counter-clockwise) so far the vacuum can not be held. Close the timer (turn clockwise) to see if the valve will operate. If yes, adjust timing for desired cycle.
3. Check the flow control orifice located in the valve outlet fitting to be sure it is not blocked by debris. If blocked, clear debris by blowing air through it from the tubing end of the fitting. Do not force any tools through the orifice as this may damage or distort it and cause improper operation.
4. Check the pushbutton actuator diaphragm for leakage by removing the diaphragm from the back of the pushbutton and from the air tubing. While holding your finger over the end of the tubing connection to seat it, push the rubber diaphragm toward

301 SE Thompson Drive, Lee's Summit, MO 64082
Phone: 816.554.0300 **Fax**: 816.554.0307
www.metcraftindustries.com
sales@metcraftindustries.com

the back using your finger in place of the pushbutton. If the tubing fitting is sealed properly with your finger, the rubber diaphragm should be held back away from the front of the diaphragm housing. If it returns to the front of the housing, it is not holding a vacuum and must be replaced. This test should be repeated several times before deciding the diaphragm must be replaced as it is difficult to hold your finger over the hole in the tube fitting to properly seal it.

Symptom: Valve Will Only Run A Short Time And Does Not Respond To Timer Adjustment.

This is one of the most common complaints. In most cases, this is a result of an air leak in the air tubing connections either at the pushbutton end or the valve end of the tubing. If the tubing is connected using a white plastic nut, gently give the tubing a quick tug. If it comes out of the fitting, re-insert it, making certain it "bottoms out" in the fitting. Using gentle force, tighten the plastic nut one-quarter turn. Repeat as necessary until tubing is held tightly in place.

Some valve operators have a brass barb connection. No tubing nut is used on the operator.

It should be noted that the ends of the 1/8" tubing should be closely checked for splitting or cuts. Also, inspect the tubing to be sure there are no kinks or bends to prohibit air flow within the tubing. If the tubing is damaged or kinked, it must be replaced. The ends of the tubing should be cut square for best results.

Symptom: Bubbler Stream Overshoots The Lavatory Basin (Steady Stream).

1. Check the flow control fitting to be sure the flow restrictor is in place. The flow restrictor is normally located inside the fitting where the outlet supply tubing is connected to the valve. Penal spouts are designed for a rate of .5 gpm flow rate provided by this flow restrictor. Flow rate can not be adjusted adequately using the inlet stops on the valve.
2. Check the hole in the spout or bubbler for debris or blockage. The outlet hole of the bubbler must be clear of any obstruction or partial obstruction to form proper height arc. Clear any debris inside the bubbler head by disconnecting the supply tube from the fitting and blowing air back trough the bubbler. Do not use tools or probes through the hole on the bubbler as they may damage the finish or distort the hole, causing an erratic stream. Re-assemble the valve and adjust timing to desired cycle length.

Metcraft®

301 SE Thompson Drive, Lee's Summit, MO 64082
Phone: 816.554.0300 **Fax**: 816.554.0307
www.metcraftindustries.com
sales@metcraftindustries.com

Symptom: Bubbler Stream Does Not Form A High Enough Arc.

1. Check the flow control fitting for blockage. Clear any debris with air pressure or flushing with clean water. Do not use probes to clear blockage as this may cause damage to the flow restrictor.
2. Check plastic supply tubing for possible kinks that would restrict water flow.
3. Make sure inlet stops are open.
4. Turn off inlet stops and inspect strainer screens for blockage or mineral build-up. Use clean water to rinse away debris. If mineral build-up is severe on the screen, Use a commercial mineral solvent, (like calcisolve or limerase) to clean it. Thoroughly rinse the screen before re-installing it.

Important Valve Re-Assembly Note:
DO NOT tighten the four (4) screws that hold the valve top to the valve base any tighter than 18 inch pounds torque.

Metcraft®

301 SE Thompson Drive, Lee's Summit, MO 64082
Phone: 816.554.0300 **Fax**: 816.554.0307
www.metcraftindustries.com
sales@metcraftindustries.com

PF200 Series

Trap Covers

Product Features

- ADA & UFAS Compliant
- No tools required contractor friendly Tear-To-Fit feature makes trimming fast
- Universal design fits virtually all lavatory applications
- Smooth, flush SnapClip™ fasteners firmly secure piping covers in place and are nonabrassive and reusable
- Antimicrobial vinyl maintain sanitary conditions
- Lock Lid™ on valve stops tampering and allows service
- Cleanout nut cap allows service on trap without disassembly
- Internal ribs enhance K valve and soften impact cushioning
- Fire retardant

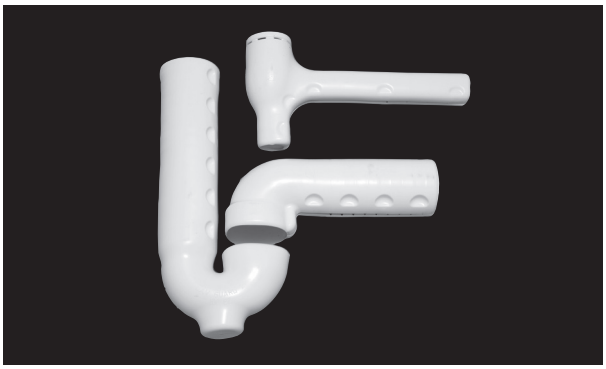

Model Numbers

PF200WH **PF202WH** **PF205WH** **PFEXT200WH**
PF201WH **PF203WH** **PF299WH**

Material	Soft, resilient molded vinyl
Nominal Wall	1/8” constant with internal ribs
Durometer	70-80 – Shore A
UV Protection	Will not fade or discolor
Durability	Virtually indestructible
Trimming	E-Z Tear-To-Fit trim feature (no tools needed)
Fasteners	Internal E-Z Grip fasteners, reusable
Color	China white
Compatibility	Fits all 1-1/4” or 1-1/2” cast brass or tubular P-trap assemblies and 3/8” or 1/2” angle stop assemblies
Paintability	Apply latex paint
Burning Characteristics ASTM D-635	Self extinguished 0 sec (ATB) mm (AEB)
Bacterial/Fungus Resistance	ASTM G21 and G22 – Result: 0 growth
Maintenance	Wipe clean using common detergents

New E-Z Tear-To-Fit feature and E-Z Grip built-in fasteners make installation fast and easy!

1. Tear-To-Fit on internal, dimensioned tear lines for quick, clean, accurate trimming to fit virtually any piping configuration. Covers flex to install over pipes.
2. Press seams together at finger recesses to engage E-Z Grip internal fasteners for a secure, safe, tamper-resistant installation. To remove cover, firmly pull seam apart using a strong grip. To reinstall, press seams back together.

Product Specifications

PF201WH

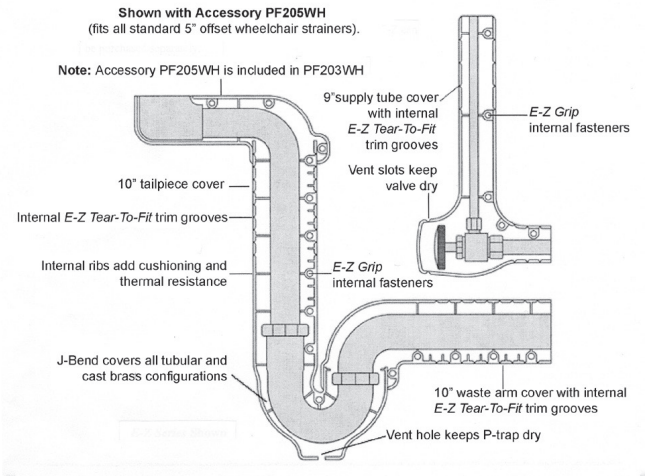

PF200WH	one P-trap cover
PF201WH	one P-trap cover, one angle valve and supply cover
PF202WH	one P-trap cover, two angle valves and supply covers
PF203WH	one P-trap cover, two angle valves and supply covers, one 5” offset tailpiece wheelchair strainer cover
PF299WH	one angle valve and supply cover
ACCESSORIES	
PF205WH	one 5” offset tailpiece wheelchair strainer assembly
EXTENSIONS	
PFEXT200WH	one 16” extension for drain waste or tailpiece

Warranty and Codes

This PROFLO product carries a 1-year limited warranty. This product meets ADA article 4.19.4; CABO/ANSI 4.20.4; UFAS 4.19.4; California Title 24; UPC/IAPMO ICC; Canada Barrier-Free Code. Made in USA.

Distributed Exclusively by Ferguson and Wolseley Canada

© 2015 Ferguson Enterprises, Inc.

PFGD101

Offset Lavatory Grid Drain

Product Features

- Heavy duty cast brass
- Chrome plated
- Open grid
- Offset wheelchair strainer
- 17 Gauge 1-1/4” x 6” tailpiece

PFGD101

Product Specifications

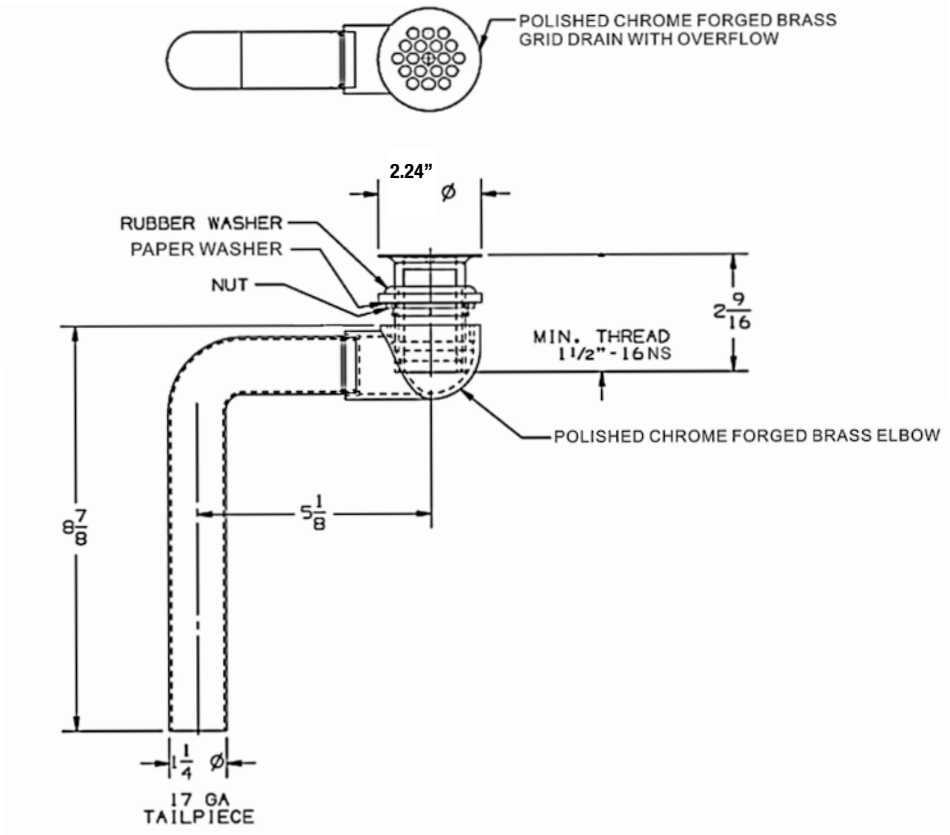

Warranty and Codes

This PROFLO product carries a 1-year limited warranty. This product meets ANSI: A112.18.2-2005/CSA B125.2-05.

Distributed Exclusively by Ferguson and Wolseley Canada

© 2011 Ferguson Enterprises, Inc. All Rights Reserved

Adjustable Tubular P-Traps

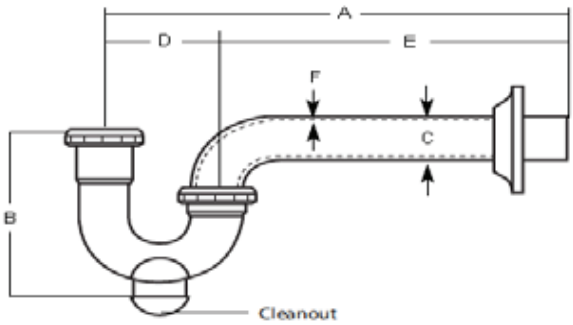

PFPTB100

✓ For Submittal	Model Number	Description	Cleanout Y/N	Dimensions										Gauge			
				A		B		C		D		E		F	Finish	Flange	Nuts
				in	mm	in	mm	in	mm	in	mm	in	mm				
→	PFPTB100	1-1/4 x 1-1/4	No	11	279.4	5	127.0	1-1/4	31.75	3	76.2	8	203	17	Chrome	Box	Brass
	PFPTB101	1-1/4 x 1-1/4	Yes	11	279.4	5 1/4	133.3	1-1/4	31.75	3	76.2	8	203	17	Chrome	Box	Brass
	PFPTB103	1-1/4 x 1-1/2	No	12 1/4	311.1	5 1/8	130.1	1 1/2	38.1	3 1/4	82.5	9	228.6	17	Chrome	Box	Brass
	PFPTB104	1-1/4 x 1-1/2	Yes	12 1/4	311.1	5 1/4	133.3	1 1/2	38.1	3 1/4	82.5	9	228.6	17	Chrome	Box	Brass
	PFPTB107	1-1/2 x 1-1/2	No	12 1/4	311.1	5 1/8	130.1	1 1/2	38.1	3 1/4	82.5	9	228.6	17	Chrome	Box	Brass
	PFPTB108	1-1/2 x 1-1/2	Yes	12 1/4	311.1	5 1/4	133.3	1 1/2	38.1	3 1/4	82.5	9	228.6	17	Chrome	Box	Brass
	PFPTB112	1-1/2 x 1-1/2	No	12 1/4	311.1	5 1/8	130.1	1 1/2	38.1	3 1/4	82.5	9	228.6	17	Chrome	Shallow	Brass
	PFPTB102	1-1/4 x 1-1/4 semi-cast	Yes	10 1/8	257.1	4 5/8	117.4	1-1/4	31.75	2 5/8	66.6	7 1/2	190.5	17	Chrome	Shallow	Zinc
	PFPTB106	1-1/4 x 1-1/2 semi-cast	Yes	10 3/8	263.5	5	127	1 1/2	38.1	2 7/8	73.0	7 1/2	190.5	17	Chrome	Shallow	Zinc
	PFPTB109	1-1/2 x 1-1/2 semi-cast	Yes	10 3/8	263.5	5	127	1 1/2	38.1	2 7/8	73.0	7 1/2	190.5	17	Chrome	Shallow	Zinc
	PFPTB110	1-1/2 x 1-1/2 w/ground joint	No	12 1/4	311.1	5 1/8	130.1	1 1/2	38.1	3 1/4	82.5	9	228.6	17	Chrome	Box	Brass
	PFPTB111	1-1/4 x 1-1/2 w/ground joint	No	12 1/4	311.1	5 1/8	130.1	1 1/2	38.1	3 1/4	82.5	9	228.6	17	Unfinished	Box	Brass
	PFPTB105	1-1/4 x 1-1/2 w/ground joint	No	10 3/4	273.0	5 1/8	130.1	1 1/2	38.1	3 1/4	82.5	7 1/2	190.5	17	Chrome	Shallow	Brass
	PFPTB400	1-1/4 x 1-1/4 w/cast body	Yes	11 1/8	282.5	4 5/8	117.4	1-1/4	31.75	2 5/8	66.6	8 1/2	215.9	17	Chrome	Box	Brass
	PFPTB401	1-1/2 x 1-1/4 w/cast body	Yes	11 7/8	301.6	5	127	1 1/2	38.1	2 7/8	73.0	9	228.6	17	Chrome	Box	Brass
	PFPTB402	1-1/2 x 1-1/4 w/cast body	No	11 7/8	301.6	4 7/8	123.8	1 1/2	38.1	2 7/8	73.0	9	228.6	17	Chrome	Box	Brass
	PFPTB403	1-1/2 x 1-1/2 w/cast body	Yes	11 7/8	301.6	5	127	1 1/2	38.1	2 7/8	73.0	9	228.6	17	Chrome	Box	Brass
	PFPTB404	1-1/2 x 1-1/2 w/cast body	No	11 7/8	301.6	4 7/8	123.8	1 1/2	38.1	2 7/8	73.0	9	228.6	17	Chrome	Box	Brass
	PFPTB200	1-1/4 x 1-1/4	No	11	279.4	5	127.0	1-1/4	31.75	3	76.2	8	203	20	Chrome	Box	Zinc
	PFPTB201	1-1/2 x 1-1/2	No	12 1/4	311.1	5 1/8	130.1	1 1/2	38.1	3 1/4	82.5	9	228.6	20	Chrome	Box	Zinc
	PFPTB202	1-1/2 x 1-1/2	No	12 1/4	311.1	5 1/8	130.1	1 1/2	38.1	3 1/4	82.5	9	228.6	20	Unfinished	Shallow	Brass
	PFPTB300	1-1/4 x 1-1/4	No	10	254.0	5	127.0	1-1/4	31.75	3	76.2	7	177.8	22	Chrome	Box	Zinc
	PFPTB301	1-1/2 x 1-1/2	No	12 1/4	311.1	5 1/8	130.1	1 1/2	38.1	3 1/4	82.5	9	228.6	22	Chrome	Box	Zinc

Warranty and Codes

This PROFLO product carries a 1-year limited warranty.

Distributed Exclusively by Ferguson and Wolseley Canada

© 2010 Fergusun Enterprises, Inc. All Rights Reserved

MVP FAUCETS

333-665PSHABCP

Manual and Metering Faucets

Product Type

Deck Mounted Single Hole Single Supply Metering Sink Faucet

Features & Specifications

- Single Hole
- 2.2 GPM (8.3 L/min) Aerator
- 1 3/4" Vandal Proof MVP Metering Push Handle
- MVP Metering Adjustable Cycle Time Closure Cartridge
- 1/2" NPSM Supply Inlet with Coupling Nut for 3/8" or 1/2" Flexible Riser
- 3 3/8" Center to Center Integral Cast Brass Spout
- ECAST® design provides durable brass construction with total lead content equal to or less than 0.25% by weighted average
- CFNow! Item Ships in 5 Days

Job Name _____

Item Number _____

Section/Tag _____

Model Specified _____

Architect _____

Engineer _____

Contractor _____

[ ] Submitted as Shown [ ] Submitted with Variations

Date _____

Performance Specification

- Rated Operating Pressure: 20-125 PSI
- Rated Operating Temperature: 40-140ºF

Warranty

- Lifetime Limited Faucet Warranty
- 5-Year Limited Cartridge Warranty
- 1-Year Limited Finish Warranty

Codes & Standards

- ASME A112.18.1/CSA B125.1
- Certified to NSF/ANSI 61, Section 9 by CSA
- California Health and Safety Code 116875 (AB1953-2006)
- Vermont Bill S.152
- NSF/ANSI 372 Low Lead Content
- ADA ANSI/ICC A117.1

ECAST

ECAST products are intended for installation where state laws and local codes mandate lead content levels or in any location where lead content is a concern.

2100 South Clearwater Drive
Des Plaines, IL
P: 847/803-5000
F: 847/803-5454
Technical: 800/TEC-TRUE
www.chicagofaucets.com

333-665PSHABCP

Manual and Metering Faucets

Architect/Engineer Specification

Chicago Faucets No. 333-665PSHABCP, Deck Mounted Single Hole Single Supply Metering Sink Faucet, Chrome Plated solid brass construction. 3 3/8" Center to Center Integral Cast Brass Spout. 2.2 GPM (8.3 L/min) Pressure Compensating Softflo Aerator. 1 3/4" Metal Vandal Proof MVP Metering Push handle(s) with Blue or Red Button. MVP™ self-closing, auto-timed metering cartridge, adjustable run time from 2 to 15 seconds, opens with push, 0.20 max gallon/cycle. 1/2" NPSM Supply Inlet with Coupling Nut for 3/8" or 1/2" Flexible Riser. ECAST® construction with less than 0.25% lead content by weighted average. Secondary Control Valve: 3 3/8" Center to Center Integral Cast Brass Spout. This product meets ADA ANSI/ICC A117.1 requirements and is tested and certified to industry standards: ASME A112.18.1/CSA B125.1, Certified to NSF/ANSI 61, Section 9 by CSA, California Health and Safety Code 116875 (AB1953-2006), Vermont Bill S.152, and NSF/ANSI 372 Low Lead Content.

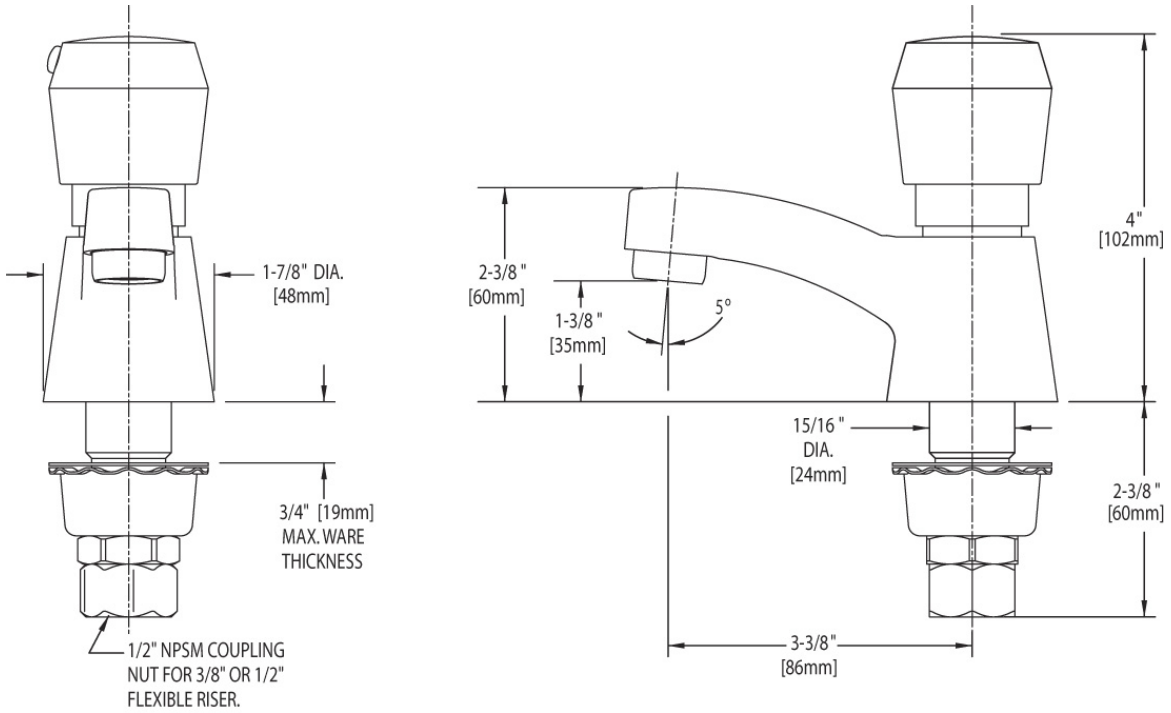

Operation and Maintenance

Installation should be in accordance with local plumbing codes. Flush all pipes thoroughly before installation. After installation, remove spout outlet or flow control and flush faucet thoroughly to clear any debris. Care should be taken when cleaning the product. Do not use abrasive cleaners, chemicals or solvents as they can result in surface damage. Use mild soap and warm water for cleaning and protecting the life of Chicago Faucet products. For specific operation and maintenance refer to the installation instructions and repair parts documents that are located at www.chicagofaucets.com.

Chicago Faucets, member of the Geberit Group, is the leading brand of commercial faucets and fittings in the United States, offering a complete range of products for schools, laboratories, hospitals, office buildings, food service, airports and sport facilities. Call 1.800.TECTRUE or 1.847.803.5000 Option 1 for installation or other technical assistance.

2100 South Clearwater Drive
Des Plaines, IL
P: 847/803-5000
F: 847/803-5454
Technical: 800/TEC-TRUE
www.chicagofaucets.com

Deck Mounted Faucets Installation Instructions

Recommended for base numbers 50, 50T, 51, 51T, 333, 335, 349, 350, 525, 526, 527, 700, 701, 730, 797, 802, 891, 894, 895, 929, 930, 931, 1100, 1102, 1891, 1895, and LWM Series Centerset and Single Basin Fittings, Pop-Up Drain Installation and Rigid/Swing Convertible Spout Installation.

CHICAGO FAUCETS
Geberit Group

Overview

Chicago Faucets deck mounted faucets feature cast brass bodies and precision cartridges for years of reliable operation. Metering models with adjustable cycle time offer true water savings.

Notice to the Installer

- Read this entire instruction sheet before installing to ensure proper installation.
- Installation must comply with local codes and ordinances.
- For fittings installed with pre-rinse or glass filler valves, check valves must be installed to prevent crossflow.

Pressurized plumbing fixtures shall be installed in accordance with manufacturer's recommendations. The supply piping to these devices shall be securely anchored to the building structure to prevent installed device from unnecessary movement when operated by the user. Care shall be exercised when installing the device to prevent marring the exposed surface.

NOTE: The information in this manual is subject to change without notice.

Please leave this manual with the facility manager after completing the faucet installation. This document contains information necessary for routine maintenance and servicing.

NOTE: Before installation, turn off water supplies to existing faucet and remove faucet if replacing. Clean faucet basin and clear away debris. Flush all supply lines before connecting to faucet. Failure to do so can result in debris clogging the inlets and/or cartridges.

Single Hole Mixing Fittings — Base numbers 50, 50T, 51, 51T

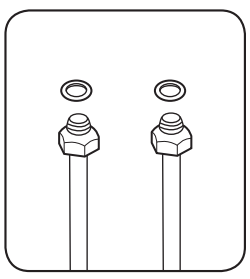

1. Ensure O-Rings are installed on hoses or tubes.

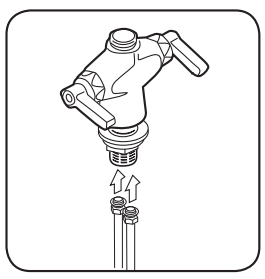

2. Install hoses or tubes.

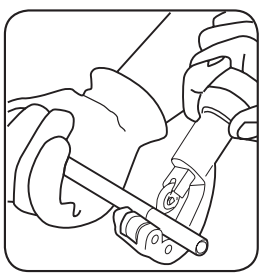

Copper Tube Installation
2b. Cut tubes to desired length.

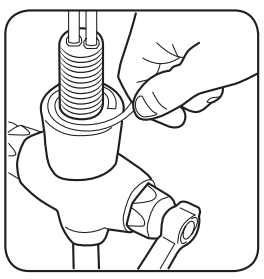

3. Apply putty to underside of faucet body to assure a good seal and level fit.

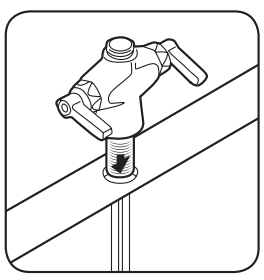

4. Place shank through hole in sink and assemble mounting hardware.

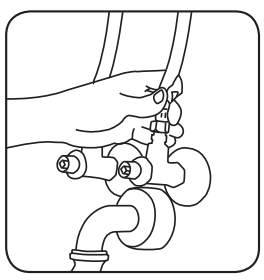

5. Attach hoses or tubes to supply stops. Make sure gasket is installed.

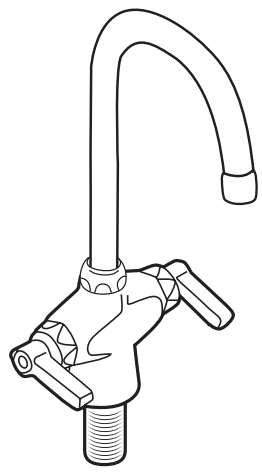

Mixing Tee Installation

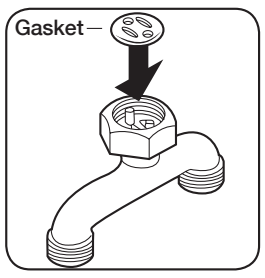

1. Install tee gasket over guide pins and secure coupling nut of tee to body shank.

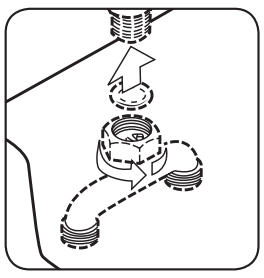

2. Secure coupling nut of tee to body shank. Tighten securely.

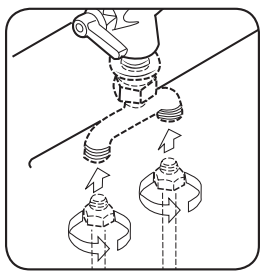

3. Attach supply lines with coupling nuts. Tighten securely.

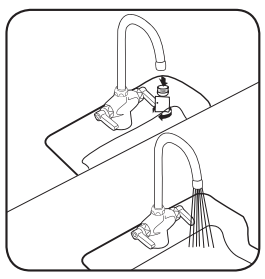

4. Remove outlet and flush lines for about one minute. Replace outlet.

Centerset and Single Basin Fittings — Base numbers 333, 335, 349, 350, 525, 526, 527, 700, 701, 730, 797, 802, 891, 894, 895, 1100, 1102, 1891, 1895

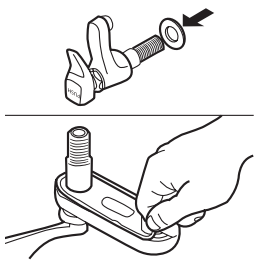

1. Apply putty or rubber washer to underside of faucet body to assure a good seal and level fit.

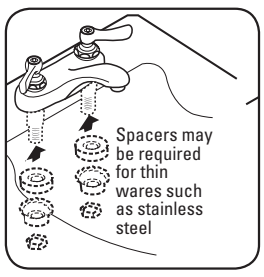

2. Place shank(s) through holes in sink and assemble mounting hardware. Use spacers if necessary.

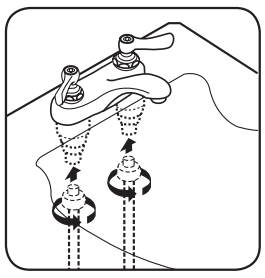

3. Attach supply lines with coupling nuts and tighten securely. Attach spout if provided separately.

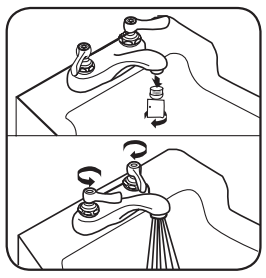

4. Remove outlet and flush lines for about one minute. Replace outlet.

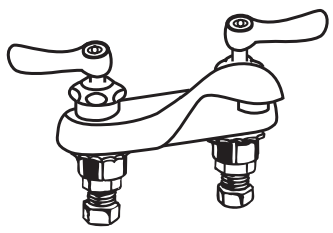

Pop-Up Drain Installation

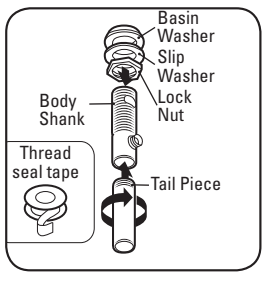

1. Assemble tail piece to body shank with thread seal tape. Assemble lock nut, slip washer, and basin washer to body shank.

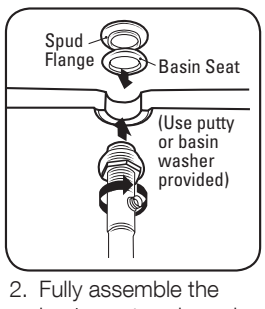

2. Fully assemble the basin seat and spud flange to body shank assembly.

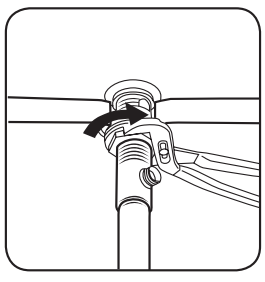

3. Position body shank toward the lift rod. Tighten lock nut until properly sealed.

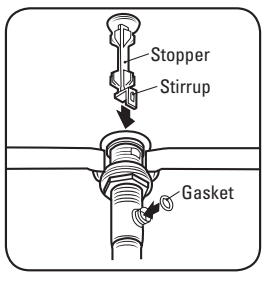

4. Place stopper into body shank cavity orienting the stirrup for removable or non-removable stopper as desired. (see #6)

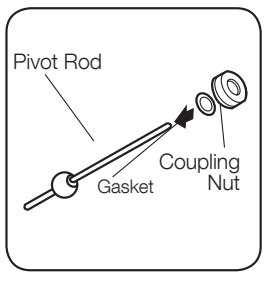

5. Insert pivot ball rod assembly through pivot rod gasket and coupling nut.

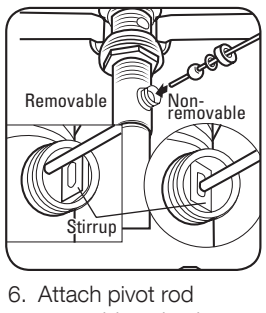

6. Attach pivot rod assembly to body shank.

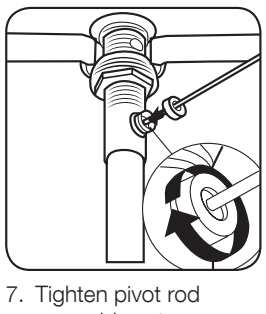

7. Tighten pivot rod assembly nut as required to seal and provide smooth operation.

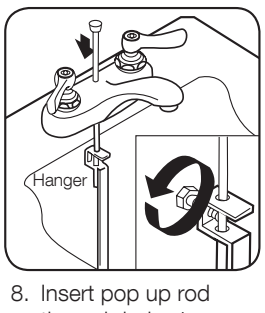

8. Insert pop up rod through holes in hanger and hand tighten.

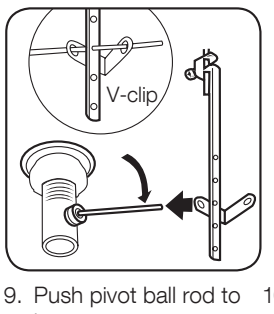

9. Push pivot ball rod to lowest position, squeeze v-clip and slide pivot ball rod through v-clip and appropriate hole in hanger.

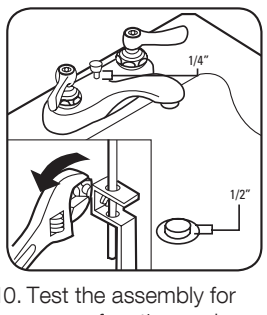

10. Test the assembly for proper function and make adjustments as necessary. Once set, tighten securely.

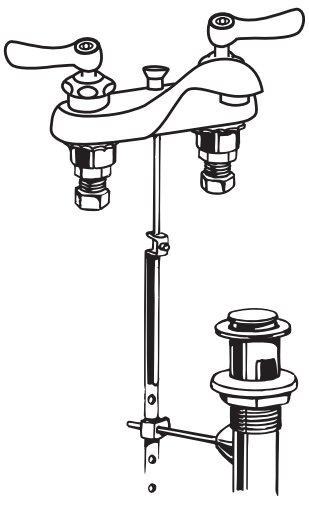

For additional technical assistance, call 800/TEC-TRUE (800-832-8783) or visit our website at chicagofaucets.com.

Deck Mounted Faucets Installation Instructions

(continued)

CHICAGO FAUCETS
Geberit Group

Rigid/Swing Convertible Spout Installation

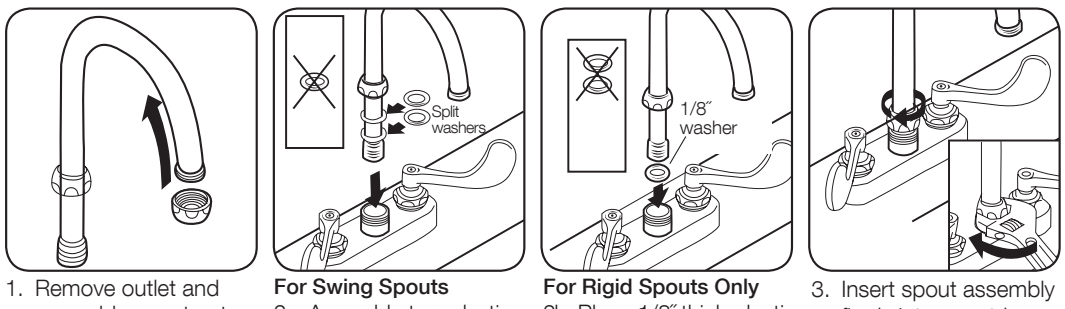

1. Remove outlet and assemble spout nut over outlet end, until it rests on shoulder of spout joint.

For Swing Spouts
2a. Assemble two plastic split washers to spout joint and discard 1/8″ thick plastic washer.

For Rigid Spouts Only
2b. Place 1/8″ thick plastic washer into spout base bore and discard plastic split washers.

3. Insert spout assembly firmly into spout base and tighten spout nut.

Chicago Faucets deck mounted faucets come with cartridges already installed. Instructions for adjusting the timing on metering cartridges are shown below. For complete instructions on servicing and replacing Chicago Faucets cartridges, see our Cartridge Maintenance/Repair Guide, available online at chicagofaucets.com/pdf/CF1081.pdf. You may also order a copy of the Guide by calling 800-832-8783.

RGD1 and RGD2 Only Spout Installation

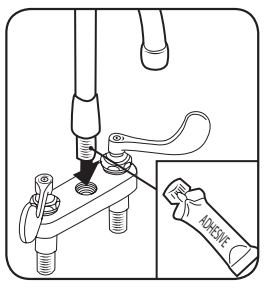

1. Apply Loctite 680 (provided), Permabond HH-040 anaerobic sealant, or equivalent NSF 61 approved sealant to threads of spout and tighten spout into base. Back off as necessary for centered position.

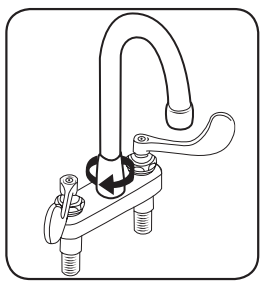

2. Hand tighten sleeve until flush with body.

Supplemental Bubbler Installation Instructions for 748-665CP, 748-665FHCP, 748-244CP and 748-244FHCP

Installation with Anti-Rotational Pins (Figure A)

1. Choose Two holes in bubbler base that corresponds with the deck/sink drilling and tap each anti-rotational pin with a hammer until seated. There should be approximately 1/8″ length of pin exposed when fully seated.
2. Drill 3/16″ diameter holes on 1-9/32″ centers and 1/4″ deep in the deck/sink for anti-rotational pins if mounting holes are not provided.
3. Attach Bubbler to deck using the anti-rotational washer provided.

Flow Adjustments (Figure B)

1. The projection of water flow can be adjusted by using the 1/8″ hex wrench provided. Insert hex wrench and rotate control clockwise or counterclockwise until the desired flow is achieved.

   Note: Bubblers have been designed to utilize the 722-013K inlet flow control.
   To insure proper performance, it is imperative that the 722-013K be installed with each bubbler.

Timing Adjustment on an MVP Metering Cartridge

1. With cartridge and handle installed in body and water supply turned on, purge cartridge of air by pushing handle completely down 4-8 times repeatedly, then check timing cycle.
2. To change cycle time, remove index button, then handle using a 3/32″ hex wrench. (Figure C)
3. Using your fingers, change height of adjustment nut by 1/4 turn only. Turn adjustment nut clockwise to increase cycle time or counter-clockwise to decrease cycle time. (Figure D)
4. If filter and lower valve cartridge have been removed from fitting, replace them by inserting filter first.
5. If gasket has been removed from the actuator assembly, replace it by inserting into bottom of actuator assembly.
6. Assemble actuator assembly to body and tighten to 12-15 ft-lbs torque.
7. Replace handle and verify desired cycle time. NOTE: TIMING MUST BE CHECKED WITH HANDLE IN PLACE.
8. If additional adjustment is necessary, repeat steps 3 through 7 until desired cycle time is achieved.
   Note: Some new installations might produce a slight closing noise. This is normally the result of air trapped in the cartridge. The noise will dissipate over time.
9. Attach handle and tighten set screw with a 3/32″ hex wrench. If index button is included, snap into handle.

Timing Adjustment on Push-Button (NAIAD) & Tip-Tap Self-Closing Cartridges

1. Turn off water supply.
2. Remove cartridge from valve body with 1-1/4″ flat hex wrench. Use care to prevent damage to cap hex nut.
3. Locate timing hex nut on bottom of dashpot. Turn hex nut clockwise to increase cycle time or counter-clockwise to decrease cycle time (Figure E). NOTE: Turn in 90 degree increments for each adjustment cycle. Fill the dashpot with water, slide it over the bottom of the cartridge, and place both back into the faucet body.
4. Place cartridge into faucet body and fully tighten cap nut with wrench to 15-25 ft-lbs torque. Turn on water and verify cycle time by depressing cartridge fully. NOTE: Insure that cap gasket is in place within cap before assembly into valve body.

   NOTE: Cartridges with 'SLO' designation include an external timing adjustment via a set screw in the top of the handle. Using a 7/64″ hex wrench, turn the set screw clockwise to decrease cycle time or counter-clockwise to increase cycle time. (Figure E)

Timing Adjustment on a Push-Tilt Self-Closing Cartridge

For Push-Tilt cartridges, the timing adjustment procedure is identical to Push-Button Self-Closing Cartridges, except for an external timing adjustment feature that is integral to Push-Tilt handles. This adjustment can be used for minor cycle time changes without the need to remove the cartridge from the body.

For external adjustment, lift handle slightly to expose 1/16″ hex socket set screw (Figure F). Turn adjustment set screw clockwise to increase cycle time or counter-clockwise to decrease cycle time. If greater timing adjustment is required, follow the instructions for adjusting the timing on a Push-Button Self-Closing Cartridge.

FIGURE A

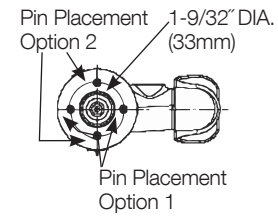

FIGURE B

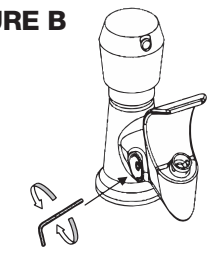

FIGURE C

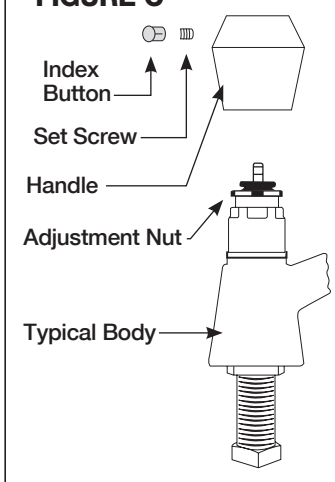

FIGURE D

How To Adjust (Top View)

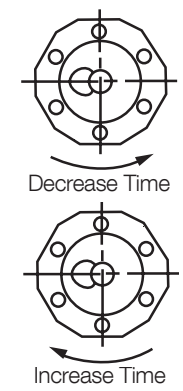

FIGURE E

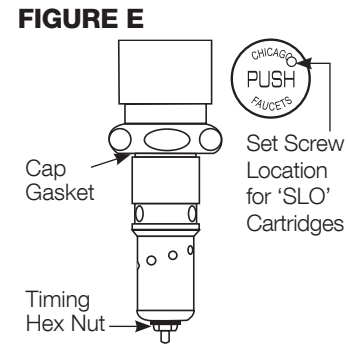

FIGURE F

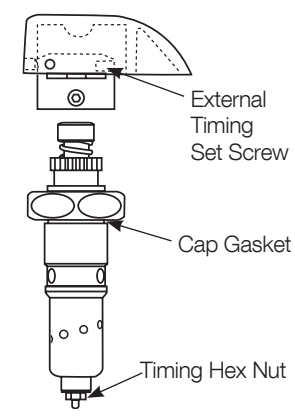

Care and Maintenance
All Chicago Faucets fittings are designed and engineered to meet or exceed industry performance standards. Care should be taken when cleaning this product. Do not use abrasive cleaners, chemicals or solvents as they can result in surface damage. Use mild soap with warm water for cleaning and protecting the surface of Chicago Faucets fittings.

For additional technical assistance, call 800/TEC-TRUE (800-832-8783) or visit our website at chicagofaucets.com.

CHICAGO FAUCETS LIMITED WARRANTY

TO WHOM DOES THIS WARRANTY APPLY? — The Company extends the following limited warranty to the original user only.

WHAT DOES THIS WARRANTY COVER AND HOW LONG DOES IT LAST?
This warranty covers the following Commercial Products:

LIFETIME FAUCET WARRANTY — The "Faucet," defined as any metal cast, forged, stamped or formed portion of the Product, not including electronic or moving parts or other products separately covered by this Limited Warranty or water restricting components or other components, is warranted against material manufacturing defects for the life of the Product.

FIVE YEAR FAUCET WARRANTY — Certain Products and portions of the Product are warranted against material manufacturing defects for a period of five (5) years from the date of Product purchase. Products warranted against material manufacturing defects for a period of five (5) years from the date of Product purchase are referred to by the product numbers 42X, 43X, 15XX and E-Tronic® - 4X, 5X, 6X, 7X, 8X and 9X. All zinc die cast portions of Product are warranted against material manufacturing defects for a period of five (5) years from the date of Product purchase.

THREE YEAR ELECTRONICS WARRANTY — Electronic components, including the solenoid, are warranted for three (3) years from the date of installation.

FIVE YEAR CARTRIDGE WARRANTY — The "Cartridge", defined as the metal portion of any Product typically referred to by the product numbers containing 1-099, 1-100, 377X, 217X and 274X, excluding any rubber or plastic components, is warranted against material manufacturing defects for a period of five (5) years from the date of Product purchase.
All Cartridges included in the Company's Single Control or Shower Products also are warranted against material manufacturing defects for a period of five (5) years from the date of Product purchase.

ONE YEAR FINISH WARRANTY – COMMERCIAL — For Products used in commercial applications, the finish of the Product is warranted against material manufacturing defects for a period of one (1) year from the date of Product purchase.

OTHER WARRANTIES — All other Products not covered above are warranted against material manufacturing defects for a period of one (1) year from the date of Product purchase.

Other restrictions and limitations apply. For complete warranty details, call Chicago Faucets Customer Service at 847-803-5000 or visit chicagofaucets.com.

The Chicago Faucet Company
2100 South Clearwater Drive
Des Plaines, IL 60018
Phone: 847/803-5000
Fax: 847/803-5454
Technical: 800/832-8783
www.chicagofaucets.com

© 2017 The Chicago Faucet Company. All rights reserved. Product specifications subject to change without notice.

Data sheets to follow.

Residential Electric Water Heaters

ProMax®

NAECA COMPLIANT 2015 ENERGY EFFICIENT

ENHANCED HEATING ELEMENTS

- Dual 4500 watt elements for fast recovery and reliable operation.
- Incoloy stainless steel lower element lasts longer than a standard copper element.

DYNACLEAN™ DIFFUSER DIP TUBE

- Helps reduce lime and sediment buildup and maximizes hot water output. Made from long-lasting PEX cross-linked polymer.

HIGH ENERGY FACTORS

- Eco-friendly non-CFC foam insulation, heat traps and other features combine to yield a higher Energy Factor that maximizes savings on operating costs.

COREGARD™ ANODE ROD

- Our anode rods have a stainless steel core that extends the life of the anode rod allowing superior tank protection far longer than standard anode rods.

BLUE DIAMOND® GLASS COATING

- Provides superior corrosion resistance compared to industry standard glass lining.

ENHANCED-FLOW BRASS DRAIN VALVE

- Our residential water heaters have a solid brass, tamper resistant, enhanced-flow, ball type, drain valve.
- Uses a standard female hose fitting that allows for fast and easy draining during maintenance.
- Designed for easy operation, this valve includes an integral screwdriver slot that features a ¼ turn (open/close) radius, which not only permits full straight-through water flow but also a quick and positive shut off.

CODE COMPLIANCE

- Meets UBC, CEC and HUD National Codes.
- Meets the thermal efficiency and standby loss requirements of the U.S. Department of Energy and current edition of ASHRAE/IESNA 90.1.
- Complies with the Federal Energy Conservation Standards effective April 16, 2015, in accordance with the Energy Policy and Conservation Act (EPCA), as amended.

APPROVED FOR MANUFACTURED HOUSING

- All residential electric water heaters are compliant with HUD Standards for mobile homes/manufactured housing.

CERTIFIED TO UL 174 FOR HOUSEHOLD ELECTRIC WATER HEATERS

CSA CERTIFIED AND ASME RATED T&P RELIEF VALVE

DESIGN-LISTED BY UNDERWRITERS LABORATORIES

- Certified at 300 PSI test pressure and 150 PSI working pressure.
- Listed according to UL 174 standards governing storage tank-type electric water heaters.

6-YEAR LIMITED TANK AND PARTS WARRANTY

- For complete information, consult written warranty or go to hotwater.com.

Low Lead Content

©2015 A. O. Smith Corporation. All rights reserved.

www.hotwater.com | 800-527-1953 Toll-Free USA | A. O. Smith Corporation | 500 Tennessee Waltz Parkway | Ashland City, TN 37015

AOSRE50602

Residential Electric Water Heaters

Model Number	Gallon Capacity	First Hour Rating Gallon	Energy Factor	Recovery @ 90°F Rise Gallon Per Hour	Element Wattage 240V		Dimensions in Inches			Approx. Shipping Weight (lbs)
					Standard	Maximum	A	B	C	
Tall Models										
ENT-30†	30	47	0.95	21	4500	6000	46-1/2	39-1/2	19	95
ENT-40†	40	51	0.95	21	4500	6000	60-1/4	53-1/4	20	118
ENTB-50*	50	70	0.95	21	4500	6000	60-1/4	51-1/4	21	131
ENT-50†	50	71	0.95	21	4500	6000	60-1/2	51-1/4	22	134
ENT-55†	55	76	0.94	21	4500	6000	56-1/2	48-1/2	24	145
Short Models										
ENSB-30*	30	48	0.95	21	4500	6000	39	30-1/2	20	95
ENS-30†	30	49	0.95	21	4500	6000	39-3/4	30-1/2	22	94
ENS-40†	40	55	0.95	21	4500	6000	50	40-3/4	22	109
ENS-50†	50	62	0.95	21	4500	6000	49-3/4	40-3/8	24	161
Lowboy Top Connect Models										
ENLB-30*	28	40	0.95	21	4500	6000	30	21-3/4	22	96
ENL-30†	28	43	0.95	21	4500	6000	31-1/4	21-3/4	24	115
ENLB-40*	38	46	0.95	21	4500	6000	31-3/4	24	24	118
ENL-40†+	38	44	0.95	21	4500	6000	33-1/2	24	26	118

3/4" water connections on 8" center.
*Models ship with supplied insulation blanket.
†For 10-year tank and 6-year parts warranty, change "E" to "P" in the model number (example: ENT-30 becomes PNT-30).
+ Top T&P option not available on this model.
Only available for 240V or 208V applications.
Dimensions and specifications subject to change without notice in accordance with our policy of continuous product improvement.

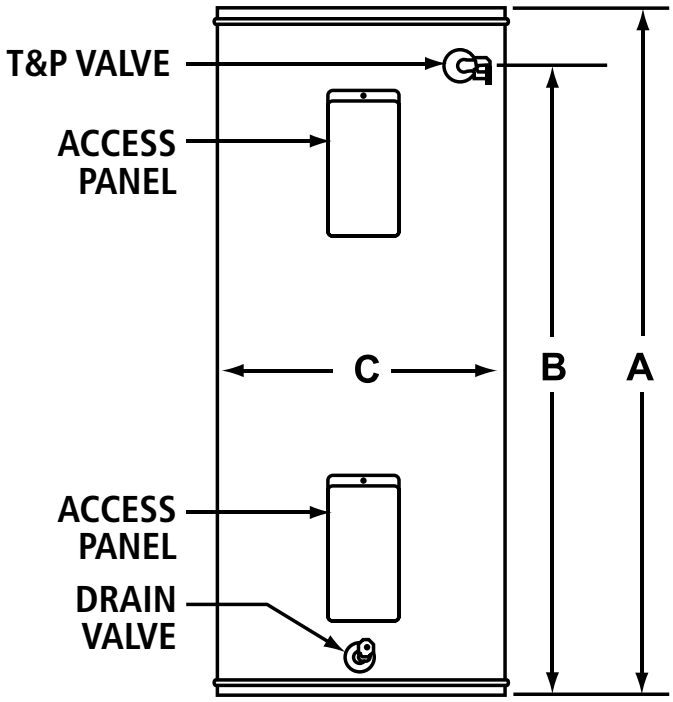

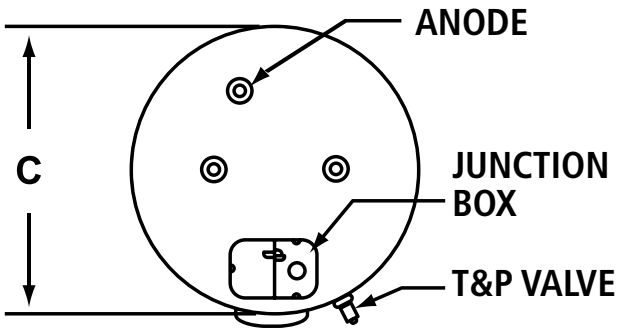

For technical information call 800-527-1953. A. O. Smith Corporation reserves the right to make product changes or improvements without prior notice.

A.O.Smith

Water Heaters

Instruction Manual

RESIDENTIAL ELECTRIC WATER HEATERS

FOR POTABLE WATER HEATING ONLY

NOT SUITABLE FOR SPACE HEATING

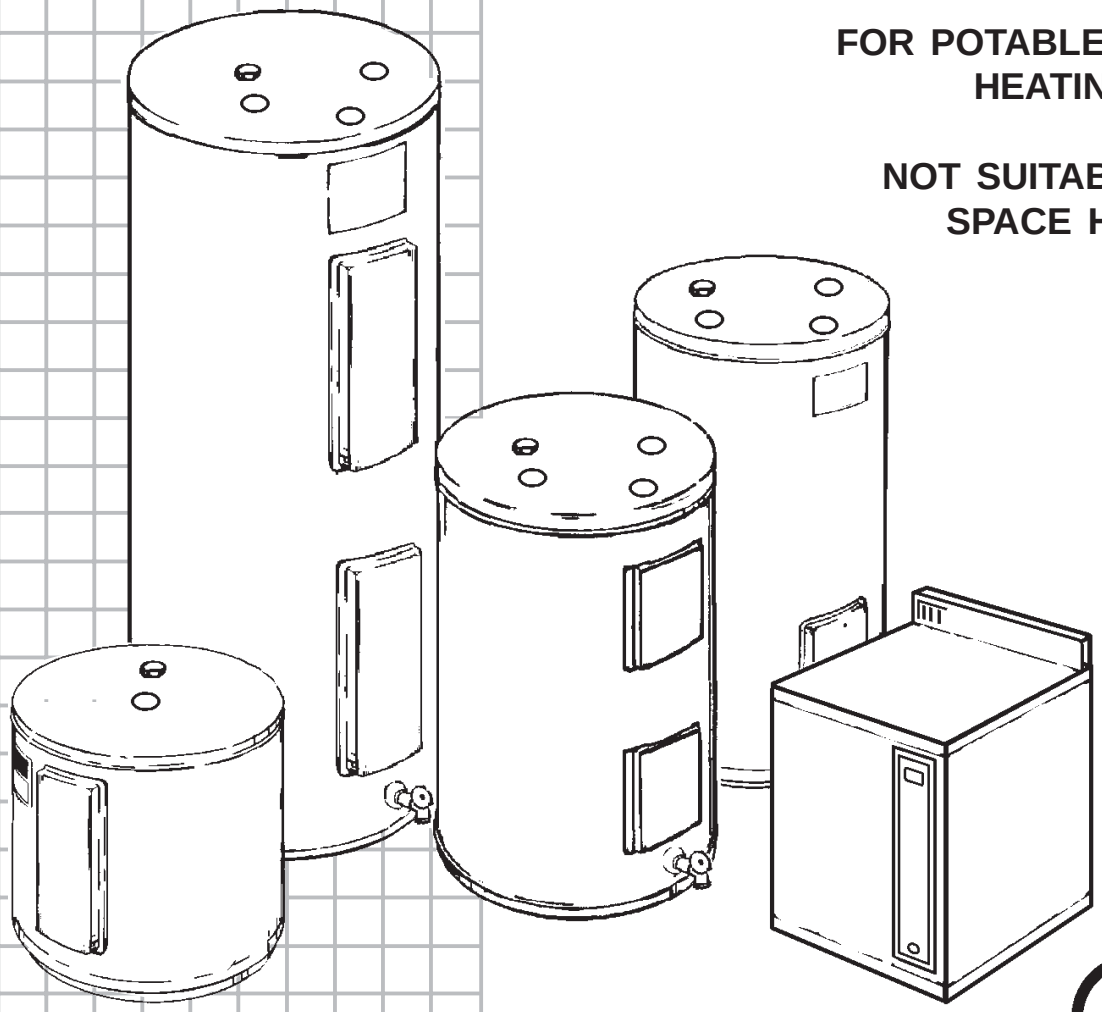

UL LISTED

EFFICIENCY RATING CERTIFIED Gama

GAMA certification applies to all residential electric water heaters with capacities of 20 to 120 gallons. Input rating of 12 Kw or less.

⚠ WARNING

Read and understand instruction manual and safety messages before installing, operating or servicing this water heater.

Failure to follow instructions and safety messages could result in death or serious injury.

Instruction manual must remain with water heater.

ALL TECHNICAL AND WARRANTY QUESTIONS: SHOULD BE DIRECTED TO THE LOCAL DEALER FROM WHOM THE WATER HEATER WAS PURCHASED. IF YOU ARE UNSUCCESSFUL, PLEASE WRITE TO THE COMPANY LISTED ON THE RATING PLATE ON THE WATER HEATER.

KEEP THIS MANUAL IN THE POCKET ON HEATER FOR FUTURE REFERENCE WHEN EVER MAINTENANCE ADJUSTMENT OR SERVICE IS REQUIRED.

PRINTED IN THE U.S.A 0805

PART NO. 184639-001

SAFE INSTALLATION, USE AND SERVICE

Your safety and the safety of others is extremely important in the installation, use and servicing of this water heater.

Many safety-related messages and instructions have been provided in this manual and on your own water heater to warn you and others of a potential injury hazard. Read and obey all safety messages and instructions throughout this manual. It is very important that the meaning of each safety message is understood by you and others who install, use or service this water heater.

⚠	**This is the safety alert symbol. It is used to alert you to potential personal injury hazards. Obey all safety messages that follow this symbol to avoid possible injury or death.**

⚠ DANGER	**DANGER indicates an imminently hazardous situation which, if not avoided, could result in death or injury.**
⚠ WARNING	**WARNING indicates a potentially hazardous situation which, if not avoided, could result in death or injury.**
⚠ CAUTION	**CAUTION indicates a potentially hazardous situation which, if not avoided, may result in minor or moderate injury.**
CAUTION	**CAUTION used without the safety alert symbol indicates a potentially hazardous situation which, if not avoided, could result in property damage.**

All safety messages will generally tell you about the type of hazard, what can happen if you do not follow the safety message and how to avoid the risk of injury.

IMPORTANT DEFINITIONS

- **Qualified Installer:** A qualified installer must have ability equivalent to a licensed tradesman in the fields of plumbing, and electrical installation of these appliances. This would include a thorough understanding of the requirements of the National Electrical Code and applicable local electrical and plumbing codes (and tools necessary to confirm proper installation and operation of the water heater) as they relate to the installation of electric water heaters. The qualified installer must have a thorough understanding of the water heater Instruction Manual.

- **Service Agency:** A service agency also must have ability equivalent to a licensed tradesman in the fields of plumbing, and electrical installation of these appliances. This would include a thorough understanding of the requirements of the National Electrical Code and applicable local electrical and plumbing codes (and tools necessary to confirm proper installation and operation of the water heater) as they relate to the installation of electric water heaters. The service agency must have a thorough understanding of the water heater Instruction Manual.

GENERAL SAFETY

⚠ WARNING

Read and understand instruction manual and safety messages before installing, operating or servicing this water heater.

Failure to follow instructions and safety messages could result in death or serious injury.

Instruction manual must remain with water heater.

CAUTION

Improper installation and use may result in property damage.

- Do not operate water heater if flood damaged.
- Inspect and replace anode.
- Install in location with drainage.
- Fill tank with water before operation.
- Be alert for thermal expansion.

Refer to instruction manual for installation and service.

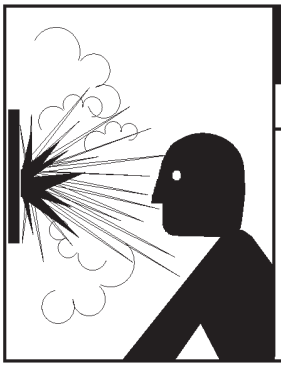

⚠ WARNING

Explosion Hazard

- Overheated water can cause water tank explosion.
- Properly sized temperature and pressure relief valve must be installed in opening provided.

⚠ DANGER

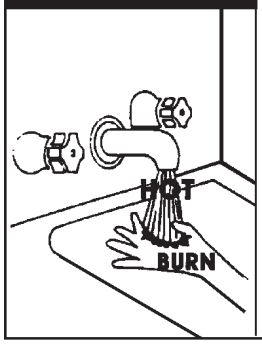

Water temperature over 125°F (52°C) can cause severe burns instantly resulting in severe injury or death.

Children, the elderly, and the physically or mentally disabled are at highest risk for scald injury.

Feel water before bathing or showering.

Temperature limiting valves are available.

Read instruction manual for safe temperature setting.

⚠ WARNING

- **Before removing any access panels or servicing the water heater, make sure the electrical supply to the water heater is turned "OFF".**
- **Failure to do this could result in death, serious bodily injury, or property damage.**

TABLE OF CONTENTS

SAFE INSTALLATION, USE AND SERVICE 2
GENERAL SAFETY 3
TABLE OF CONTENTS 3
INTRODUCTION 4
Preparing for the New Installation 4
NOTES 4
TYPICAL INSTALLATION 5
WIRING DIAGRAMS 6
MIXING VALVE USAGE 7
LOCATING THE NEW WATER HEATER 8
Facts to Consider About Location 8
Insulation Blankets 8
INSTALLING THE NEW WATER HEATER 8
Water Piping 8-9
Temperature-Pressure Relief Valve 9-10
Filling the Water Heater 10
T&P Valve and Pipe Insulation (Selected Models) 10
TEMPERATURE REGULATION 11
Temperature Adjustment 11
FOR YOUR INFORMATION 12
Thermal Expansion 12
Strange Sounds 12
Operational Conditions 12
Smelly Water 12
"Air" in Hot Water Faucets 12
High Water Temperature Shut Off System 12
PERIODIC MAINTENANCE 12
Anode Rod Inspection 12-13
Temperature-Pressure Relief Valve Operation 13
Draining 13
Drain Valve Washer Replacement 13
Service 13
LEAKAGE CHECKPOINTS 14
REPAIR PARTS LIST 15
TROUBLESHOOTING 16
WARRANTY 17-18

INTRODUCTION

Thank You for purchasing this water heater. Properly installed and maintained, it should give you years of trouble free service.

Abbreviations Found In This Instruction Manual:

- ANSI - American National Standards Institute
- ASME - American Society of Mechanical Engineers
- GAMA - Gas Appliance Manufacturer's Association
- NEC - National Electric Code
- NFPA - National Fire Protection Association
- UL - Underwriters Laboratory

PREPARING FOR THE INSTALLATION

1. Read the "General Safety" section of this manual first and then the entire manual carefully. If you don't follow the safety rules, the water heater will not operate properly. It could cause DEATH, SERIOUS BODILY INJURY AND/OR PROPERTY DAMAGE.

   This manual contains instructions for the installation, operation, and maintenance of the electric water heater. It also contains warnings throughout the manual that you must read and be aware of. All warnings and all instructions are essential to the proper operation of the water heater and your safety. Since we cannot put everything on the first few pages, **READ THE ENTIRE MANUAL BEFORE ATTEMPTING TO INSTALL OR OPERATE THE WATER HEATER.**

2. The installation must conform with these instructions and the local code authority having jurisdiction and the requirements of the power company. In the absence of code requirements follow NFPA-70 (latest edition). The National Electric Code which may be ordered from: National Fire Protection Association, 1 Batterymarch Park, Quincy, MA 02269.

3. If after reading this manual you have any questions or do not understand any portion of the instructions, call the local utility or the manufacturer whose name appears on the rating plate.

4. Carefully plan the place where you are going to put the water heater. INSTALLATION OR SERVICE OF THIS WATER HEATER REQUIRES ABILITY EQUIVALENT TO THAT OF A LICENSED TRADESMAN IN THE FIELD INVOLVED. PLUMBING AND ELECTRICAL WORK ARE REQUIRED.

   Examine the location to ensure the water heater complies with the "Facts to Consider About the Location" section in this manual.

5. For California installation this water heater must be braced, anchored, or strapped to avoid falling or moving during an earthquake. See instructions for correct installation procedures. Instructions may be obtained from California Office of the State Architect, 400 P Street, Sacramento, CA 95814.

6. Massachusetts Code requires this water heater to be installed in accordance with Massachusetts 248-CMR 2.00: State Plumbing Code and 248-CMR 5.00.

NOTES

TYPICAL INSTALLATION

LOWBOYS

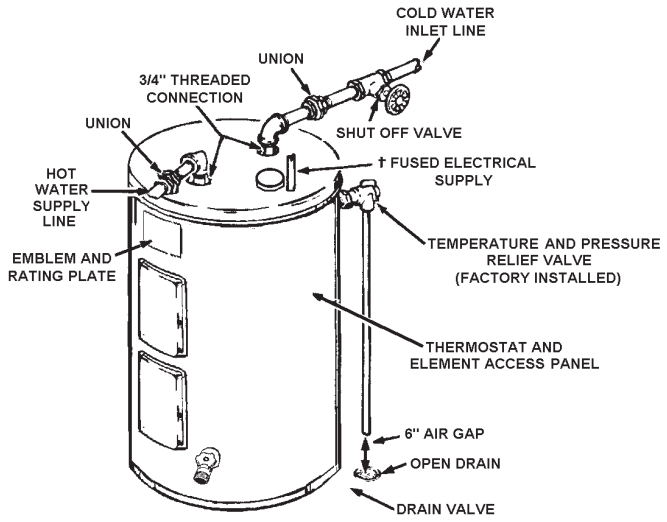

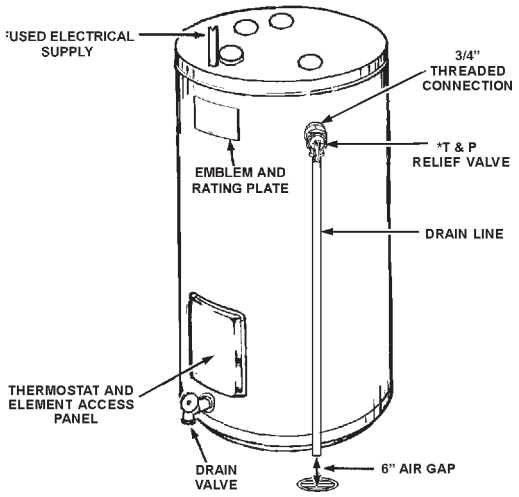

UPRIGHTS

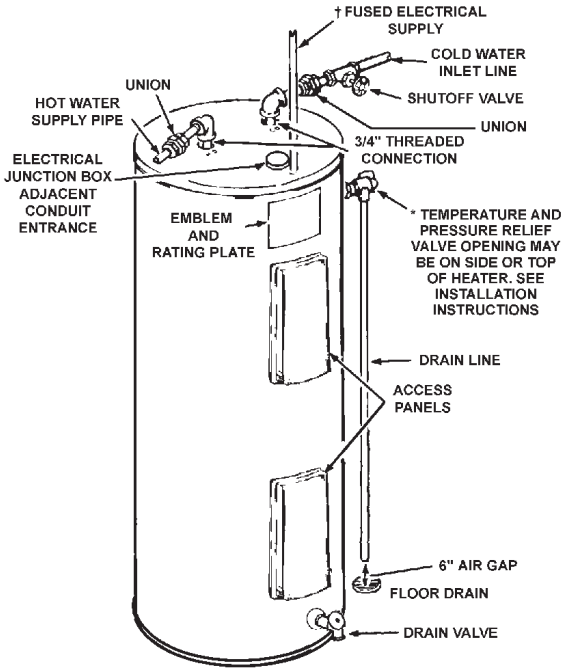

COMPACTS

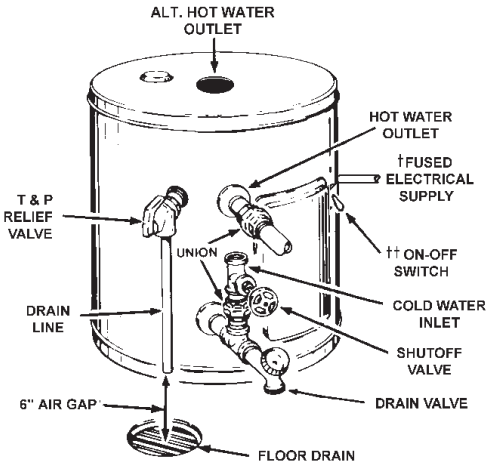

†† MODEL ELJF - 10 ONLY

TABLE TOPS

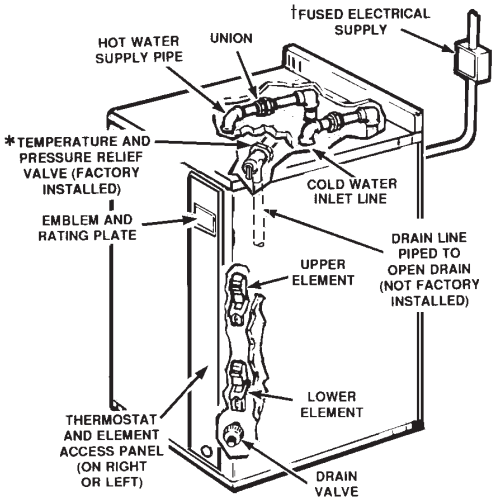

INSTALL SUITABLE DRAIN PANS UNDER HEATERS TO PREVENT DAMAGE DUE TO LEAKAGE. REFER TO WATER HEATER LOCATION ON PAGE 8.

INSTALL VACUUM RELIEF IN COLD WATER INLET LINE AS REQUIRED BY LOCAL CODES.

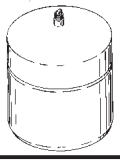

INSTALL THERMAL EXPANSION TANK OR DEVICE IF WATER HEATER IS INSTALLED IN A CLOSED WATER SYSTEM.

FIGURE 1.

WIRING DIAGRAMS

⚠ WARNING

- **Before removing any access panels or servicing the water heater, make sure the electrical supply to the water heater is turned "OFF".**
- **Failure to do this could result in death, serious bodily injury, or property damage.**

TURN OFF THE HEATER ELECTRICAL SUPPLY BEFORE SERVICING ANY ELECTRICAL COMPONENTS.

S-1

THREE WIRE CIRCUIT FOR ELECTRIC CO. CO-OP PROGRAMS

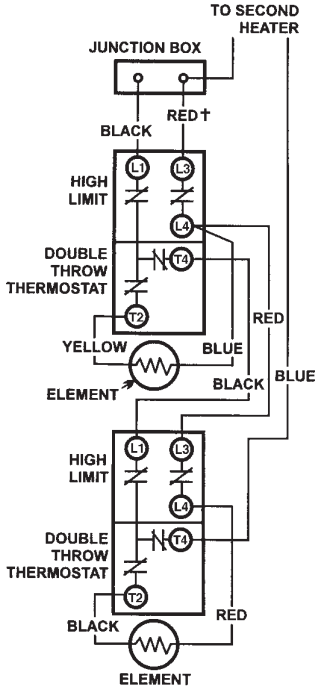

** MUST NOT BE CONVERTED TO SIMULTANEOUS OPERATION

† WHITE FOR 120V AND 277V

C-2

TWO WIRE CIRCUIT FOR SINGLE ELEMENT HEATERS EQUIPPED WITH HIGH LIMIT CONTROL

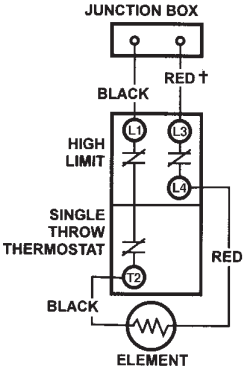

† WHITE FOR 120V AND 277V

A-6

TWO WIRE CIRCUIT FOR NON-SIMULTANEOUS OPERATION, HAS SINGLE HIGH LIMIT CONTROL

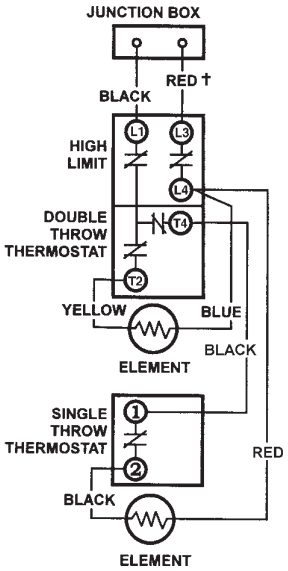

A-9

240 VOLT "OFF PEAK" NON-SIMULTANEOUS OPERATION BOTTOM ELEMENT ON SEPARATE TIME CLOCK OR "OFF PEAK" METER

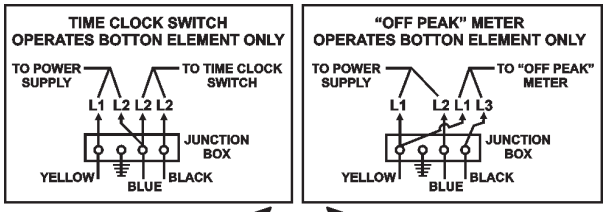

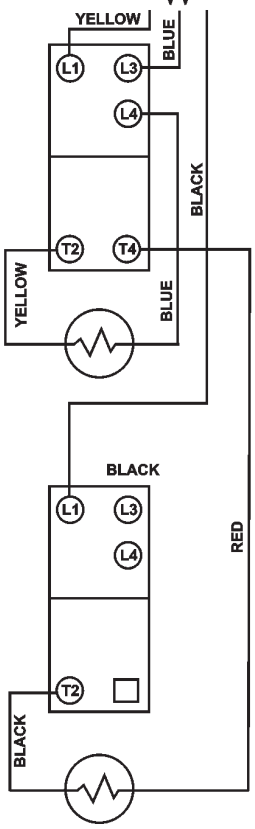

FIGURE 2.

MIXING VALVE USAGE

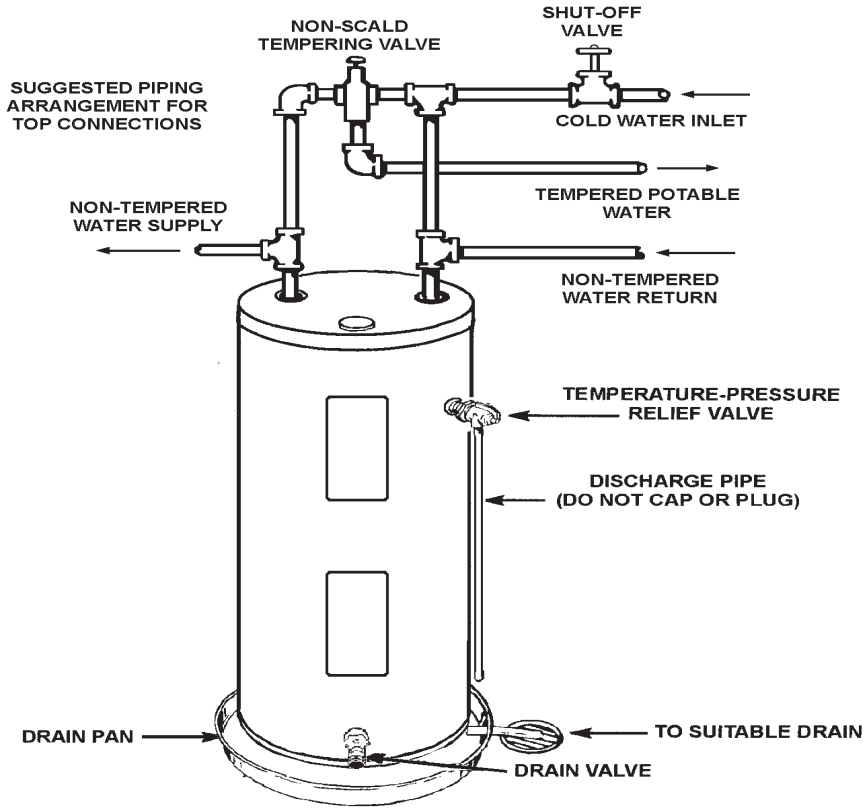

FIGURE 3.

Water (Potable) Heating: All models are considered suitable for water (potable) heating only.

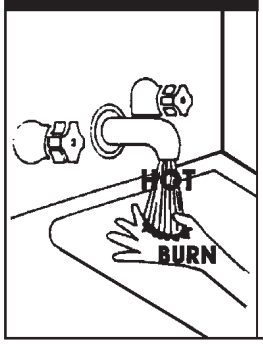

⚠DANGER

Water temperature over 125°F (52°C) can cause severe burns instantly resulting in severe injury or death.

Children, the elderly, and the physically or mentally disabled are at highest risk for scald injury.

Feel water before bathing or showering.

Temperature limiting valves are available.

Read instruction manual for safe temperature setting.

HOTTER WATER CAN SCALD:

Water heaters are intended to produce hot water. Water heated to a temperature which will satisfy space heating, clothes washing, dish washing, and other sanitizing needs can scald and permanently injure you upon contact. Some people are more likely to be permanently injured by hot water than others. These include the elderly, children, the infirm, or physically/mentally handicapped. If anyone using hot water in your home fits into one of these groups or if there is a local code or state law requiring a certain temperature water at the hot water tap, then you must take special precautions. In addition to using the lowest possible temperature setting that satisfies your hot water needs, a means such as a *mixing valve, shall be used at the hot water taps used by these people or at the water heater. Mixing valves are available local plumbing contractor. Consult a Qualified Installer or Service Agency. Follow mixing valve manufacturer's instructions for installation of the valves. Before changing the factory setting on the thermostat, read the "Temperature Regulation" section in this manual.

LOCATING THE NEW WATER HEATER

FACTS TO CONSIDER ABOUT THE LOCATION

CAUTION

Property Damage Hazard

- All water heaters eventually leak
- Do not install without adequate drainage.

Carefully choose an indoor location for the new water heater, because the placement is a very important consideration for the safety of the occupants in the building and for the most economical use of the appliance.

Whether replacing an old water heater or putting the water heater in a new location, the following critical points must be observed:

1. Select a location indoors as close as practical or centralized to the water piping system as possible. The water heater should be located in an area not subject to freezing temperatures.

2. Selected location must provide adequate clearances (4") for servicing parts such as the thermostats, drain valve and relief valve. Adequate clearance for servicing this appliance should be considered before installation, such as changing the anodes, etc.

Installation of the water heater must be accomplished in such a manner that if the tank or any connections should leak, the flow will not cause damage to the structure. For this reason, it is not advisable to install the water heater in an attic or upper floor. When such locations cannot be avoided, a suitable drain pan should be installed under the water heater. Drain pans are available from your local plumbing contractor. Such a drain pan must have a minimum length and width of at least 2 inches (51 mm) greater that the water heater dimensions and must be piped to an adequate drain.

Water heater life depends upon water quality, water pressure and the environment in which the water heater is installed. Water heaters are sometimes installed in locations where leakage may result in property damage, even with the use of a drain pan piped to a drain. However, unanticipated damage can be reduced or prevented by a leak detector or water shut-off device used in conjunction with a piped drain pan. These devices are available from some plumbing supply wholesalers and retailers, and detect and react to leakage in various ways:

- Sensors mounted in the drain pan that trigger an alarm or turn off the incoming water to the water heater when leakage is detected.
- Sensors mounted in the drain pan that turn off the water supply to the entire home when water is detected in the drain pan.
- Water supply shut-off devices that activate based on the water pressure differential between the cold water and hot water pipes connected to the water heater.
- Devices that will turn off the gas supply to a gas water heater while at the same time shutting off its water supply.

INSULATION BLANKETS

Insulation blankets are available to the general public for external use on electric water heaters but are not necessary with this product. The purpose of an insulation blanket is to reduce the standby heat loss encountered with storage tank heaters. Your water heater meets or exceeds the National Appliance Energy Conversation Act standards with respect to insulation and standby loss requirements, making an insulation blanket unnecessary.

Should you choose to apply an insulation blanket to this heater, you should follow these instructions below. Failure to follow these instructions can result in fire, serious personal injury, or death.

- Do not cover the temperature and pressure relief (T & P) valve with an insulation blanket.
- Do not cover the instruction manual. Keep it on the side of the water heater or nearby for future reference.
- Do obtain new warning and instruction labels for placement on the blanket directly over the existing labels.

INSTALLING THE NEW WATER HEATER

WATER PIPING

⚠ DANGER

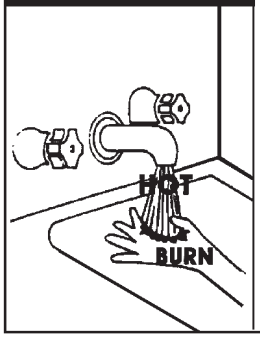

Water temperature over 125°F (52°C) can cause severe burns instantly resulting in severe injury or death.

Children, the elderly, and the physically or mentally disabled are at highest risk for scald injury.

Feel water before bathing or showering.

Temperature limiting valves are available.

Read instruction manual for safe temperature setting.

HOTTER WATER CAN SCALD:
Water heaters are intended to produce hot water. Water heated to a temperature which will satisfy space heating, clothes washing, dish washing, cleaning and other sanitizing needs can scald and permanently injure you upon contact. Some people are more likely to be permanently injured by hot water than others. These include the elderly, children, the infirm, or physically/mentally handicapped. If anyone using hot water in your home fits into one of these groups or if there is a local code or state law requiring a certain temperature water at the hot water tap, then you must take special precautions. In addition to using the lowest possible temperature setting that satisfies your hot water needs, a means such as a *mixing valve, shall be used at the hot water taps used by these people or at the water heater. Valves for reducing point of use temperature by mixing cold and hot water are also available.

Consult a Qualified Installer or Service Agency. Follow manufacturer's instructions for installation of the valves. Before changing the factory setting on the thermostat, read the "Temperature Regulation" section in this manual.

⚠ WARNING

Toxic Chemical Hazard

- Do not connect to non-potable water system.

This water heater shall not be connected to any heating systems or component(s) used with a non-potable water heating appliance.

Toxic chemicals, such as those used for boiler treatment shall not be introduced into this system.

Water supply systems may, because of such events as high line pressure, frequent cut-offs, the effects of water hammer among others, have installed devices such as pressure reducing valves, check valves, back flow preventers, etc. to control these types of problems. When these devices are not equipped with an internal by-pass, and no other measures are taken, the devices cause the water system to be closed. As water is heated, it expands (thermal expansion) and closed systems do not allow for the expansion of heated water.

The water within the water heater tank expands as it is heated and increases the pressure of the water system. If the relieving point of the water heater's temperature-pressure relief valve is reached, the valve will relieve the excess pressure. **The temperature-pressure relief valve is not intended for the constant relief of thermal expansion.** This is an unacceptable condition and must be corrected. It is recommended that any devices installed which could create a closed system have a by-pass and/or the system have an expansion tank or device to relieve the pressure built by thermal expansion in the water system. Expansion tanks are available for ordering through a local plumbing contractor. Contact the local water supplier and/or a service agency for assistance in controlling these situations.

NOTE: To protect against untimely corrosion of hot and cold water fittings, it is strongly recommended that di-electric unions or couplings be installed on this water heater when connected to copper pipe.

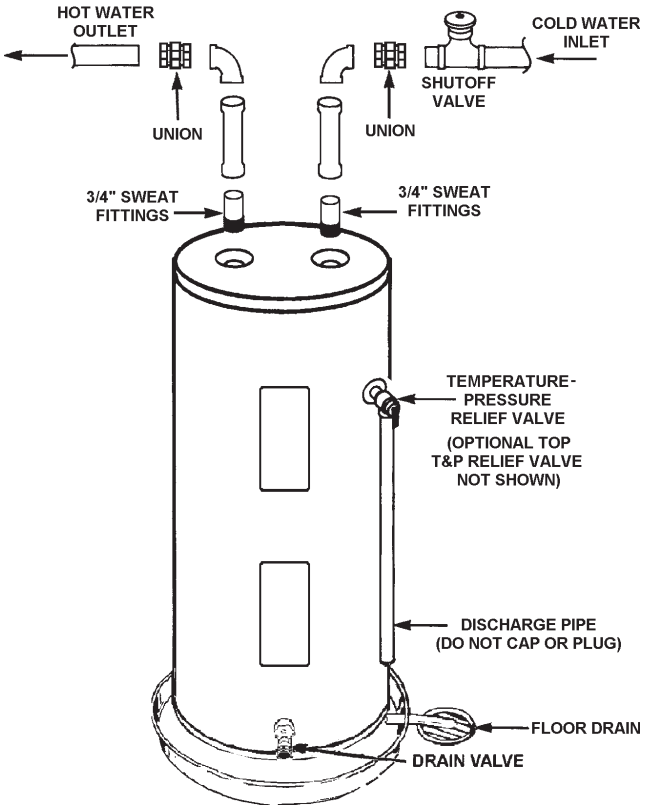

FIGURE 4.

Figure 4 shows the typical attachment of the water piping to the water heater. The water heater is equipped with 3/4 inch NPT water connections.

NOTE: If using copper tubing, solder tubing to an adapter before attaching the adapter to the cold water inlet connection. Do not solder the cold water supply line directly to the cold water inlet, it will harm the dip tube and damage the tank.

TEMPERATURE-PRESSURE RELIEF VALVE

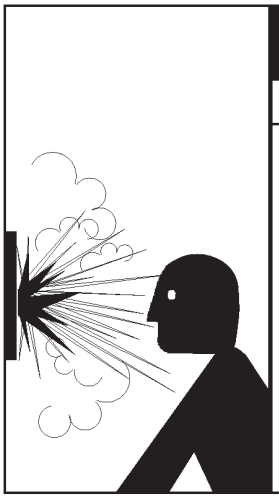

WARNING

Explosion Hazard

- Temperature-pressure relief valve must comply with ANSI Z21.22 and ASME code.
- Properly sized temperature-relief valve must be installed in opening provided.
- Can result in overheating and excessive tank pressure.
- Can cause serious injury or death.

This heater is provided with a properly certified combination temperature - pressure relief valve by the manufacturer.

CAUTION

Property Damage Hazard

- Avoid water heater damage.
- Install thermal expansion tank if necessary.
- Do not apply heat to cold water inlet.
- Contact qualified installer or service agency.

The valve is certified by a nationally recognized testing laboratory that maintains periodic inspection of production of listed equipment of materials as meeting the requirements for Relief Valves and Automatic Gas Shut-off Devices for Hot Water Supply Systems, ANSI Z21.22 • CSA 4.4, and the code requirements of ASME.

If replaced, the valve must meet the requirements of local codes, but not less than a combination temperature and pressure relief valve certified as indicated in the above paragraph.

The valve must be marked with a maximum set pressure not to exceed the marked hydrostatic working pressure of the water heater (150 psi = 1,035 kPa) and a discharge capacity not less than the water heater input rate as shown on the model rating plate.

For safe operation of the water heater, the relief valve must not be removed from its designated opening nor plugged.

The temperature-pressure relief valve must be installed directly into the fitting of the water heater designed for the relief valve. Position the valve downward and provide tubing so that any discharge will exit only within 6 inches (153 mm) above, or at any distance below the structural floor. Be certain that no contact is made with any live electrical part. The discharge opening must not be blocked or reduced in size under any circumstances. Excessive length, over 30 feet (9.14 m), or use of more than four elbows can cause restriction and reduce the discharge capacity of the valve.

No valve or other obstruction is to be placed between the relief valve and the tank. Do not connect tubing directly to discharge drain unless a 6 inch air gap is provided. To prevent bodily injury, hazard to life, or property damage, the relief valve must be allowed to discharge water in quantities should circumstances demand. If the discharge pipe is not connected to a drain or other suitable means, the water flow may cause property damage.

CAUTION

Water Damage Hazard

- Temperature-pressure relief valve discharge pipe must terminate at adequate drain.

The Discharge Pipe:

- Shall not be smaller in size than the outlet pipe size of the valve, or have any reducing couplings or other restrictions.
- Shall not be plugged or blocked.
- Shall be of material listed for hot water distribution.
- Shall be installed so as to allow complete drainage of both the temperature-pressure relief valve, and the discharge pipe.
- Shall terminate at an adequate drain.
- Shall not have any valve between the relief valve and tank.

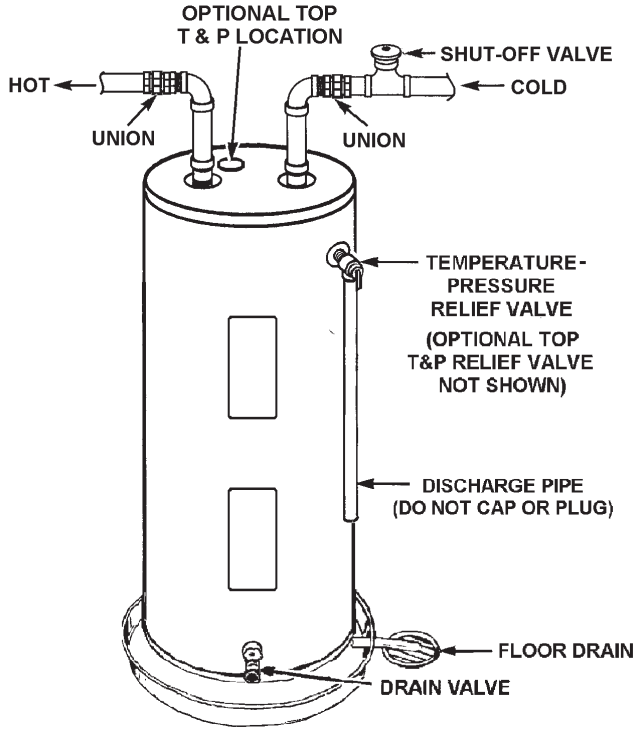

FIGURE 5.

⚠DANGER

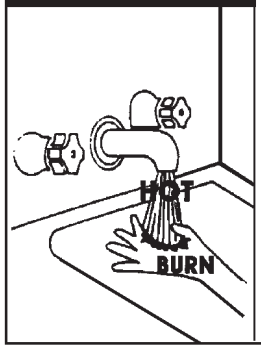

Water temperature over 125°F (52°C) can cause severe burns instantly resulting in severe injury or death.

Children, the elderly, and the physically or mentally disabled are at highest risk for scald injury.

Feel water before bathing or showering.

Temperature limiting valves are available.

Read instruction manual for safe temperature setting.

The temperature-pressure relief valve must be manually operated at least once a year. Caution should be taken to ensure that (1) no one is in front of or around the outlet of the temperature-pressure relief valve discharge line, and (2) the water manually discharged will not cause any bodily injury or property damage because the water may be extremely hot.

If after manually operating the valve, it fails to completely reset and continues to release water, immediately close the cold water inlet to the water heater, follow the draining instructions, and replace the temperature-pressure relief valve with a new one.

FILLING THE WATER HEATER

CAUTION

Property Damage Hazard

- Avoid water heater damage.
- Fill tank with water before operating.

Never use this water heater unless it is completely full of water. To prevent damage to the tank, the tank must be filled with water. Water must flow from the hot water faucet before turning "ON" electrical supply to the water heater.

To fill the water heater with water:

1. Close the water heater drain valve by turning the handle to the right (clockwise). The drain valve is on the lower front of the water heater.
2. Open the cold water supply valve to the water heater. **NOTE: The cold water supply valve must be left open when the water heater is in use.**
3. To insure complete filling of the tank, allow air to exit by opening the nearest hot water faucet. Allow water to run until a constant flow is obtained. This will let air out of the water heater and the piping.
4. Check all water piping and connections for leaks. Repair as needed.

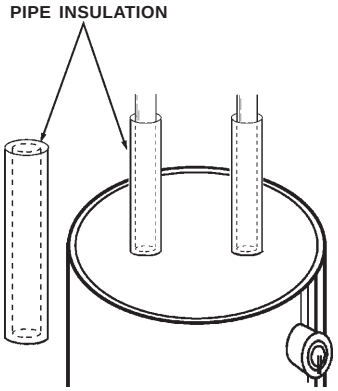

FIGURE 6.

T&P VALVE and PIPE INSULATION (On Selected Models)

Remove insulation for T&P Valve and pipe connections from carton.

Fit pipe insulation over the incoming cold water line and the hot water line. Make sure that the insulation is against the top cover of the heater.

Fit T&P Valve insulation over valve. Make sure that the insulation does not interfere with the lever or outlet of the T&P valve.

Secure all insulation using tape.

TEMPERATURE REGULATION

Due to the nature of the typical water heater, the water temperature in certain situations may vary up to 30°F (16.7 °C) higher or lower at the point of use such as, bathtubs, showers, sink, etc.

Any water heater's intended purpose is to heat water. Hot water is needed for cleansing, cleaning, and sanitizing (bodies, dishes, clothing). Untempered hot water can present a scald hazard. Depending on the time element, and the people involved (adults, children, elderly, infirm, etc.) scalding may occur at different temperatures.

⚠ DANGER

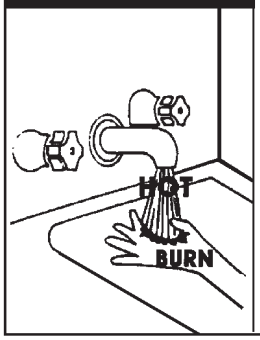

Water temperature over 125°F (52°C) can cause severe burns instantly resulting in severe injury or death.

Children, the elderly, and the physically or mentally disabled are at highest risk for scald injury.

Feel water before bathing or showering.

Temperature limiting valves are available.

Read instruction manual for safe temperature setting.

HOTTER WATER CAN SCALD: Water heaters are intended to produce hot water. Water heated to a temperature which will satisfy space heating, clothes washing, dish washing, and other sanitizing needs can scald and permanently injure you upon contact. Some people are more likely to be permanently injured by hot water than others. These include the elderly, children, the infirm, or physically/mentally handicapped. If anyone using hot water in your home fits into one of these groups or if there is a local code or state law requiring a certain temperature water at the hot water tap, then you must take special precautions. In addition to using the lowest possible temperature setting that satisfies your hot water needs, a means such as a mixing valve, shall be used at the hot water taps used by these people or at the water heater. Mixing valves are available from your local plumbing contractor. Follow manufacturer's instructions for installation of the valves. Before changing the factory setting on the thermostat, read the "Temperature Regulation" section in this manual.

THIS WATER HEATER IS EQUIPPED WITH AN ADJUSTABLE THERMOSTAT TO CONTROL WATER TEMPERATURE. HOT WATER TEMPERATURES DESIRED FOR AUTOMATIC DISHWASHER AND LAUNDRY USE CAN CAUSE SCALDS RESULTING IN SERIOUS PERSONAL INJURY AND/OR DEATH. THE TEMPERATURE AT WHICH INJURY OCCURS VARIES WITH THE PERSON'S AGE AND THE TIME OF THE EXPOSURE. THE SLOWER RESPONSE TIME OF CHILDREN, AGED OR DISABLED PERSONS INCREASES THE HAZARDS TO THEM. NEVER ALLOW SMALL CHILDREN TO USE A HOT WATER TAP, OR TO DRAW THEIR OWN BATH WATER. NEVER LEAVE A CHILD OR DISABLED PERSON UNATTENDED IN A BATHTUB OR SHOWER.

It is recommended that lower water temperatures be used to avoid the risk of scalding. It is further recommended, in all cases, that the water temperature thermostat (See Figure 3) be set for the lowest temperature which satisfies your hot water needs. This will also provide the most energy efficient operation of the water heater. Thermostat(s) are factory set at 120°F (49°C) unless specified differently by state requirements.

KEEPING THE THERMOSTAT SETTING AT 120°F WILL REDUCE THE RISK OF SCALDS.

Figure 7 shows the approximate time-to-burn relationship for normal adult skin. The thermostats on your water heater have a linear relationship between degrees of angular rotation and the corresponding change in temperature. Thus rotating the temperature adjustment indicator 30 angular degrees will result in a 10 degree Fahrenheit change in water temperature.

TEMPERATURE ADJUSTMENT

⚠ WARNING

- **Before removing any access panels or servicing the water heater, make sure the electrical supply to the water heater is turned "OFF".**
- **Failure to do this could result in death, serious bodily injury, or property damage.**

To change the temperature setting:

1. Turn off the heater electrical supply. Do not attempt to adjust thermostat with power on.
2. Remove the thermostat access panels and covers from the thermostats. Do not remove the plastic personnel protectors covering the thermostats.
3. Using a flat tip screwdriver, rotate the adjustment knob to the desired temperature setting.
4. Replace the covers and access panels and turn on heater electrical supply.

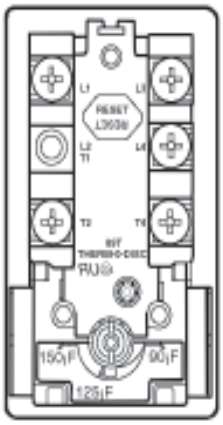

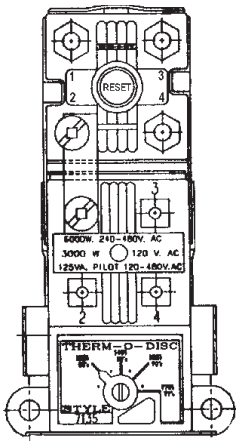

Temperature Settings	Time to Produce 2nd & 3rd Degree Burns on Adult Skin
160°F (71°C)	About 1/2 second
150°F (66°C)	About 1-1/2 seconds
140°F (60°C)	Less than 5 seconds
130°F (54°C)	About 30 seconds
120°F (49°C)	More than 5 minutes
80°F (27°C)	- - - - - - - - - - - - - - - -

FIGURE 7.

FOR YOUR INFORMATION

THERMAL EXPANSION

CAUTION

Property Damage Hazard

- Avoid water heater damage.
- Install thermal expansion tank or device if necessary.
- Contact qualified installer or service agency.

Water supply systems may, because of such events as high line pressure, frequent cut-offs, the effects of water hammer among others, have installed devices such as pressure reducing valves, check valves, back flow preventers, etc. to control these types of problems. When these devices are not equipped with an internal by-pass, and no other measures are taken, the devices cause the water system to be closed. As water is heated, it expands (thermal expansion) and closed systems do not allow for the expansion of heated water.

The water within the water heater tank expands as it is heated and increases the pressure of the water system. If the relieving point of the water heater's temperature-pressure relief valve is reached, the valve will relieve the excess pressure. **The temperature-pressure relief valve is not intended for the constant relief of thermal expansion.** This is an unacceptable condition and must be corrected. It is recommended that any devices installed which could create a closed system have a by-pass and/or the system have an expansion tank or device to relieve the pressure built by thermal expansion in the water system. Expansion tanks are available for ordering through a local plumbing contractor. Contact the local water heater supplier or service agency for assistance in controlling these situations.

STRANGE SOUNDS

Possible noises due to expansion and contraction of some metal parts during periods of heat-up and cool-down do not necessarily represent harmful or dangerous conditions.

OPERATIONAL CONDITIONS

SMELLY WATER

In each water heater there is installed at least one anode rod (see parts sections) for corrosion protection of the tank. Certain water conditions will cause a reaction between this rod and the water. The most common complaint associated with the anode rod is one of a "rotten egg smell" in the hot water. This odor is derived from hydrogen sulfide gas dissolved in the water. The smell is the result of four factors which must all be present for the odor to develop:

a. A concentration of sulfate in the supply water.
b. Little or no dissolved oxygen in the water.
c. A sulfate reducing bacteria which has accumulated within the water heater (this harmless bacteria is nontoxic to humans).
d. An excess of active hydrogen in the tank. This is caused by the corrosion protective action of the anode.

Smelly water may be eliminated or reduced in some water heater models by replacing the anode(s) with one of less active material, and then chlorinating the water heater tank and all hot water lines. Contact the local water heater supplier or service agency for further information concerning an Anode Replacement Kit and this chlorination treatment. If the smelly water persists after the anode replacement and chlorination treatment, we can only suggest that chlorination or aeration of the water supply be considered to eliminate the water problem.

Do not remove the anode leaving the tank unprotected. By doing so, all warranty on the water heater tank is voided.

"AIR" IN HOT WATER FAUCETS

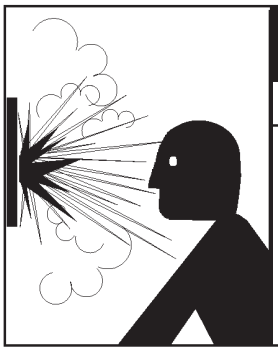

⚠ WARNING

Explosion Hazard

- Flammable hydrogen gases may be present.
- Keep all ignition sources away from faucet when turning on hot water.

HYDROGEN GAS: Hydrogen gas can be produced in a hot water system that has not been used for a long period of time (generally two weeks or more). Hydrogen gas is extremely flammable and explosive. To prevent the possibility of injury under these conditions, we recommend the hot water faucet, located farthest away, be opened for several minutes before any electrical appliances which are connected to the hot water system are used (such as a dishwasher or washing machine). If hydrogen gas is present, there will probably be an unusual sound similar to air escaping through the pipe as the hot water faucet is opened. There must be no smoking or open flame near the faucet at the time it is open.

HIGH WATER TEMPERATURE SHUT OFF SYSTEM

A non-adjustable high temperature limit control operates before steam temperatures are reached. The high limit is in the same area as the upper thermostat and must be reset manually when it operates. BECAUSE THE HIGH LIMIT OPERATES ONLY WHEN ABNORMALLY HIGH WATER TEMPERATURES ARE PRESENT, IT IS IMPORTANT THAT A QUALIFIED SERVICE AGENT BE CONTACTED TO DETERMINE THE REASON FOR OPERATION BEFORE RESETTING.

PERIODIC MAINTENANCE

ANODE ROD INSPECTION

CAUTION

Property Damage Hazard

- Avoid water heater damage.
- Inspection and replacement of anode rod required.

The anode rod is used to protect the tank from corrosion. Most hot water tanks are equipped with an anode rod. The submerged rod sacrifices itself to protect the tank. Instead of corroding the tank, water ions attack and eat away the anode rod. This does not affect the water's taste or color. The rod must be maintained to keep the tank in operating condition.

Anode deterioration depends on water conductivity, not necessarily water condition. A corroded or pitted anode rod indicates high water conductivity and should be checked and/or replaced more often then an anode rod that appears to be intact. Replacement of a depleted

anode rod can extend the life of your water heater. Inspection should be conducted by a qualified technician, and at a minimum should be checked annually after the warranty period.

TEMPERATURE-PRESSURE RELIEF VALVE OPERATION

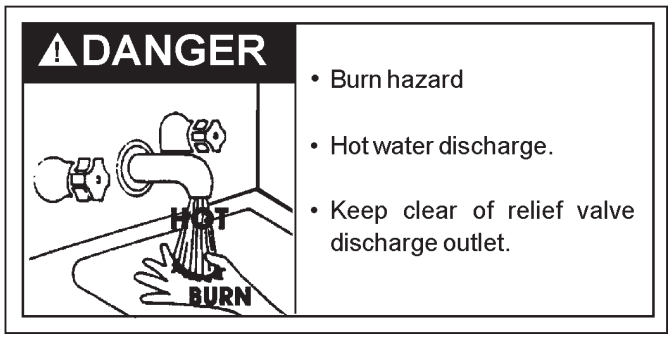

The temperature-pressure relief valve must be manually operated at least once a year.

When checking the temperature-pressure relief valve operation, make sure that (1) no one is in front of or around the outlet of the temperature-pressure relief valve discharge line, and (2) that the water discharge will not cause any property damage, as the water may be extremely hot, see Figure 8.

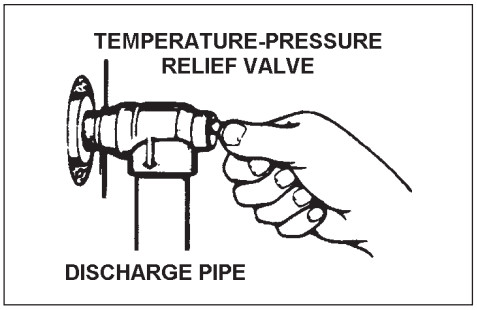

FIGURE 8.

If after manually operating the valve, it fails to completely reset and continues to release water, immediately close the cold water inlet to the water heater, follow the draining instructions, and replace the temperature-pressure relief valve with a new one.

If the temperature-pressure relief valve on the appliance weeps or discharges periodically, this may be due to thermal expansion. You may have a check valve installed in the water line or a water meter with a check valve. Consult your local water supplier or service agency for further information. Do not plug the temperature-pressure relief valve.

DRAINING

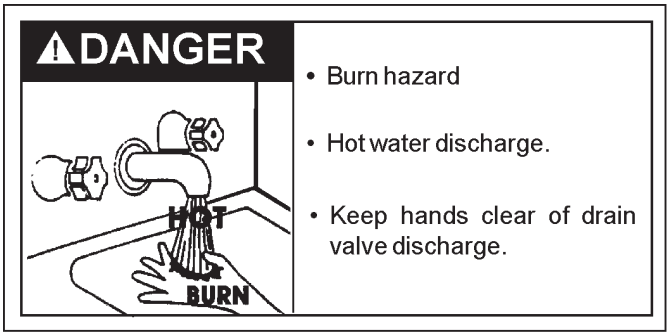

The water heater should be drained if being shut down during freezing temperatures. Also periodic draining and cleaning of sediment from the tank may be necessary.

1. Turn electrical supply “OFF”.
2. CLOSE the cold water inlet valve to the water heater.
3. OPEN a nearby hot water faucet and leave open to allow for draining.
4. Connect a hose to the drain valve and terminate to an adequate drain.
5. OPEN the water heater drain valve to allow for tank draining.

   <u>NOTE:</u> If the water heater is going to be shut down and drained for an extended period, the drain valve should be left open with hose connected allowing water to terminate to an adequate drain.

6. Close the drain valve.
7. Follow the instructions in the “Filling the Water Heater” section.

DRAIN VALVE WASHER REPLACEMENT

(See Figure 9)

1. Follow “Draining” instructions.
2. Turning counter clockwise ( ), remove the hex cap below the screw handle.
3. Remove the washer and put the new one in place.
4. Screw the handle and cap assembly back into the drain valve and retighten using a wrench. DO NOT OVER TIGHTEN.
5. Follow instructions in the “Filling The Water Heater” section.
6. Check for leaks.

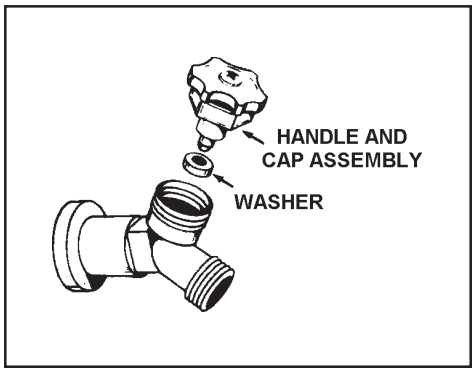

FIGURE 9.

SERVICE

If a condition persists or you are uncertain about the operation of the water heater contact a service agency.

Use this guide to check a “Leaking” water heater. Many suspected “Leakers” are not leaking tanks. Often the source of the water can be found and corrected.

If you are not thoroughly familiar with your water heater and safety practices, contact a qualified installer to check the water heater.

LEAKAGE CHECKPOINTS

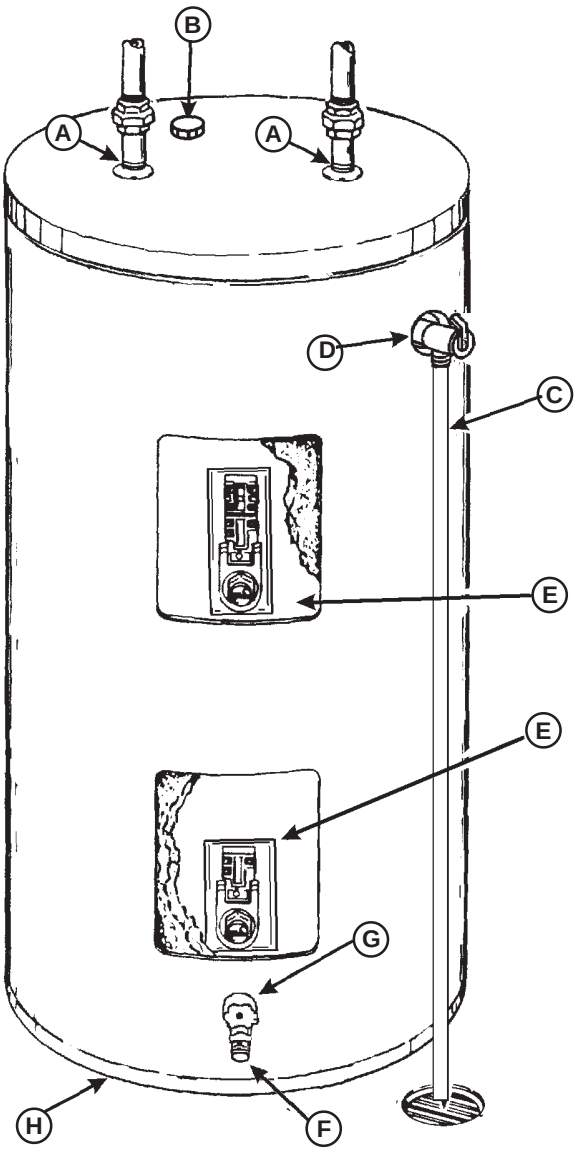

Read this manual first. Then before checking the water heater make sure the electrical power supply has been turned "OFF" before checking the tank for leakage.

*A. Condensation and dripping may be seen on pipes if the water temperature is low in humid weather or pipe connections may be leaking.

*B. The anode rod fitting may be leaking.

C. Small amounts of water from temperature-pressure relief valve may be due to thermal expansion or high water pressure in your area. If the valve is not piped to an open drain the released water could be mistaken for a leaking heater.

*D. The temperature-pressure relief valve may be leaking at the tank fitting.

E. Water on the side of the tank may be condensation due to the panel or insulation not being in place.

F. Water from a drain valve may be due to the valve being slightly opened.

*G. The drain valve may be leaking at the tank fitting.

*H. Water in the water heater bottom or on the floor may be from condensation, loose connections, or the relief valve. DO NOT replace the water heater until a full inspection of all possible water sources is made and necessary corrective steps taken.

Leakage from other appliances, water lines, or ground seepage should also be checked.

* To check where threaded portion enters tank, insert cotton swab between jacket opening and fitting. If cotton is wet, follow "Draining" instructions in the "Periodic Maintenance" section and then remove fitting. Put pipe dope or teflon tape on the threads and replace. Then follow "Filling the Water Heater" instructions in the "Installing the New Water Heater" section.

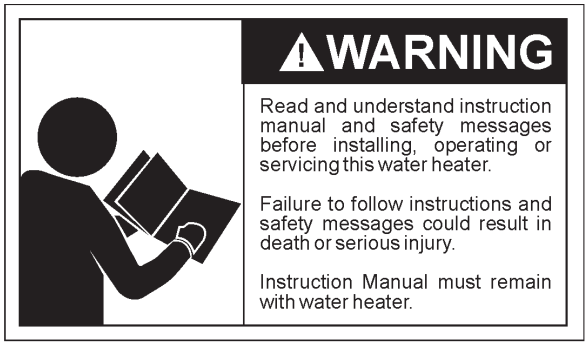

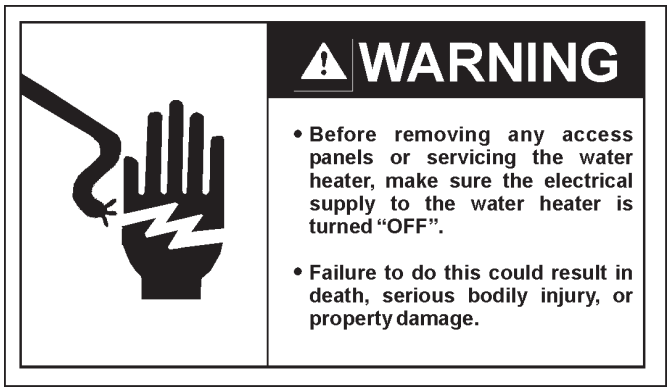

REPAIR PARTS LIST

Key No.	Part Description
1	Upper Heating Element (If Dual Element Unit)
2	Lower Heating Element
3	Element Gasket
4	Lower Thermostat (If Dual Element Unit)
5	Upper Thermostat w/ECO (If Dual Element Unit)
6	Lower Thermostat w/ECO (If Single Element Unit)
7	Outer Door(s)
8	Inlet Tube
9	Drain Valve
10	Drain Valve Washer
11	Anode Rod
12	Anode Outlet/Heat Trap (If Applicable)
13	Temperature-Pressure Relief Valve
14	External Heat Trap Nipples (If Applicable)
15	Pipe Insulation (If Applicable)
16	T&P Insulation (If Applicable)
17	Drain Pan w/Side Drain
*	Instruction Manual

*Not Illustrated

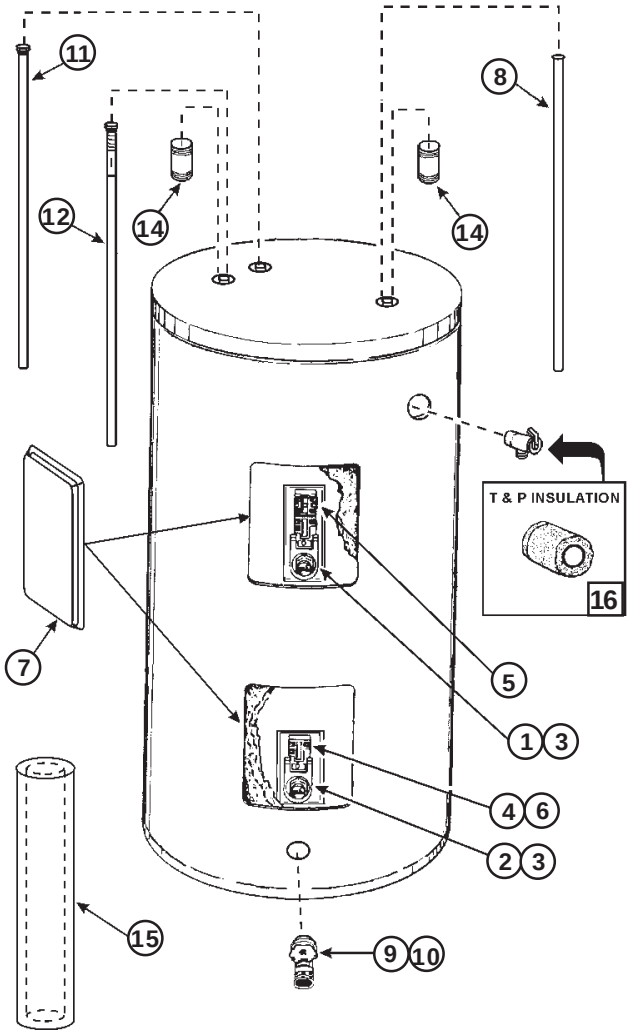

Now that you have purchased this water heater, should a need ever exist for repair parts or service, simply contact the company it was purchased from or the manufacturer listed on the rating plate on the water heater.

Be sure to provide all pertinent facts when you call or visit.

Selling prices will be furnished on request or parts will be shipped at prevailing prices and you will be billed accordingly.

The model number of your Water Heater will be found on the rating place located above or adjacent to outer door.

WHEN ORDERING REPAIR PARTS, ALWAYS GIVE THE FOLLOWING INFORMATION:

- MODEL NUMBER
- SERIAL NUMBER
- PART DESCRIPTION

THIS IS A REPAIR PARTS LIST, NOT A PACKING LIST.

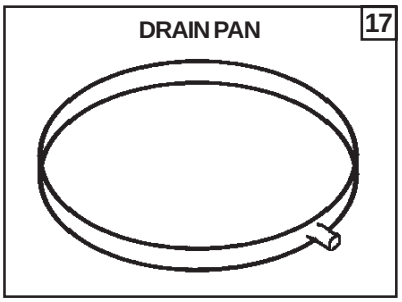

A.O.Smith
Water Heaters

www.aosmithwaterheaters.com

TROUBLESHOOTING GUIDELINES

These guidelines should be utilized by a qualified service agent.

Problem	Cause	Solution
WATER LEAKS (See Leakage Checkpoints on 14)	Improperly sealed, hot or cold supply connection, relief valve or drain valve.	Tighten threaded connections.
	Leakage from other appliances or water lines.	Inspect other appliances near water heater.
LEAKING TEMPERATURE AND PRESSURE RELIEF VALVE	Thermal expansion in closed water system.	Install thermal expansion tank (DO NOT plug T&P valve).
	Improperly seated valve.	Check relief valve for proper operation (DO NOT plug T&P valve).
HOT WATER ODORS (CAUTION: UNAUTHORIZED REMOVAL OF THE ANODE(S) WILL VOID THE WARRANTY FOR FURTHER INFORMATION, CONTACT YOUR DEALER)	High sulfate or mineral content in water supply.	Drain and flush heater thoroughly, then refill.
	Bacteria in water supply.	Chlorinate water supply.
NOT ENOUGH OR NO HOT WATER	Power supply to heater is not on.	Turn disconnect switch on or contact electrician.
	Thermostat set too low.	Refer to temperature regulation.
	Heater undersized.	Reduce hot water use.
	Incoming water is usually cold (Winter).	Allow more time for heat to reheat.
	Leaking hot water from pipes or fixtures.	Have plumber check and repair leaks.
	High temperature limit switch activated.	Contact dealer to determine cause. See temperature regulation.
HOT WATER TOO HOT	Thermostat set too high.	Refer to temperature regulation.
	High temperature limit switch activated.	Contact dealer to determine cause. See temperature regulation.
WATER HEATER SOUNDS	Scale accumulation on elements.	Contact dealer to clean or replace elements.
	Sediment build-up on tank bottom.	Drain and flush heater thoroughly, then refill.

A.O.Smith
Water Heaters

RESIDENTIAL ELECTRIC WARRANTY

THIS WARRANTY IS APPLICABLE TO THE ORIGINAL OWNER ONLY. In accordance with the warranty terms and conditions specified below.

A. O. Smith Water Heaters (the warrantor) will furnish the ORIGINAL OWNER, 1) a replacement A. O. Smith water heater of equivalent size and current model if the glasslined tank in this water heater leaks and, 2) a replacement part for any component part which fails.

THE A. O. SMITH WATER HEATERS REPLACEMENT MODEL OR PART WILL BE WARRANTED FOR ONLY THE UNEXPIRED PORTION OF THE ORIGINAL WARRANTY. The warranty period will be determined by the original date of purchase of the water heater, or in the absence of a Bill of Sale verifying said date, from the date of manufacture indicated on rating plate affixed to this water heater. This warranty is not transferrable and applies to models listed below:

Series	Tank	Parts
Conservationist®	**10-year**	**10-year**
PXHT, PXHS		
ProMax® 10-Year Models	**10-year**	**6-year**
PCRT, PCRS, PCT, PCS, PCL, PCJ, PLJC, PLSC		
ProMax® 6-Year Models	**6-year**	**6-year**
ECRT, ECRS, ECT, ECS, ECL, ECJ, ELJC, ESTT, ELSC, ECLN, ECJN		

When the water heater has been used for other than single family residential application;

1. The tank warranty shall be reduced to 1 year for 6 year models and to 3 years for 10 year models.

2. The parts warranty shall be reduced to 1 year for all models.

CONDITIONS AND EXCEPTIONS

This warranty shall apply only when the water heater is installed and operated in accordance with 1) all local fire codes and plumbing codes, ordinances and regulations, 2) the printed instructions provided with it, 3) good industry practices, and 4) proper safety practices such as but not limited to a properly sized drain pan if installed in an area where leakage from the tank or its connections would result in damage to the area adjacent to the heater. In addition, a new temperature and pressure relief valve, certified by the Canadian Gas Association must have been properly installed and piped to the nearest drain.

This warranty shall apply only when the heater is:

- owned by the original purchaser;
- installed for indoor operation only;
- used at temperatures not exceeding the maximum calibrated setting of its thermostat;
- used at water pressure not exceeding the working pressure shown on the heater;
- filled with potable water, free to circulate at all times and with the tank free of damaging water sediment or scale deposits;
- used in a non-corrosive and non-contaminated atmosphere;
- used with factory approved anode(s) installed;
- in its original installation location;
- in the United States, its territories or possessions, and Canada;
- sized in accordance with proper sizing techniques for residential water heaters;
- bearing a rating plate which has not been altered, defaced or removed except as required by the warrantor;
- used in an open system or in a closed system with a properly sized and installed thermal expansion tank;
- connected to the proper voltage or:
- operated at the factory rated input;
- installed with no attempted, nor actual modification or alteration of the water heater's design in any way, including but not limited to, the attachment of non-company approved appliances or equipment.

Any accident to the water heater or any part thereof (including freezing, fire, floods, or lightning), any misuse, abuse or alteration of it, any operation of it in a modified form, any operation of the water heater on desalinated (deionized) water, or any damage caused by attempts to repair tank leaks or parts, will void this warranty. This warranty does not cover water heaters replaced for cosmetic reasons or for reasons of noise, taste, odor, discolored and/or rusty water. This warranty does not apply to water heaters used to heat pools, whirlpools or hot tubs or used for space heating where its sizing does not conform with specifications of the heating component manufacturer.

This warranty gives you specific legal rights, and you may have other rights which vary under the laws of each state. If any provision of this warranty is prohibited or invalid under applicable state law, that provision shall be ineffective to the extent of the prohibition or invalidity

without invalidating the remainder of the affected provision or the other provisions of this warranty.

SERVICE AND LABOR RESPONSIBILITY

UNDER THIS LIMITED WARRANTY, THE WARRANTOR WILL PROVIDE ONLY A REPLACEMENT WATER HEATER OR PART THEREOF. THE OWNER IS RESPONSIBLE FOR ALL OTHER COSTS. Such costs may include but are not limited to:

a. Labor charges for service, removal, or reinstallation of the water heater or part thereof.

b. Shipping and delivery charges for forwarding the new water heater or replacement part from the nearest distributor and returning the claimed defective heater or part to such distributor.

c. All cost necessary or incidental for handling and administrative charges, and for any materials and/or permits required for installation of the replacement heater or part.

LIMITATION ON IMPLIED WARRANTIES

Implied warranties, including any warranty of merchantability imposed on the sale of this heater under state law are limited to one year duration for the heater or any of its parts. Some states do not allow limitations on how long an implied warranty lasts, so the above limitations may not apply to you.

CLAIM PROCEDURE

Any claim under this warranty should be initiated with the dealer who sold the heater, or with any other dealer handling the warrantor's products. If this is not practical, the owner should contact: A.O. Smith Corporation, 5621 W. 115th Street, Alsip, Illinois 60803. Phone: 1.800.323.2636 or visit our website: www.hotwater.com.

For Canadian customers contact: A.O. Smith Enterprises LTD., P.O. Box 310, 768 Erie Street, Stratford, Ontario N5A6T3 or phone: 1.800.265.8520

Replacement Parts may be ordered through authorized servicers or distributors. Refer to your local Yellow Pages for where to call or contact A.O. Smith Corporation, 5621 W. 115th Street, Alsip, Illinois 60803. Phone: 1.800.433.2545 or visit our website at: www.hotwater.com/parts.

The warrantor will only honor replacement with identical or similar water heater or parts thereof which are manufactured or distributed by the warrantor.

Dealer replacements are made subject to in-warranty validation by warrantor.

PROOF OF PURCHASE AND PROOF OF INSTALLATION DATE ARE REQUIRED TO SUPPORT WARRANTY CLAIM FROM ORIGINAL OWNER. THIS FORM DOES NOT CONSTITUTE PROOF OF PURCHASE OR PROOF OF INSTALLATION.

DISCLAIMERS

NO EXPRESSED WARRANTY HAS BEEN OR WILL BE MADE IN BEHALF OF THE WARRANTOR WITH RESPECT TO THE MERCHANTABILITY OF THE HEATER OR THE INSTALLATION, OPERATION, REPAIR OR REPLACEMENT OF THE HEATER OR PARTS. THE WARRANTOR SHALL NOT BE RESPONSIBLE FOR WATER DAMAGE, LOSS OF USE OF THE UNIT, INCONVENIENCE, LOSS OR DAMAGE TO PERSONAL PROPERTY, OR OTHER CONSEQUENTIAL DAMAGE. THE WARRANTOR SHALL NOT BE LIABLE BY VIRTUE OF THIS WARRANTY OR OTHERWISE FOR DAMAGE TO ANY PERSONS OR PROPERTY, WHETHER DIRECT OR INDIRECT, AND WHETHER ARISING IN CONTRACT OR IN TORT.

Should governmental regulations or industry standards prohibit the Manufacturer from furnishing a comparable model replacement under this warranty, the Owner will be furnished with the closest comparable water heater meeting the then current governmental regulations and industry standards. A supplementary fee may be assessed to cover the additional cost associated with the changes made to meet applicable regulations and standards.

A.O. Smith Water Heaters

IMPORTANT INFORMATION

Model Number _____

Serial Number _____

INSTALLATION INFORMATION

Date Installed _____

Company's Name _____

Street or P.O. Box _____

City, State, and Zip Code _____

Phone Number _____

Plumber's Name _____

A.O.Smith
Water Heaters
www.aosmithwaterheaters.com

NOTES:

A.O.Smith
Water Heaters

A.O.Smith
Water Heaters

www.aosmithwaterheaters.com

THERM-X-TROL®

Thermal Expansion Absorbers, ST-Series (Non-ASME) 150 PSIG Working Pressure

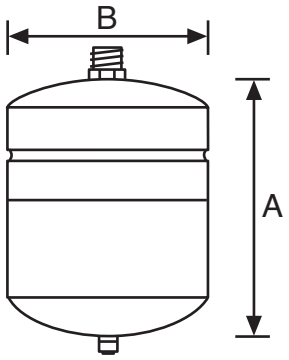

ST-5, ST-8, ST-12

NSF/ANSI 61

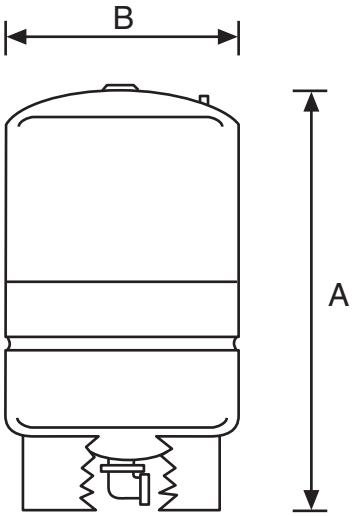

ST-25V through ST-210V

NSF/ANSI 61

In-Line Models

Model No.	Tank Vol.		Max. Accept. Factor	A Height		B Diameter		Sys. Conn.	Ship Wt.	
	Lit.	Gal.		cm	ins.	cm	ins.	NPTM	kg	lbs.
ST-5	8	2.0	0.45	321	12⅝	203	8	¾	2.3	5
ST-8	12.1	3.2	0.59	381	15	229	9	¾	3.2	7
ST-12	17	4.4	0.73	381	15	279	11	¾	4.0	9

Stand Models

Model No.	Tank Vol.		Max. Accept. Factor	A Height		B Diameter		Sys. Conn.	Ship Wt.	
	Lit.	Gal.		cm	ins.	cm	ins.	NPTF	kg	lbs.
ST-25V	39	10.3	1.00	489	19¼	391	15⅜	¾	10.4	23
ST-30V	53	14.0	0.81	605	23⅞	391	15⅜	¾	11.3	23
ST-42V	76	20.0	0.57	802	31⅝	391	15⅜	¾	15.0	33
ST-60V	129	34.0	1.00	913	29⅝	559	22	1¼	27.7	61
ST-80V	167	44.0	0.77	913	36	559	22	1¼	31.3	69
ST-180V	235	62.0	0.55	1186	46¾	559	22	1¼	41.7	92
ST-200V	306	81.0	0.41	1432	56⅜	559	22	1¼	47.0	103
ST-210V	326	86.0	0.54	1199	47¼	660	26	1¼	55.8	123

Maximum Operating Conditions

Operating Temperature	200°F (93°C)
Working Pressure	150 PSIG (10.5 bar)

Specifications

Description	Standard Construction
Standard Factory Pre-charge	40 PSIG (2.8 bar)
System Connection	Stainless Steel
Diaphragm	Butyl
Liner Material	Polypropylene

All dimensions and weights are approximate.
Complies with Low Lead Plumbing Law

Job Name _____

Location _____

_____

_____

Engineer _____

Contractor _____

Contractor P.O. No. _____

Sales Representative _____

Model No. Ordered _____

Submittal data sheets can *ONLY* be ordered as a "Submittal Data Sheet Pack", using *MC# 4400*. They are not available to order on an individual basis, however each data sheet is available on the AMTROL Web Site and can be downloaded and printed for use as needed. For the most updated technical specifications, please download sheet at www.amtrol.com

THERMAL EXPANSION TANKS

FOR POTABLE WATER

INSTALLATION & OPERATION INSTRUCTIONS

AMTROL®

Models ST-5 through ST-210V
Models T-5 through T-12

NOTE: Inspect for shipping damage and notify freight carrier or store where purchased immediately if damage is present. To avoid risk of personal injury and property damage, if the product appears to be malfunctioning or shows signs of corrosion, call a qualified professional immediately. Current copies of the Product manual can be viewed at www.amtrol.com. Use proper safety equipment when installing.

THIS IS THE SAFETY ALERT SYMBOL. IT IS USED TO ALERT YOU TO POTENTIAL PERSONAL INJURY AND OTHER HAZARDS. OBEY ALL SAFETY MESSAGES THAT FOLLOW THIS SYMBOL TO REDUCE THE RISK OF PERSONAL INJURY AS WELL AS PROPERTY DAMAGE.

WARNING **USE ONLY WITH RESIDENTIAL POTABLE WATER SYSTEMS.** Do not operate in a setting with freezing temperatures or where the temperature can exceed **200°F** and do not exceed the maximum working pressure specified for this Product. Do not use on a system with ASME-rated vessels.

WARNING **READ CAREFULLY THE PRODUCT INSTALLATION, OPERATING AND MAINTENANCE MANUAL. FAILURE TO FOLLOW THE INSTRUCTIONS AND WARNINGS IN THE MANUAL MAY RESULT IN SERIOUS OR FATAL INJURY AND/OR PROPERTY DAMAGE, AND WILL VOID THE PRODUCT WARRANTY. THIS PRODUCT MUST BE INSTALLED BY A LICENSED PROFESSIONAL. FOLLOW ALL APPLICABLE LOCAL AND STATE CODES AND REGULATIONS, IN THE ABSENCE OF SUCH CODES, FOLLOW THE CURRENT EDITIONS OF THE NATIONAL PLUMBING CODE AND NATIONAL ELECTRIC CODE, AS APPLICABLE.**

WARNING This Product, like most Products under pressure, may over time corrode, weaken and burst or explode, causing serious or fatal injury, leaking or flooding and/or property damage. To minimize risk, a licensed professional must install and periodically inspect and service the Product. A drip pan connected to an adequate drain must be installed if leaking or flooding could cause property damage. Do not locate in an area where leaking could cause property damage to the area adjacent to the appliance or to lower floors of the structure.

WARNING **RUPTURE OR EXPLOSION HAZARD.** Do not expose Product to freezing temperatures or temperatures in excess of **200°F**. Do not adjust the pre-charge or re-pressure this Product except during installation or regular inspection. Replace the Product and do not adjust the precharge if corroded, damaged or with diminished integrity. Adjustments to pre-charge must be done at ambient temperature only. Failure to properly size the Product or follow these instructions may result in excessive strain on the system and may lead to Product failure, serious or fatal personal injury, leakage and/or property damage.

WARNING A relief valve must be installed to prevent pressure in excess of local code requirement or maximum working pressure designated in the Product Manual, whichever is less. At least once every 3 years or if discharge is present, a licensed professional should inspect the temperature and pressure relief valve and replace if corrosion is evident or the valve does not function. **FAILURE TO INSPECT THIS VALVE AS DIRECTED COULD RESULT IN UNSAFE TEMPERATURE OR PRESSURE BUILD-UP WHICH CAN RESULT IN PRODUCT FAILURE, SERIOUS INJURY OR DEATH AND/OR SEVERE PROPERTY DAMAGE AND VOID THE PRODUCT WARRANTY.**

WARNING **Chlorine & Aggressive Water:** The water quality can significantly influence the life of this Product. You should test for corrosive elements, acidity, total solids and other relevant contaminants, including chlorine and treat your water appropriately to insure satisfactory performance and prevent premature failure.

WARNING This product can expose you to chemicals including lead, which is known to the State of California to cause cancer and birth defects or other reproductive harm. For more information go to www.P65Warnings.ca.gov.

PLEASE READ THE FOLLOWING INSTRUCTIONS CAREFULLY
IMPORTANT GENERAL SAFETY INFORMATION - ADDITIONAL SPECIFIC SAFETY ALERTS APPEAR IN THE FOLLOWING INSTRUCTIONS.

Pre-Installation

1 Ensure expansion tank is sized properly for application (Figure 1).
2. Remove plastic cap from air valve.
3. With tank empty of water, adjust air precharge to match cold water supply pressure.
4. Replace and tighten plastic cap on air valve.
5. ST-5, ST-8, ST-12 only: Insert Turbulator™ into connector.

⚠WARNING FAILURE TO PROPERLY SEAL VALVE CAP WILL RESULT IN LOSS OF PRECHARGE CAUSING PRODUCT TO FAIL.

Installation

1. Install the expansion tank on the cold water supply line to the water heater at a point between the water heater and backflow preventer or other one-way device (Figure 2).

   ⚠WARNING Mount vertically in downward position only. Ensure that tank is supported properly to hold the entire weight of the tank when full of water.

   ⚠WARNING Models ST-25V through ST-210V are floor standing and may not be hung from the piping.
2. Once the expansion tank is installed, check the cold water supply line for any leakage. Make repairs if necessary.
3. Before the initial firing of the water heater, open any hot water fixture and draw water until all air is removed from the system. Turn the water heater temperature control to desired ending temperature (see water heater instructions). Do not set temperature higher than the expansion tank maximum.
4. To relieve initial thermal expansion, momentarily open a hot water faucet. Continue until water heater aquastat temperature is satisfied. Once heater is at its operating range, no further bleeding of expanded water is required.
5. The water heater and expansion tank will now be operational. The expansion tank will control pressure increases caused by thermal expansion to a level below the water heater relief valve setting.

Maintenance

A licensed professional should check the complete system, including the expansion tank, yearly and more frequently as the system ages. Checking the precharge allows a small quantity of air to escape and can result in an insufficient air charge. Always check the precharge while the tank is isolated and empty of water, and be sure to maintain the proper precharge whenever the tank is inspected. Monitor the tip of the indicator cap for discoloration (Figure 3) in addition to regular product inspection. Contact the installer or a plumbing professional if indicator cap is discolored; tank replacement is required. Do not rely on indicator cap as sole means of determining of tank condition.

Figure 3.

InSight™ Service Indicator Cap (ST-5, ST-8 and ST-12 Inline models only)

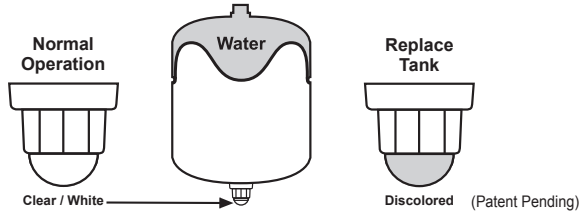

Warranty

ST-5 through ST-12 Models: Seven (7) Year Limited Warranty
ST-25V through ST-210V Models: One (1) Year Limited Warranty
T-5 through T-12 Models: One (1) Year Limited Warranty
Visit www.amtrol.com for complete warranty details.

Figure 1.

Expansion Tank Volume (Gal.) Maximum Temperature Setting 140°F

Water Heater Size (Gals.)	Static Supply Pressure (psig)		
	40	**60**	**80**
40	2.0	2.0	2.0
50	2.0	2.0	2.0
60	3.2	3.2	3.2
80	3.2	3.2	4.4
120	4.4	4.4	10.3

Expansion Tank Volume (Gal.) Maximum Temperature Setting 160°F

Water Heater Size (Gals.)	Static Supply Pressure (psig)		
	40	**60**	**80**
40	2.0	2.0	3.2
50	2.0	3.2	3.2
60	3.2	3.2	4.4
80	3.2	4.4	10.3
120	4.4	10.3	10.3

Expansion Tank Volume (Gal.) Maximum Temperature Setting 180°F

Water Heater Size (Gals.)	Static Supply Pressure (psig)		
	40	**60**	**80**
40	3.2	3.2	3.2
50	3.2	3.2	4.4
60	3.2	4.4	10.3
80	4.4	10.3	10.3
120	10.3	10.3	10.3

Residential sizing based on: 40°F incoming water temperature; 150 psi T&P safety relief valve; Pre-charge equal to static supply pressure.
Models: ST-5, ST-8, ST-12, T-5, T-8, T-12 for residential use only
For larger commercial applications: Visit www.amtrol.com, download the AMTROL App or contact Technical Support at 401.535.1216.

Figure 2.

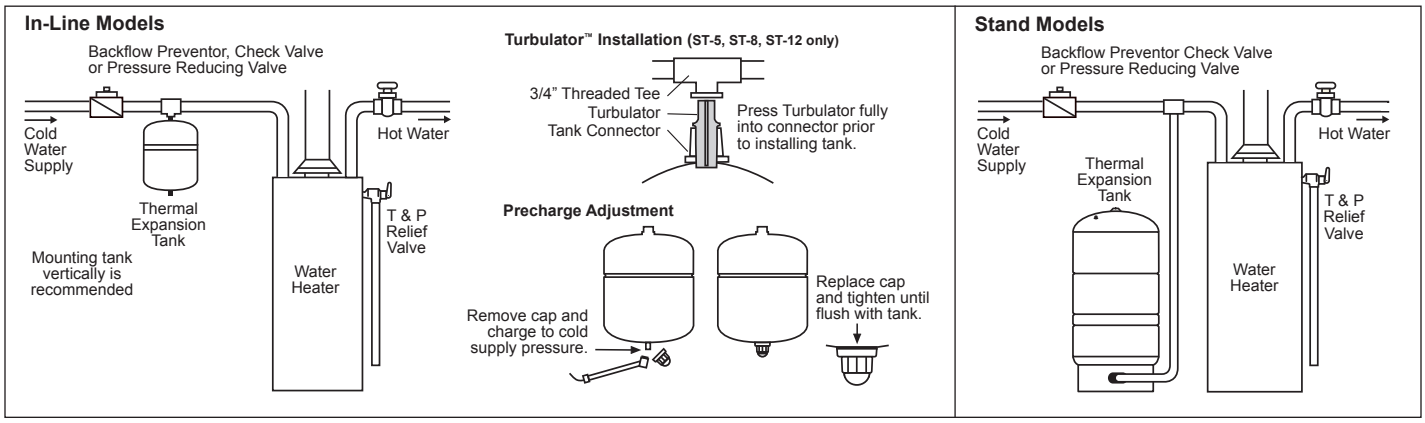

WORTHINGTON INDUSTRIES

1400 Division Road, West Warwick, RI USA 02893
T: 800.426.8765 **www.amtrol.com**

Antimicrobial. Turbulator. InSight. NSF/ANSI 61
PHCC PLUMBING-HEATING-COOLING CONTRACTORS ASSOCIATION
LOW-LEAD UPC C® Models up to 10.3 gallons
LOW-LEAD IAPMO R&T™
MADE IN USA

© 2019 Worthington Industries Inc.
One or more features of this product are covered by U.S. patents, visit www.amtrol.com/patents for more information.

Part #: 9015-942 (01/19)

For Residential, Commercial and Institutional Applications

Job Name _____ Contractor _____

Job Location _____ Approval _____

Engineer _____ Contractor's P.O. No. _____

Approval _____ Representative _____

LEAD FREE*

Series LFMMV

Thermostatic Mixing Valves

Sizes: ½" – 1" (15 – 25mm)

Series LFMMV Thermostatic Mixing Valves maintain and limit mixed hot water to a desired, selectable temperature. The LFMMV series can be set to any temperature between 80°F and 120°F with flow rates as low as 0.5 gpm and as high as 12 gpm (refer to capacity chart on back). This mixing valve series is listed under ASSE 1017 for valves used in hot water source applications, ASSE 1069 for single-pipe, tempered water applications and ASSE 1070 for valves used in individual or multiple fixture applications and also listed IAPMO cUPC. The LFMMVs feature Lead Free* construction to comply with Lead Free* installation requirements.

The LFMMV-M1 uses a double throttling design to control both the hot and cold water supply to the mixed outlet. The superior flow characteristics of this valve provide accurate temperature control (±3°F) with low pressure drop across the rated flow range. As an added feature, the LFMMV-M1 series incorporates integral inlet filter washers and check valves in both the hot and cold water inlets to protect against cross flow.

The LFMMV-M1 is available with either union thread (-UT), union solder (-US), CPVC (-CPVC) Quick-Connect (-QC) or PEX (-PEX) end connectors.

Features

- Lead Free* cast copper silicon alloy body construction
- Solid wax hydraulic principle thermostat assures dependable mixing of hot and cold water
- Thermostat controls both hot and cold water
- Solder, threaded, PEX or CPVC, Quick-Connect end connection models available
- Adjustment cap with locking feature
- ASSE 1017 listed
- ASSE 1069 listed
- ASSE 1070 listed
- IAPMO cUPC listed
- Integral filter washers and check valves

Specifications

A Thermostatic Mixing Valve shall be installed on the hot water supply to fixture. The valve shall be ASSE 1017, ASSE 1069, ASSE 1070 and IAPMO cUPC listed. It shall have a Lead Free* cast copper silicon alloy body. Lead Free* thermostatic valves shall comply with state codes and standards, where applicable, requiring reduced lead content. The valve shall include integral filter washers and check valves and an adjustment cap with locking feature. The valve shall be provided with solder (-US), threaded (-UT), CPVC, (-CPVC) Quick Connect (-QC) or PEX (-PEX) union connections. The valve shall be a Watts Series LFMMV-M1.

***The wetted surface of this product contacted by consumable water contains less than 0.25% of lead by weight.**

Triple Listed!
ASSE 1017, ASSE 1069 & ASSE 1070

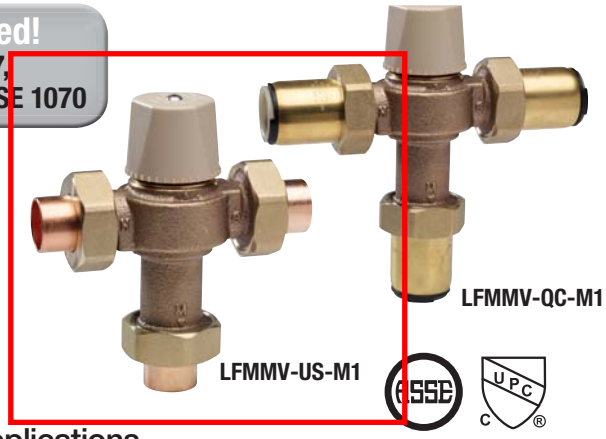

Applications

The LFMMV-M1 Thermostatic Mixing Valves are ideal for supplying sinks, baths, showers or lavatories with tempered water. The LFMMV-M1 valves can be used in residential, commercial and institutional environments. These thermostatically modulated mixing valves can be used anywhere preset water temperature is required for point-of-use installations such as in homes, schools, restaurants, hospitals, beauty salons, and public restrooms. The LFMMV-M1 is provided with an adjustment cap that includes a locking feature.

The LFMMV-M1 valves should be used prior to the fixture to reduce the hot water supply to a safe temperature.

⚠ WARNING

When used in an ASSE 1017 application at the hot water source, the Watts Thermostatic Mixing Valve Series LFMMV cannot be used by itself to control final temperature at fixtures where ASSE Standard 1016 or ASSE Standard 1070 listed devices are required. Such use may result in severe bodily injury (i.e. scalding or chilling) and/or death. ASSE Standard 1016, ASSE 1069 or ASSE Standard 1070 listed devices, such as Watts Series LFUSG, LFL111 or LFMMV, should be used at point-of-use to prevent possible injury. Consult all product manuals, and instruction guides before installing any referenced product.

Recirculation systems should recirculate water at temperatures over 140°F to reduce the risk of bacterial growth in the piping. This valve should not be used at the hot water source in recirculation systems.

⚠ WARNING

Water temperatures in excess 110ºF (43ºC) are dangerous and may cause scalding, severe injury or death! This valve can be adjusted to deliver water at temperatures exceeding 110ºF (43ºC). Consequently, when used in an ASSE 1016, ASSE 1069 or ASSE 1070 application, the installer must check the mixed water outlet temperature at the point of use and adjust the Watts Thermostatic Mixing Valve Series LFMMV to ensure delivery of water at a safe temperature not exceeding 110ºF (43ºC). Mechanical valves are not fail-safe. Due to the effects of various water conditions, periodic verification of outlet water temperature is required.

Watts product specifications in U.S. customary units and metric are approximate and are provided for reference only. For precise measurements, please contact Watts Technical Service. Watts reserves the right to change or modify product design, construction, specifications, or materials without prior notice and without incurring any obligation to make such changes and modifications on Watts products previously or subsequently sold.

WATTS®

Materials

Body:	Lead Free* cast copper silicon alloy
Disc:	Stainless steel
Thermostat Assembly:	Copper
O-rings:	Buna-N; EPDM
Pistons:	Polysulfone (PSU)
Springs:	Stainless Steel

Pressure — Temperature — Flow Rate

Minimum Supply Pressure Static: 30psi (207 kPa)

Inlet Temperatures: hot inlet, 120°F – 180°F (49°C – 82°C), cold inlet, 39°F – 85°F (4°C – 29°C)

Hot Water Inlet to Outlet Differential Temperature: 5°F (3°C) above set point

Temperature Out: Field range: 80°F – 120°F (27°C – 49°C), adjustable. Accurate within ±3°F (1.7°C)

Maximum Temperature: 200°F (93°C)

Maximum Pressure: 150psi (1034 kPa)

Minimum Flow: 0.5 gpm (1.9 lpm) @ 0.8psi (0.55 kPa)†

Maximum Flow: 20 gpm (76 lpm) @ 125psi (862 kPa)†

Maximum Pressure Differential between Hot & Cold Water Supplies: 25%

Listing: ASSE 1017, ASSE 1069, ASSE 1070 and IAPMO cUPC

† When tested in accordance with ASSE 1017, ASSE 1069 & ASSE 1070.

Capacity**

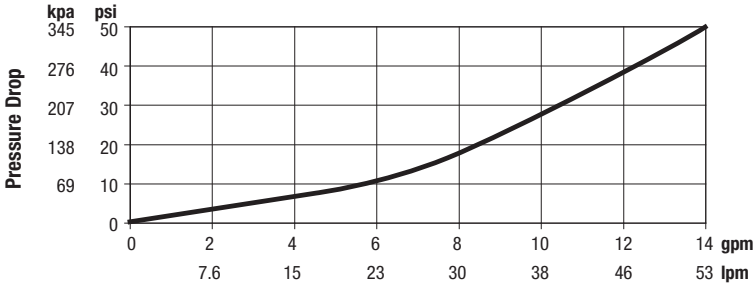

Flow

Flow curves are for reference. Actual flows may vary depending on system temperatures and/or pressures.

***Flow curve with integral inlet filters and check valves*

Basic Construction

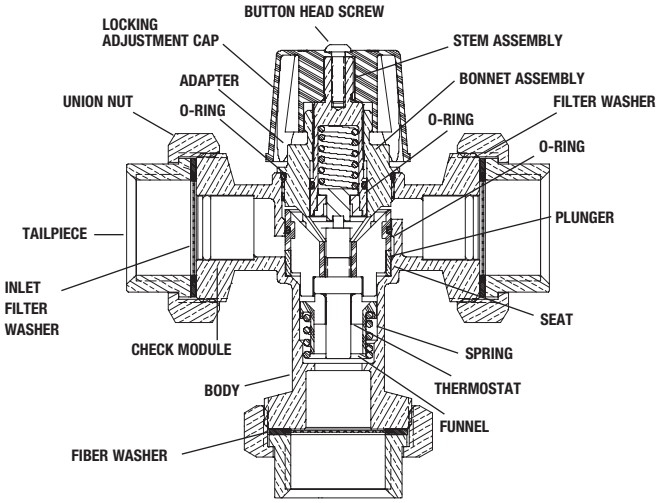

Dimensions — Weights

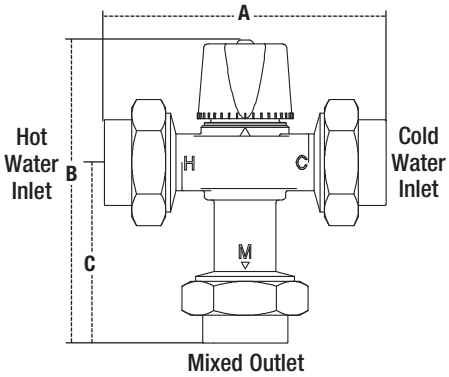

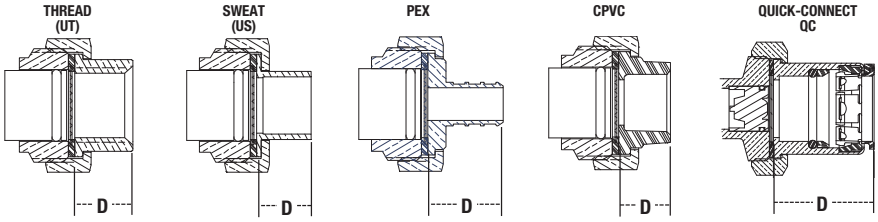

SIZE (DN)		MODEL	DIMENSIONS								WEIGHT	
			A		B		C		D			
in.	mm		in.	mm	in.	mm.	in.	mm	in.	mm	lbs.	kg.
½	15	LFMMV-UT-M1	4⅞	124	5 7/16	137	3 3/16	80	⅝	16	1.8	0.8
¾	20		4⅞	124	5 7/16	137	3 3/16	80	⅝	16	2.4	1.1
1	25		5 5/16	135	5⅝	143	3⅜	86	¾	20	3.0	1.4
½	15	LFMMV-US-M1	4 13/16	123	5⅜	137	3⅛	80	⅝	15	1.7	0.8
¾	20		5 5/16	135	5⅝	143	3⅜	86	⅞	22	2.3	1.0
1	25		5 13/16	148	5⅞	149	3⅝	92	1⅛	28	2.9	1.3
½	15	LFMMV-PEX-M1	5¼	133	5 9/16	142	3 5/16	85	13/16	21	1.8	0.8
¾	20		5½	140	5 11/16	145	3 7/16	88	15/16	24	2.5	1.1
1	25		5⅞	149	5⅞	150	3⅝	93	1⅛	29	3.1	1.4
½	15	LFMMV-CPVC-M1	4¾	121	5 5/16	136	3 1/16	79	9/16	14	1.6	0.7
¾	20		5¼	133	5 9/16	142	3 5/16	85	13/16	21	2.2	1.0
1	25		5 11/16	144	5 13/16	147	3 9/16	90	1	26	2.6	1.2
½	15	LFMMV-QC-M1	6⅝	168	6¼	159	4	102	1½	38	2.1	0.9
¾	20		6 15/16	177	6 7/16	163	4 3/16	106	1 11/16	42	2.8	1.3
1	25		7⅛	181	6½	165	4¼	108	1¾	44	3.5	1.6

WATTS®

A Watts Water Technologies Company

USA: Tel: (978) 688-1811 • Fax: (978) 794-1848 • www.watts.com

Canada: Tel: (905) 332-4090 • Fax: (905) 332-7068 • www.watts.ca

© 2013 Watts

LITHONIA LIGHTING®

Catalog Number	
Notes	
Type	

FEATURES & SPECIFICATIONS

INTENDED USE — The OLWP provides years of maintenance-free general illumination for commercial or residential outdoor applications such as driveways, patios, loading areas and warehouses.

CONSTRUCTION — Rugged cast-aluminum, corrosion-resistant rear mounting plate.

Impact resistant polycarbonate front cover/diffuser resists fading and cracking.

Driver operates at 120V.

Operating temperature -40°C to 40°C.

OPTICS — High-performance LEDs maintain 70% of light output at 50,000 hours of service. (LED lifespan based on IESNA LM-80-08 results and calculated per IESNA TM-21-11 methodology.)

Lenses are engineered for superior lighting distribution, uniformity and fixture spacing.

See Lighting Facts Labels for specific fixture performance.

INSTALLATION — Designed for wall mounting more than 4' above the ground. Mounts to a recessed junction box (by others).

LISTINGS — UL Listed to US and Canadian safety standards for wet locations.

WARRANTY — 5-year limited warranty. Complete warranty terms located at: www.acuitybrands.com/CustomerResources/Terms_and_conditions.aspx

Note: Actual performance may differ as a result of end-user environment and application.

All values are design or typical values, measured under laboratory conditions at 25 °C.

Specifications subject to change without notice.

Outdoor General Purpose

OLWP

LED WALL PACK

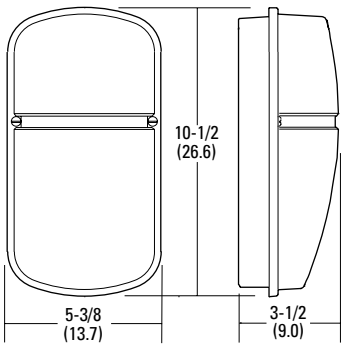

All dimensions are inches (centimeters) unless otherwise indicated.

ORDERING INFORMATION All configurations of this product are considered "standard" and have short lead times.

Example: OLWP LED P1 40K 120 PE DDB

Series	Lumens / Color temperature (CCT)[1]	Voltage	Control	Finish
OLWP LED	**P1 40K** 1414 lumens / 4000K	**120** 120V	**PE** Button photocell	**DDB** Dark Bronze

Notes

1 Nominal Correlated Color Temperature (CCT) per ANSI C78.377-2008.

PHOTOMETRIC DIAGRAMS

To see complete photometric reports or download .ies files for this product,visit the OLWP home page on www.Lithonia.com. Tested in accordance with IESNA LM-79 and LM-80 standards.

OLWP 11

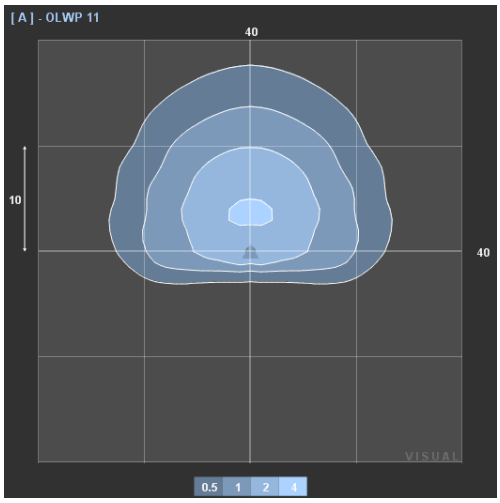

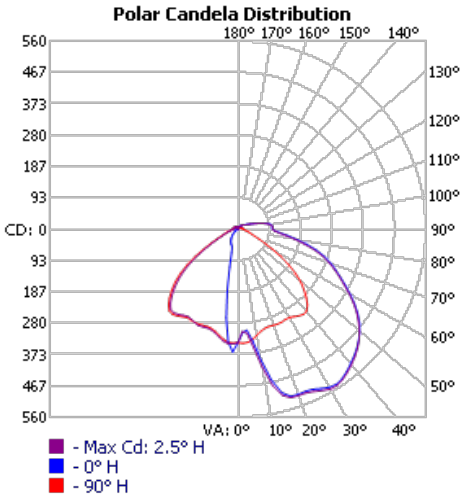

© 2013-2019 Acuity Brands Lighting, Inc. All rights reserved. Rev. 08/07/19

LITHONIA LIGHTING®

Catalog Number	
Notes	
Type	

LED Vapor Tight

XVML

FEATURES & SPECIFICATIONS

INTENDED USE — Ideal for damp/wet locations such as outdoor venues, canopies and locker rooms. **Certain airborne contaminants can diminish the integrity of acrylic and/or polycarbonate.** **Click here for Acrylic and Polycarbonate Environmental Compatibility table for suitable uses.**

CONSTRUCTION — Light gray, fully gasketed, polycarbonate housing with ten polycarbonate captive latches provides a watertight seal. The high-impact resistant housing and extruded silicone rubber gasket protects the internal components from the environment, including moisture and dirt. 3/8" wet location fitting provided on the 3500LM fixture and 1/2" wet location fitting provided on the 5000LM fixture on one end for use with liquid tight conduit. The housing dimensions vary based on the lumen package selected. See DIMENSIONS drawings on page 2 for details. Polycarbonate latches (included) deter tampering, by accommodating #6-32x3/8" tamper resistant fasteners (not provided). Grade 301 stainless steel latches (available separately) deter tampering, by accommodating #8-32x1/2" tamper resistant fasteners (not provided).

OPTICS — UV-stabilized, high-impact, frosted polycarbonate lens for uniform light output and high-impact resistance.

ELECTRICAL — High-efficiency LEDs. 0-10V dimming standard for a dimming range of 100% to 10%. 3kV Ring, 2kV Combo level of surge protection is standard.

INSTALLATION — Mounting hardware for surface mounting to ceiling or wall (horizontally or vertically) included. Mounting hardware kit also includes hooks for suspended mount (chain not included). Optional 45° corner angle bracket mount and junction mount kit also available. Maximum of 15 units or 6A for through wiring connection or daisy chain type installation. Tool-less access for installation.

LISTINGS — UL/C-UL listed to US and Canadian Safety Standards. For use in wet locations under covered ceilings. For use in ambient temperatures from -4°F (-20°C) to 104°F (40°C). IP65 and IP66 rated when ceiling, suspended, wall or corner mounted. Junction Box mount rated IP65. This unit meets FCC Non-Consumer Class A (277v) and Consumer Class B (120V) limits.

DesignLights Consortium® (DLC) qualified product. Not all versions of this product may be DLC qualified. Please check the DLC Qualified Products List at www.designlights.org/QPL to confirm which versions are qualified.

WARRANTY — 5-year limited warranty. Complete warranty terms located at: www.acuitybrands.com/CustomerResources/Terms_and_conditions.aspx

Note: Actual performance may differ as a result of end-user environment and application. All values are design or typical values, measured under laboratory conditions at 25 °C. Specifications subject to change without notice.

ORDERING INFORMATION

Catalog number	Lumens	Voltage	Color temperature	Standard carton quantity
XVML L48 3500LM MVOLT 40K 80CRI	3500LM	MVOLT (120-277)	4000K, 80CRI	1
XVML L48 3500LM MVOLT 50K 80CRI	3500LM	MVOLT (120-277)	5000K, 80CRI	1
XVML L48 5000LM MVOLT 40K 80CRI	5000LM	MVOLT (120-277)	4000K, 80CRI	1
XVML L48 5000LM MVOLT 50K 80CRI	5000LM	MVOLT (120-277)	5000K, 80CRI	1

Accessories: *Order as separate catalog number.*

XVML LATCH STSL	Stainless steel latch kit (Set of 10)[1]
XVMLJSB	Junction box mount[2]
XVMLANGBKT45	Angle mount bracket[3]

Notes

1 To deter tampering, stainless steel latches can accommodate #8-32x1/2" tamper resistant fasteners (not provided). Kit includes 10 latches.

2 IP65 rated. Not compatible with angle mount bracket. Required to be used in center of fixture with supplied brackets for additional mounting support.

3 For use with applications where ceiling meets wall at a 90° angle. See drawing on page 3 for more information.

DIMENSIONS

All dimensions are in inches unless otherwise indicated.

WEIGHT AND PALLET QUANTITY		
	3500LM	**5000LM**
Dimensions (in inches)	47 13/16" x 3 ¼" x 2 7/8"	47 13/16" x 4 1/2" x 3"
Weight	4.4 lbs (2.0 kgs)	6.1 lbs (2.8 kgs)
Pallet Quantity	144	99
Wet Location Fitting Size (in inches)	3/8"	1/2"
Mounting hole spacing range (in inches)	29-5/8"- 33-1/4"	29-5/8"- 33-1/4"
	Polycarbonate latches (standard latch)	**Stainless Steel (optional accessory)**
Tamper Resistant Fasteners Size needed (not included)	#6 - 32x3/8	#8 - 32x1/2

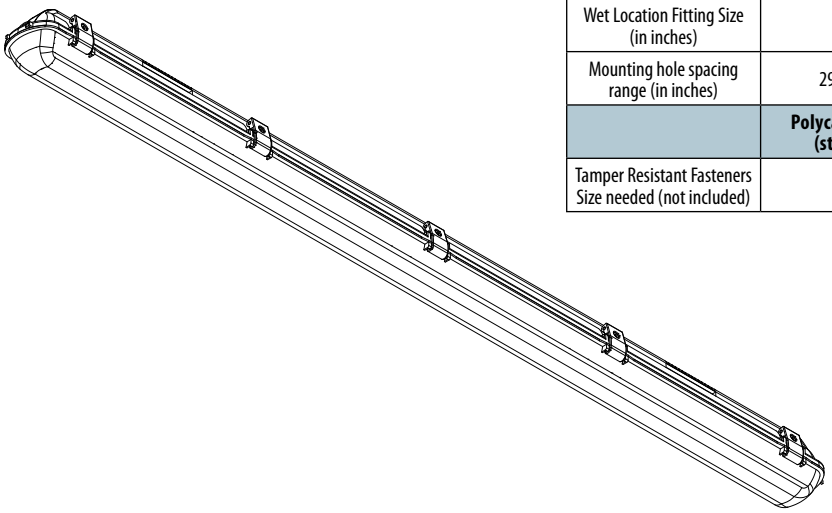

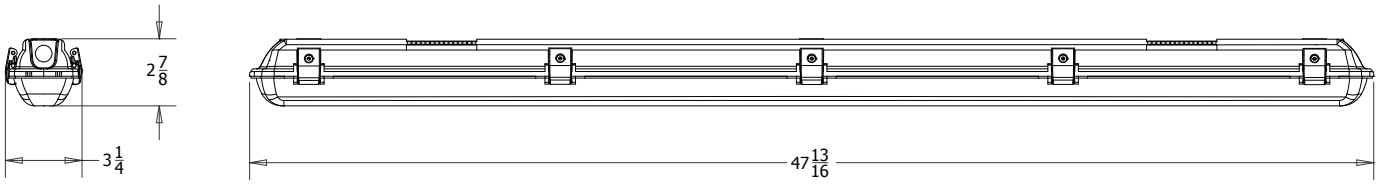

XVML L48 3500LM

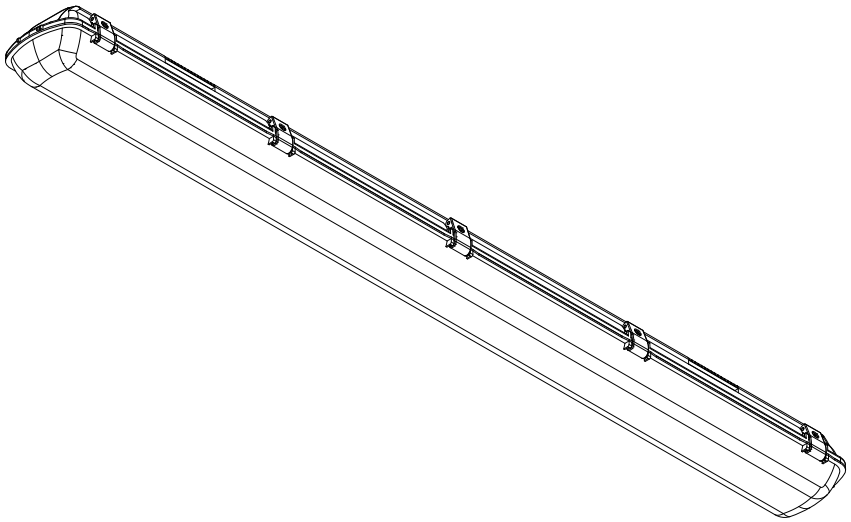

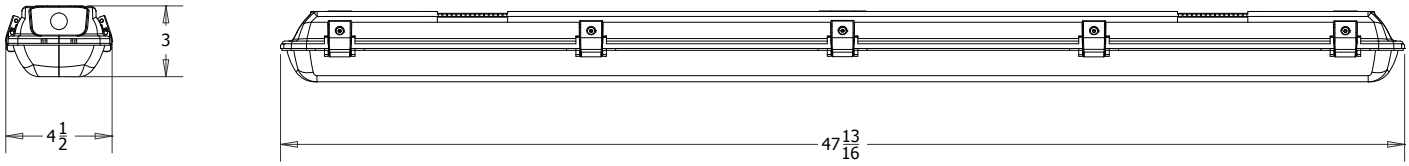

XVML L48 5000LM

INDUSTRAL: One Lithonia Way, Conyers, GA 30012 Phone: 800-315-4963 Fax: 770-929-8799 www.lithonia.com

© 2017 Acuity Brands Lighting, Inc. All rights reserved. Rev. 02/06/18

DIMENSIONS

All dimensions are in inches
unless otherwise indicated.

Accessories: *Order as separate catalog number.*

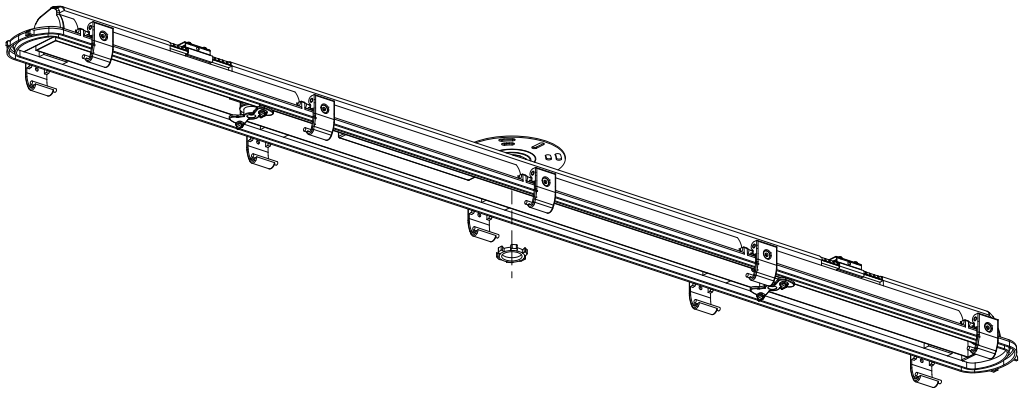

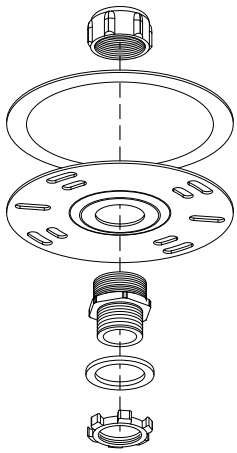

XVMLJSB

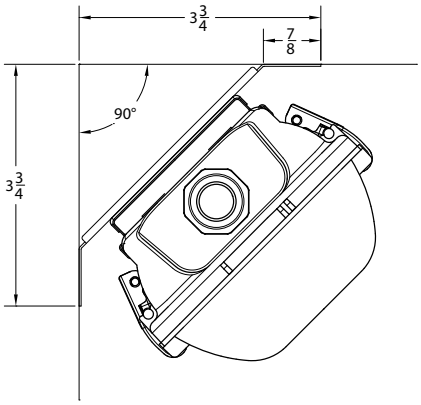

XVMLANGBKT45

OPERATIONAL DATA

XVML L48 3500LM MVOLT (80CRI)				
	Lumens	Wattage	LPW	Comparable Light Source
40K	3,558	33	106.6	2 - 32T8 lamps
50K	3,642		110.4	

XVML L48 5000LM MVOLT (80CRI)				
	Lumens	Wattage	LPW	Comparable Light Source
40K	5,365	49	109.6	3-32T8 Lamps, 2-54T5HO lamps
50K	5,534		112.9	

PHOTOMETRICS

See www.lithonia.com.

INDUSTRAL: One Lithonia Way, Conyers, GA 30012 Phone: 800-315-4963 Fax: 770-929-8799 www.lithonia.com

© 2017 Acuity Brands Lighting, Inc. All rights reserved. Rev. 02/06/18

SMS500

Wall or ceiling mount to control 500 Watts incandescent or 100 Watts Fluorescent lighting. Vandalproof lens. Full 180° view . Cover not included.

Color: Bronze Weight: 0.5 lbs

Project:	Type:
Prepared By:	Date:

Technical Specifications

Listings

UL Listing:

Suitable for wet locations.

Construction

Compatibility:

Compatible with most electronic ballasts. Not compatible with instant start ballasts.

Electrical

Voltage:

120 volts AC 60 Hz.

Manual Override:

Double flip wall switch logic prevents activation by brief power outages. Resets after 6 hours. No extra wiring needed.

Surge Protection:

Withstands up to 3000 volts.

RF Immunity:

Circuits fully shielded for maximum radio frequency immunity.

Incandescent Watts Switched:

500 watts @ 120 volts.

Fluorescent Watts Switched:

250 watts @ 120 volts.

Power Consumption:

Negligible

Manual Switch:

None.

Switching Capacity:

Relay On/Off Model Switches 240 watts when lights are mounted to sensor. 500 watts Incandescent or 240 watts Fluorescent of remotely mounted lighting @ 120 volts.

Sensor Characteristics

Time Adjustment:

5 seconds to 15 minutes.

Quick Test Time:

5 second test time for fast installation. Works day or night.

Time Delay:

5 seconds to 15 minutes.

Ambient Light Sensing:

Adjustable.

Detection:

180° detection pattern.

Other

"No Hands" Auto Testing:

Auto mode starts after 4 minutes of testing. No adjustment needed.

Photoelectric Control:

Deactivates lights during daylight. Fully adjustable for 24 hour operation or custom applications.

Ratings:

5 amps.

Adjustments:

Time, ambient light & sensitivity.

Warranty:

5 year sensor warranty.

LED Characteristics

LED Detection Indicator:

LED glows red day & night for "on guard" deterrence.

Copyright © 2014 RAB Lighting Inc. All Rights Reserved Note: Specifications are subject to change at any time without notice

SMS500

Dimensions

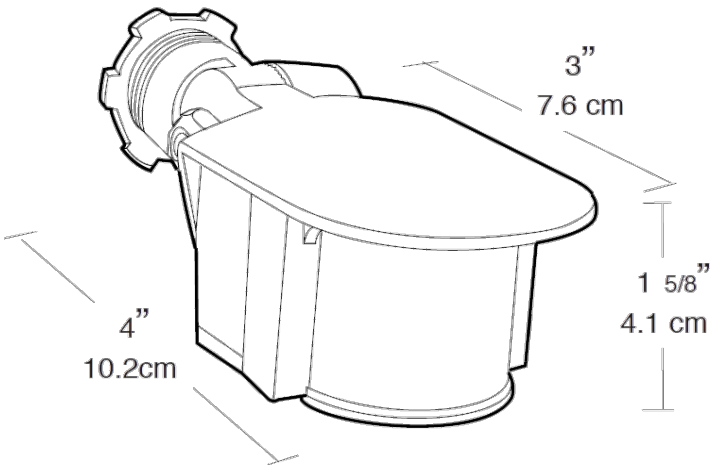

Features

- Surge protected
- 180°detection pattern
- Quick installation with 5 second test time and auto test logic
- LED "on guard" indicator
- Protected manual override with auto reset after 8 hours or at dawn

Copyright © 2014 RAB Lighting Inc. All Rights Reserved Note: Specifications are subject to change at any time without notice

Features, Benefits and Functions

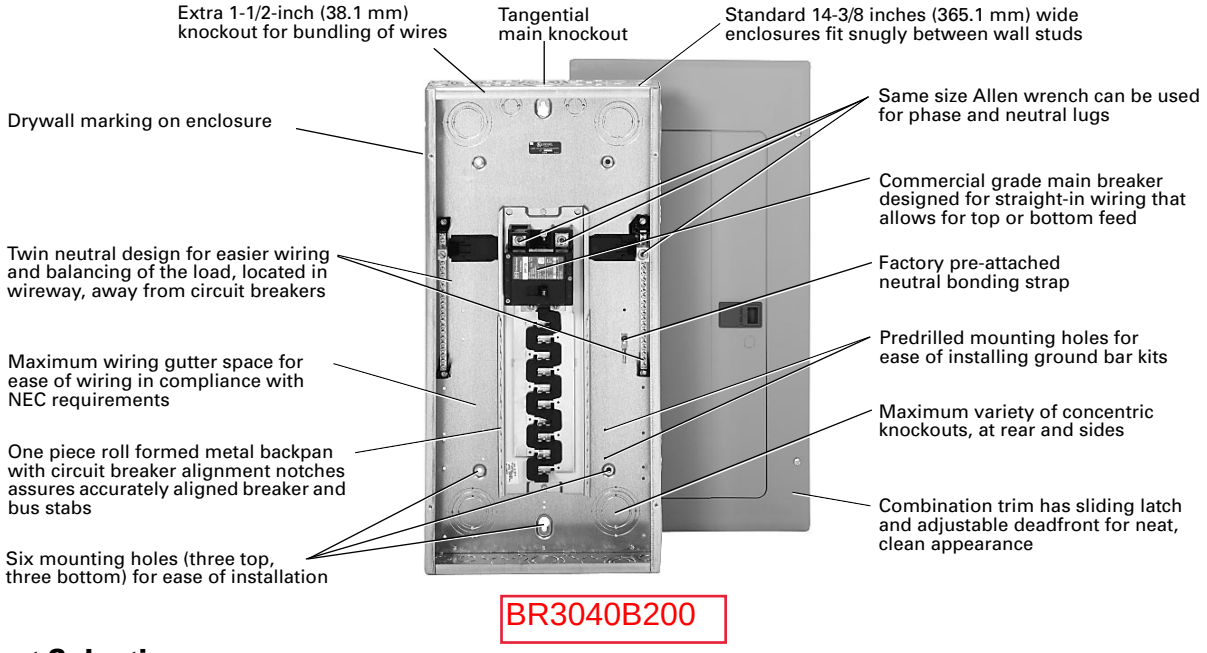

Product Selection

Table 3-64. BR Loadcenter Selection Chart

Service	■ Single-phase, three-wire, 120/240V AC	■ Three-phase, four-wire, 208Y/120V AC ■ Three-phase, three-wire, 240V AC delta
Short Circuit Current Rating	■ 10,000 AIC: All single- and three-phase loadcenters 70 through 225 amperes, 8 to 42 circuits. ■ 22,000 AIC: All convertible loadcenters using 125 amperes rated Type BRH main breakers or selected factory installed 125 ampere rated Type BRH main breaker.	■ 25,000 AIC: All convertible and factory installed single-phase loadcenters rated 150 and 200 amperes using Type BWH main breakers.
Main Breaker/Main Lug Loadcenters	Single-Phase ■ Main Breaker: 100, 125, 150, 200, 225, 400, 600 amperes. ■ Main Lugs: 70, 125, 150, 200, 225, 400, 600 amperes.	Three-Phase ■ Main Breaker: 100, 125, 150, 200, 225, 400, 600 amperes. ■ Main Lugs: 100, 125, 150, 200, 225, 400, 600 amperes.
Convertible Loadcenters	■ Main Breaker: Single-phase up to 200 amperes and three-phase up to 225 amperes ■ Main Lugs: Single-phase up to 200 amperes and three-phase up to 150 amperes	
Branch Breakers	■ Types BR, BRH, and BRH: 10 to 125 amperes. One-, two-, and three-pole. Selected amperages available in switching duty, HACR, shunt trip, and high magnetic setting. ■ Type GFCB: 15 to 50 amperes. One- and two-pole ground fault breakers. ■ Types BJ, and BJH: 125 to 225 amperes Two- and three-pole. ■ Type BD Twin: 10 to 50 amperes Two of one-pole. Take one 1-inch (25.4 mm) space.	■ Type BQ and BQC Multibreaker: 15 to 30 amperes. Two of two-pole or one two-pole and two one-pole. Takes two 1-inch (25.4 mm) spaces. ■ Type BRW: 15 to 30 amperes. Two-pole water heater breakers. ■ Type BRSN: 15 to 30 amperes. Two-pole switching neutral breakers. ■ Type BR 15 to 100 amperes. Two-pole, 240V AC delta breakers. ■ BR-AFCI arc fault circuit interrupter.
Enclosures	■ NEMA Type 1 indoor. ■ NEMA Type 3R outdoor.	■ Meets or exceeds UL requirements for indoor or outdoor applications
Loadcenter and Breaker Accessories	■ Branch Circuit Breaker Auxiliary components. Hold Down Kits. Handle ties. Lockoffs. Lockdogs. ■ Complete Line of Ground Bar Kits 5, 10, 14, and 21 circuit, some with additional #2/0 lugs. Each terminal will accommodate: (3) #14 – #10 Cu/Al or (1) #14 – #4 Cu/Al ■ Main and Sub-feed Lugs 125, 150, 225 amperes — two- and three-pole. ■ Shunt Trips	■ Surge Protection Single-phase plug-on surge protector. Single-phase bottle type surge protector. Three-phase bottle type surge protector. Single-phase whole home surge protector. ■ Universal Rainproof Conduit Hubs Group One: 3/4, 1, 1-1/4, 1-1/2, 2 inches (19.1, 25.4, 31.8, 38.1, 50.8 mm) Group Two: 2, 2-1/2, 3 inches (50.8, 63.5, 76.2 mm) Adapter plate.
Bussing	■ Tin-plated aluminum as standard. ■ Some copper bus panels available.	

Single-Phase — Main Circuit Breaker Loadcenters 10,000/25,000 Amperes Interrupting Capacity

Table 3-70. Single-Phase, 3-Wire — 120/240 Vac — Factory Bonded Split Neutral

Main Breaker Type	Main Ampere Rating	Maximum Number 1-Inch (25.4 mm) Space	Maximum Number 1-Inch (25.4 mm) Circuits	Enclosure Type	Box Size	Wiring Diagram Figure Number	Wire Size Range Cu/Al 60°C or 75°C for Main Breaker	Loadcenter Catalog Number with Combination Cover ①	Price U.S. $
BR 10 kAIC	100	20	20	Indoor	C2	68	#4 – 1/0	**BR2020B100**	
	100	16	24	Indoor	C1	69		**BR1624B100**	
BWH 25 kAIC	150	30	30	Indoor	G1	70	#2 – 300 kcmil	**BR3030B150**	
	200	20	40	Indoor	D1	71	#2 – 300 kcmil	**BR2040B200**	
	200	30	40	Indoor	G1	72		**BR3040B200**	
	200	40	40	Indoor	L1	70		**BR4040B200**	

① Combination style covers may be used in surface or flush applications.

Note: All main circuit breaker loadcenters are listed for use as service entrance equipment. Loadcenters are factory bonded for service entrance applications. Remove bonding strap for separate neutral and ground bars for sub-feed applications

Table 3-71. Single-Phase 3-Wire — 120/240 Vac — Insulated/Bondable Neutral

Main Breaker Type	Main Ampere Rating	Maximum Number 1-Inch (25.4 mm) Spaces	Maximum Number 1-Inch (25.4 mm) Circuits	Enclosure Type	Box Size	Wiring Diagram Figure Number	Wire Size Range Cu/Al 60°C or 75°C for Main Breaker	Loadcenter Catalog Number with Combination ② or NEMA Type 3R Cover	Price U.S. $
BR 10 kAIC	100	8	16	Indoor	B1	17	#4 – 1/0 ③	**BR816B100**	
		10	20	Indoor	A1	65		**BR1020B100S11**	
		10	20	Indoor	A1	65		**BR1020B100F11**	
		10	20	Outdoor	B2R	59		**BR1020B100RF** ④⑤	
		12	12	Indoor	B2	5		**BR1212B100**	
		12	20	Indoor	B2	19		**BR1220B100**	
		12	24	Outdoor	B2R	17		**BR1224B100R** ⑤	
		16	16	Indoor	C1	5		**BR1616B100**	
		16	20	Indoor	C1	60		**BR1620B100**	
		16	24	Outdoor	C1R	24		**BR1624B100R** ⑤	
		20	24	Outdoor	C3R	10		**BR2024B100R** ⑤	
		30	30	Indoor	⑥	⑥	⑥	⑥	
	125	16	24	Indoor	C1	24	#4 – 2/0	**BR1624B125**	
		20	24	Indoor	C1	10		**BR2024B125**	
		20	24	Outdoor	C3R	10		**BR2024B125R** ⑤	
BRH ⑦ 22 kAIC	100	20	24	Indoor	C2	10	#2/0 – 300 kcmil	**BR2024H100** ⑦	
BWH ⑧ 25 kAIC	150	8	16	Outdoor	C3R	18	#2 – 300 kcmil	**BR816B150RF** ④⑤	
		16	30	Indoor	C4	25		**BR1630B150**	
		20	30	Indoor	C4	26		**BR2030B150**	
		20	30	Outdoor	D1R	26		**BR2030B150R** ⑤	
		20	40	Indoor	D1	29		**BR2040B150**	
		20	40	Outdoor	D1R	29		**BR2040B150R** ⑤	
		24	30	Indoor	G1	27		**BR2430B150**	
		30	30	Outdoor	G1R	28		**BR3030B150R** ⑤	
		30	40	Indoor	G1	30		**BR3040B150**	
	200	4	8	Outdoor	8R	46	#2 – 300 kcmil	**BR48B200RF** ④⑨⑩	
		8	16	Outdoor	C3R	18		**BR816B200RF** ④⑤	
		16	32	Indoor	C4	29		**BR1632B200**	
		20	40	Outdoor	D1R	29		**BR2040B200R** ⑤	
		24	40	Indoor	G1	61		**BR2440B200**	
		30	40	Outdoor	G1R	30		**BR3040B200R** ⑤	
		40	40	Outdoor	L1R	28		**BR4040B200R** ⑤	
	225	42	42	Indoor	L2	31	#1 – 250 kcmil	**BR4242B225**	
		42	42	Outdoor	L2R	31		**BR4242B225R** ⑤	

② Combination style covers may be used in surface or flush applications.
③ Wire range size for BR1020B100SP is #6 – #1 Cu/Al.
④ Includes through-feed lugs for both phase and neutral conductors.
⑤ Rainproof panels are furnished with hub closure plates. For rainproof hubs, refer to **Page 3-63**.
⑥ See Copper Bus Offering, **Page 3-55**.
⑦ 22 kAIC series combination rating is obtained when Types BD, BR, BQ, BQC and GFCB 10 kAIC branch breakers are used in series with Type BRH main breaker.
⑧ 25 kAIC series combination rating is obtained when Types BD, BR, BQ, BQC and GFCB 10 kAIC branch circuit breakers are used in series with Type BWH main breaker.
⑨ Supplied with adapter plate to use DS Group1 hubs on **Page 3-63**. If 2.50-inch (63.5 mm) hub is needed, remove adapter and use ARP00007CH25 hub.
⑩ Neutral is bonded — suitable for service entrance only — cannot be converted for sub-feed application.

Note: All main circuit breaker loadcenters are listed for use as service entrance equipment and are shipped with neutral bonding strap preattached. The maximum rating of the panel is the main circuit breaker rating when used as service entrance equipment. Ground bar kits priced separately. See **Page 3-64**.

Box Sizes . . . . . **Pages 3-77** through **3-79**
Discount Symbol **22C**

Instructional Leaflet **IL00300001Y** Effective February 2014

Installation instructions for Type CH and BR loadcenters

Instrucciones para la instalación de centros de carga tipos CH y BR

Congratulations!

You have purchased an Eaton loadcenter, which includes many features recommended by electrical contractors, resulting in a product that is easier to mount and wire.

⚠ WARNING

TURN OFF OR DISCONNECT THE POWER SUPPLYING THIS EQUIPMENT BEFORE BEGINNING WORK. THIS MAY REQUIRE THAT YOU CONTACT YOUR ELECTRIC UTILITY TO DISCONNECT POWER TO AN EXISTING LOADCENTER. THE LINE SIDE OF THE MAIN BREAKER IS ENERGIZED UNLESS POWER IS DISCONNECTED UPSTREAM. EATON WILL NOT ASSUME RESPONSIBILITY FOR PROPERTY DAMAGE OR PERSONAL INJURY RESULTING FROM MISUSE OF THE INFORMATION IN THIS PUBLICATION.

⚠ WARNING

EATON STRONGLY RECOMMENDS THAT THESE PRODUCTS BE INSTALLED BY A QUALIFIED ELECTRICAL PROFESSIONAL.

IMPORTANT

INSTALL EQUIPMENT IN CONFORMANCE WITH CODES.

This product must be installed in accordance with the National Electrical Code® (NEC®) or the Canadian Electrical Code (CEC) and any applicable local codes. Before installing equipment, check with your local electrical inspector for requirements and information. If you have questions or need assistance, contact a qualified electrical contractor.

¡Felicidades!

Usted ha comprado un centro de carga Eaton que incluyen varias características recomendadas por contratistas eléctricos y que resultan en un producto fácil de montar y cablear.

⚠ ¡ADVERTENCIA!

ANTES DE INICIAR UN TRABAJO, APAGUE O DESCONECTE EL SUMINISTRO DE ENERGÍA QUE ALIMENTA ESTE EQUIPO. ESTO PODRÍA REQUERIR QUE USTED CONTACTARA A SU EMPRESA ELÉCTRICA PARA DESCONECTAR LA ENERGÍA ELÉCTRICA QUE ALIMENTA A UN CENTRO DE CARGA EXISTENTE. EL LADO DE LA LÍNEA DE LOS INTERRUPTORES PRINCIPALES ESTÁ ENERGIZADO, A MENOS QUE LA ENERGÍA ELÉCTRICA SE DESCONECTE DE ARRIBA. EATON NO ASUMIRÁ RESPONSABILIDAD ALGUNA POR LOS DAÑOS MATERIALES CAUSADOS NI POR LAS LESIONES PERSONALES QUE RESULTEN COMO CONSECUENCIA DEL MAL USO DE LA INFORMACIÓN QUE CONTIENE ESTE PUBLICACIÓN.

⚠ ¡ADVERTENCIA!

EATON RECOMIENDA QUE LA INSTALACIÓN DE ESTOS PRODUCTOS SEA REALIZADA POR UN ELECTRICISTA PROFESIONAL CALIFICADO.

IMPORTANTE

INSTALE EL EQUIPO DE ACUERDO CON LOS CÓDIGOS APLICABLES.

Este producto debe instalarse de acuerdo con el Código Eléctrico Estadounidense (NEC) o el Código Eléctrico Canadiense (CEC) y todos los códigos locales aplicables. Antes de instalarlo, solicite a un inspector eléctrico local los requisitos e información necesarios para realizar dicha instalación. Si tiene preguntas o necesita ayuda, contacte a un contratista eléctrico calificado.

EATON

Powering Business Worldwide

1 Remove backpan (optional)

Remove backpan if desired for wiring or pulling cables by (1) removing top mounting screw and (2) loosening bottom mounting screw. Backpan can then be lifted out. Replace after pulling conductors into enclosure.

Retire la placa de montaje (opcional)

Si lo desea, retire la placa de montaje para realizar el cableado o para acomadar los cables. Hágalo de la siguiente manera: (1) quite el tornillo de montaje superior y (2) afloje el tornillo de montaje inferior. La placa de montaje estará lista para sacarse. Colóquelo nuevamente en su lugar después de pasar los conductores y colocarlos dentro del receptáculo.

2 Remove enclosure knockouts

Remove only those knockouts required for installation of cable clamps or conduit. Remove center knockout (top or bottom) by (1) driving inward, (2) prying up or driving in the rings one at a time, and (3) using pliers to bend rings back and forth until detached. Knockouts are used to pull cable into enclosure. To prevent damage to insulation, use only approved clamps, conduit, and fittings.

Retire los orificios ciegos del receptáculo

Retire solamente aquellos orificios ciegos que se necesitan para la instalación de los conectores o conductos para cables. Retire el orificio ciego central (superior o inferior) mediante (1) un movimiento hacia adentro, (2) palanqueando hacia arriba o empujando hacia adentro los anillos de a uno por vez, y (3) utilizando unas pinzas para doblar los anillos de un lado a otro hasta que se desprendan. Los orificios ciegos se usan para pasar los cables hacia adentro del receptáculo. Para evitar que el aislamiento se dañe, use solamente abrazaderas, conductos y accesorios aprobados para tales fines.

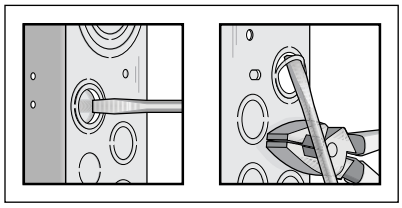

Figure 1. Step 2 / Figura 1. Paso 2

3 Surface mounting

Align and level enclosure by means of removable nails or screws inserted through centered keyholes at top and bottom. Fasten enclosure to wall, using four surface mounting holes (two each at top and bottom) and appropriate user-furnished fasteners. After fastening, remove nails or screws from keyholes.

Note: Keyholes are for alignment only using temporary nails or screws.

Montaje exterior

Ajuste y nivele el receptáculo por medio de los clavos o tornillos extraíbles que se encuentran insertados a través de las bocallaves centradas en la parte superior e inferior. Fije el receptáculo a la pared utilizando los cuatro orificios de montaje exterior (dos en la parte superior y dos en la parte inferior) y los fijadores correspondientes provistos por el usuario. Después de fijar el receptáculo, quite los clavos o tornillos de las bocallaves.

Nota: Las bocallaves pueden ser alineadas únicamente por medio de clavos o tornillos provisionales.

4 Indoor flush mounting

Install enclosure between studs. Locate front edge of enclosure flush with finished wall. (Both sides of enclosure are provided with 3/8-inch (17.1mm) and 1/2-inch (12.7mm) dry wall scribe markings to aid when flush mounting). Oval knockouts are provided on side of enclosure for mounting. Remove knockout and nail or screw through oval opening.

Montaje a ras en interiores

Instale el receptáculo entre los pernos. Coloque el borde frontal del receptáculo al ras de la pared terminada. (Ambos laterales del receptáculo están provistos de marcas para pared seca de 9.5 mm (3/8 pulg.) y 12.7 (1/2 pulg.), que ayudarán al montaje a ras). Los orificios ciegos ovalados de los laterales del receptáculo están destinados al montaje. Retire el orificio ciego e inserte el clavo o tornillo a través de la abertura ovalada.

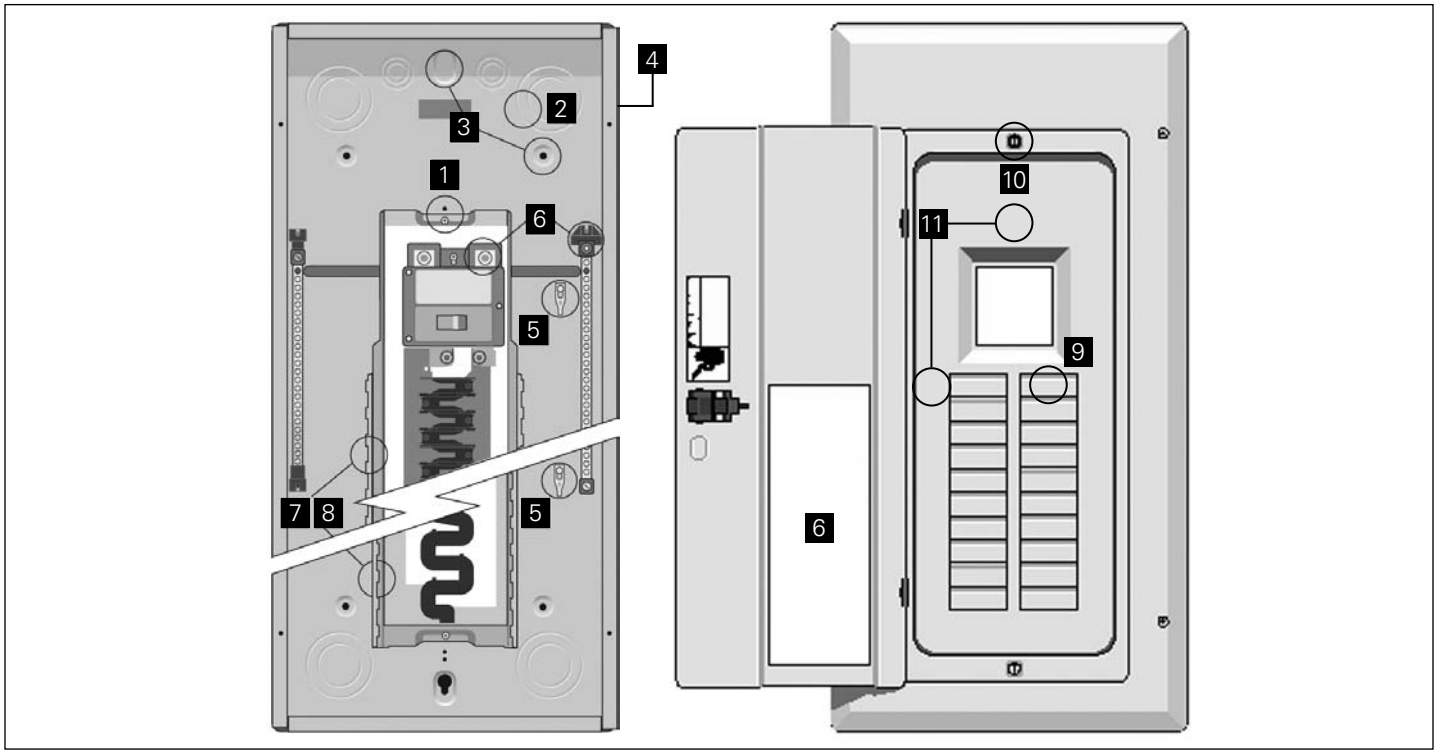

Figure 2. U.S. Design Shown / Figura 2. Ejemplo de diseño estadounidense

5 Grounding and bonding

Refer to the NEC or CEC and applicable local codes for proper grounding methods.

A. For service entrance applications, attach bonding strap to neutral bar. Torque neutral wire screws to 35 lb-in.

B. For second tier panels fed from the service entrance panel, DO NOT attach bonding strap.

Conexión a tierra y enlace a tierra

Consulte los códigos NEC o CEC y los códigos locales correspondientes para obtener los métodos de conexión a tierra pertinentes.

A. Para las aplicaciones de acceso a servicio, conecte la tira de enlace a tierra a la barra neutra. Aplique un par de apriete de 4 Nm (35 lb.-pulg.) a los tornillos del cable neutro.

B. Para centros de carga de segundo nivel alimentados desde el panel de acceso a servicio, NO conecte la tira de enlace a tierra.

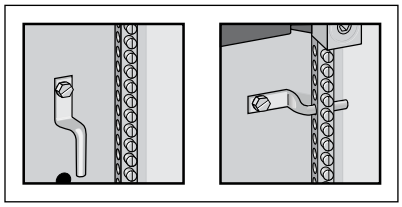

Figure 3. Step 5 / Figura 3. Paso 5

6 Wire mains and neutral

Install main and neutral wires. Torque wire pressure screws to value shown on main label located on inside of door.

Conecte los cables principales y los cables neutros

Instale los cables principales y neutros. Aplique un par de apriete a los tornillos de presión de los cables hasta lograr el valor que se indica en la etiqueta principal en la parte interior de la puerta.

7 Installing branch circuit breakers

Install CH branch circuit breakers by hooking the foot of the breaker on the rail of the backpan and pressing the breaker onto the bus stabs.

Install BR branch circuit breakers by sliding the foot of the breaker under the rail of the backpan and pushing the breaker onto the bus stab.

INSTALL EATON CIRCUIT BREAKERS ONLY.

Important

Do not allow any sprays, chemicals, solvents, or any paint to contact interior components, and inspect for any other debris (such as drywall compounds and dirt). Always check the condition of the bus before installing breakers. Do not install breakers if there is any evidence of damaged plating, signs of oxidation, residual carbon, or other visible damage to the bus. Any of these conditions may cause degradation of electrical insulating materials. If the electrical joint is compromised in any way, the bussing should be replaced.

Instalación de interruptores de circuito de derivación

Instale los interruptores de circuito de derivación CH enganchando las patas del interruptor al riel de la barra de montaje y presionándolo hacia las cuchillas de la barra colectora.

Instale los interruptores de circuito de derivación BR deslizando las patas del interruptor por debajo del riel de la barra de montaje y presionándolo hacia la cuchilla de la barra colectora.

INSTALE SOLO INTERRUPTORES EATON.

Importante

No permita que ningún producto pulverizado, producto químico, solvente ni pintura esté en contacto con los componentes interiores e inspeccione para detectar cualquier otro residuo (como suciedad y compuestos secos). Siempre controle el estado de la barra colectora antes de instalar los interruptores. No instale los interruptores si hay alguna evidencia de revestimientos dañados, signos de oxidación, carbono residual u otro daño visible en la barra colectora. Cualquiera de estas condiciones puede producir la degradación de los materiales de aislamiento eléctrico. Si la conexión eléctrica está comprometida de cualquier manera, se debe reemplazar la barra colectora.

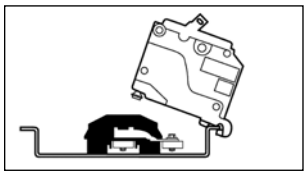

Figure 4. Step 7—Install CH Branch Circuit Breakers / Figura 4. Paso 7 - Instalación de interruptores de circuito de derivación tipo CH

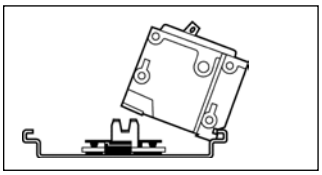

Figure 5. Step 7—Install BR Branch Circuit Breakers / Figura 5. Paso 7 - Instalación de interruptores de circuito de derivación tipo BR

8 Connect branch circuit wires

Connect branch circuit wire to load end of circuit breaker. Tighten wire pressure screw to torque value specified on loadcenter enclosure.

Conecte los cables del circuito de derivación

Conecte el cable del circuito de derivación al extremo de carga del interruptor de circuito. Apriete el tornillo de presión del alambre hasta lograr el valor de par de apriete que se especifica en el receptáculo del centro de carga.

9 Remove twistouts

Remove only those twistouts that match corresponding breaker positions. Remove twistouts by striking with a screwdriver and twisting back and forth with pliers. Any twistouts accidentally removed can be closed with filler plates ordered from your merchant.

Retire las placas de cubierta de interruptores

Retire solamente aquellas placas de cubierta de interruptores que coinciden en las posiciones de los interruptores correspondientes. Retire las mismas golpeándolas con un destornillador y torciéndolas de un lado a otro con una pinza. La posición de cualquier placa que se retire accidentalmente puede cerrarse utilizando placas de relleno solicitadas a su distribuidor.

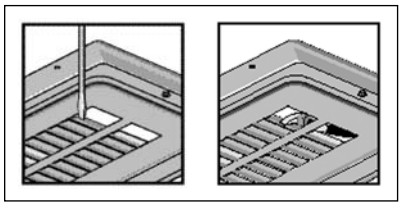

Figure 6. Step 9 / Figura 6. Paso 9

10 Level trim

For flush mounting, inner cover can be adjusted to fit snugly against breakers. To adjust cover inward, turn the two adjusting screws counter clockwise. Adjust each screw alternately until desired fit is achieved.

Ajuste para nivelar

Para el montaje a ras, la cubierta interior puede ajustarse para que entre bien apretada contra los interruptores. Para ajustar la cubierta hacia adentro, gire los dos tornillos de ajuste en sentido contrario a las manecillas del reloj. Ajuste cada tornillo alternadamente hasta que se logre la posición deseada.

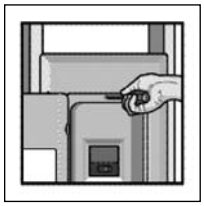

Figure 7. Step 10 / Figura 7. Paso 10

11 Identify loadcenter use and circuits

A. Apply "Service Disconnect" label near main breaker handle if loadcenter is used as main service panel.

B. Apply "Main" label near main breaker handle if loadcenter is used as a subfeed panel.

C. Apply circuit directory labels on inner cover along outside edges of twistouts.

Identifique el uso y los circuitos del centro de carga

A. Coloque la etiqueta "Desconexión de servicio" cerca de la palanca del interruptor principal si el centro de carga será utilizado como el panel de servicio principal.

B. Coloque la etiqueta "Principal" cerca de la palanca del interruptor principal si el centro de carga será utilizado como el panel de subalimentación.

C. Coloque las etiquetas del directorio de circuitos en la cubierta interior, a lo largo de los bordes exteriores de las placas de cubierta de los interruptores.

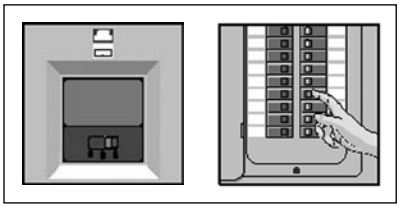

Figure 8. Step 11 / Figura 8. Paso 11

IMPORTANT

BEFORE ENERGIZING LOADCENTER, RE-CHECK ALL ELECTRICAL CONNECTIONS AFTER ALL WIRING HAS BEEN COMPLETED AND BREAKERS HAVE BEEN INSTALLED IN THE LOADCENTER.

IMPORTANT

BEFORE ENERGIZING LOADCENTER, CONFIRM THAT NO PAINT OR OTHER 'OVER-SPRAY' MATERIALS ARE ON BUS OR BREAKER STABS. USE CUT OUT FROM SHIPPING CARTON OR OTHER PAINT SHIELD DURING PAINTING.

Recommended installations instructions for aluminum wire termination

When using connectors marked for Al use, the following is a guide to prevent overheating:

1. Carefully strip insulation, taking care not to nick or ring wires.
2. Thoroughly clean stripped portion with a wire brush. Do not abrade surfaces of connectors.
3. Only coat cleaned wire with corrosion-inhibiting joint compound when noted to do so by manufacturer or affixed publication on product.
4. Insert wire into connector, making certain all strands are included, and securely tighten connector clamping screws. Refer to wiring diagram inside loadcenter door for proper torque.
5. Wipe excess compound from connection area.

   Note: Some compounds are contact aiding with conductive particles, which can reduce the dielectric strength of equipment insulation system.
6. Torque wire pressure screws for all conductors. For proper torque values, refer to the specifications label on circuit breakers and inside of loadcenter door.

IMPORTANTE

UNA VEZ QUE SE HAYA COMPLETADO TODO EL CABLEADO Y QUE SE HAYAN INSTALADO LOS INTERRUPTORES EN EL CENTRO DE CARGA, REVISE NUEVAMENTE TODAS LAS CONEXIONES ELÉCTRICAS ANTES DE ENERGIZARLO.

IMPORTANTE

ANTES DE ENERGIZAR EL CENTRO DE CARGA, CONFIRME QUE NO HAYA PINTURA NI OTROS MATERIALES PULVERIZADOS SOBRE LA BARRA O LAS CONEXIONES DEL INTERRUPTOR. CUANDO PINTE, USE RECORTES DE UNA CAJA DE CARTÓN PARA ENVÍOS U OTRA PROTECCIÓN CONTRA PINTURA.

Instrucciones recomendadas para la instalación de terminaciones de alambres de aluminio

Cuando use conectores marcados para uso A1, guíese según lo siguiente para prevenir el sobrecalentamiento:

1. Quite el aislamiento cuidadosamente para evitar hacer muescas a los alambres ni cortarlos circularmente.
2. Limpie a fondo la porción desnuda con un cepillo de metal. No raspe la superficie de los conectores.
3. Solo cubra los cables limpios con un compuesto para juntas inhibidor de corrosión cuando lo indique el fabricante o se indique en la publicación pegada en el producto.
4. Inserte el cable en el conector asegurándose de que todos los hilos estén incluidos y apriete bien los tornillos de fijación del conector. Consulte el diagrama eléctrico que se encuentra en la parte interior de la puerta del centro de carga para obtener el par de apriete correspondiente.
5. Limpie el exceso de compuesto del área de conexión.

   Nota: Algunos compuestos tienen partículas conductoras y constituyen una ayuda para el contacto, que puede reducir la resistencia dieléctrica del sistema de aislamiento del equipo.
6. Apriete todos los tornillos de presión de todos los conductores. Para obtener los valores de par de apriete correspondientes, consulte la etiqueta de especificaciones que se encuentra en los interruptores y en la parte interior de la puerta del centro de carga.

Indoor main breaker and main lug loadcenters are reversible

Single-phase main breaker and main lug loadcenters may be installed with the main device in either the top or bottom position. No modification is required. Outdoor NEMA® 3R loadcenters are not reversible.

El interruptor principal de interior y los centros de carga con disyuntor principal son reversibles

El interruptor principal monofásico y los centros de carga con disyuntor principal pueden instalarse ubicando el dispositivo principal en la parte superior o inferior. No es necesario modificarlos. Los centros de carga NEMA 3R de exterior no son reversibles.

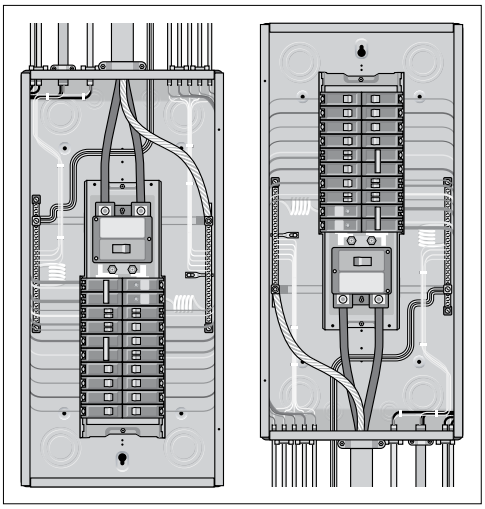

Figure 9. U.S. Design Shown / Figura 9. Ejemplo de diseño estadounidense

Eaton limited warranty for purchases in the U.S. and Canada

I. CH branch circuit breakers

Eaton warrants its type CH branch circuit breaker to be free from failure due to defects in material and workmanship under normal care and proper usage in a residential installation made in accordance with the National Electrical Code for the life of the loadcenter in which it is installed.

II. Type CH loadcenters, Type CH surge panels and Type CH meterbreaker (MB) panels

Eaton warrants its type CH factory-installed main breaker loadcenter, Type CH integrated surge panel, Type CH main lug loadcenter, and Type CH meterbreaker combination panel to be free from failure due to defects in material and workmanship under normal care and proper usage in a residential installation that fully complies with all National Electrical Code requirements for the life of the product.

III. BR branch circuit breakers

Eaton warrants its type BR branch circuit breaker to be free from failure due to defects in material and workmanship under normal care and proper usage in a residential installation that fully complies with all National Electrical Code requirements for a period of 10 years from the date of installation.

IV. Type BR loadcenters and Type BR meterbreaker (MB) panels

Eaton warrants its type BR factory-installed main breaker loadcenter, Type BR main lug loadcenter, and Type BR meterbreaker combination panel to be free from failure due to defects in material and workmanship under normal care and proper usage in a residential installation that fully complies with all National Electrical Code requirements for a period of 10 years from the date of installation.

V. Additional information

In the event the circuit breaker or the loadcenter fails to comply with this warranty, Eaton will, at its option, either repair or replace the product without charge. To obtain warranty service, the purchaser should return the product to the place of purchase or deliver the product prepaid to Eaton at the address set forth below. Proof of purchase in the form of a receipt or invoice, which is evidence that the unit is within the warranty period, must be presented to obtain warranty service.

These warranties do not cover failure or damage due to improper storage, installation, operation, maintenance, accident, misuse, abuse, or negligence. These warranties do not cover reimbursement for labor, transportation, gaining access, removal, installation, temporary power, or any other expenses that may be incurred in connection with repair or replacement of the Eaton products. These warranties cover residential use of the type CH products and type BR products, and exclude any commercial applications.

The remedies as provided under these warranties are the exclusive remedy of the purchaser and the limit of the liability of Eaton with respect to these products, whether in contract, in tort (including negligence or strict liability) or otherwise. Eaton disclaims all other warranties, including without limitation any implied warranty of merchantability or of fitness for a particular purpose, and shall not be liable for any incidental or consequential damages.

With respect to products purchased by consumers of the U.S. for personal use, the implied warranties, including but not limited to the warranties of merchantability and of fitness for a particular purpose, are not excluded but are limited to the duration of the warranty period. Some states do not allow the exclusion or limitation of incidental or consequential damages or implied warranties, so the above limitations or exclusions may not apply to you. This warranty gives you specific legal rights, and you may also have other rights that vary from state to state.

All type CH and type BR product warranties are rendered null and void if a breaker other than those specifically listed by UL® for use in them is installed.

EATON
WARRANTY DEPARTMENT
1725 1200TH AVENUE
LINCOLN, IL 62656

Garantía limitada de Eaton para compras en los EE. UU. y Canadá

I. Interruptores de circuito derivado tipo CH

Eaton garantiza que durante toda la vida útil del centro de carga en que se lo instale, su interruptor de circuito derivado tipo CH está libre de defectos de material y de mano de obra bajo condiciones normales de mantenimiento y de uso adecuado en instalaciones residenciales, de acuerdo con el Código Eléctrico Nacional.

II. Centros de carga tipo CH, paneles de subida de tensión tipo CH y paneles medidor/interruptor tipo CH.

Eaton garantiza que durante toda la vida útil del producto, su centro de carga de interruptor principal tipo CH ensamblado de fábrica, su panel de subida de tensión tipo CH integrado, su centro de carga con disyuntor principal tipo CH y su panel combinado medidor/interruptor tipo CH están libres de defectos de material y de mano de obra bajo condiciones normales de mantenimiento y de uso adecuado en instalaciones residenciales que cumplan con todos los requisitos del Código Eléctrico Nacional.

III. Interruptores de circuito derivado tipo BR

Eaton garantiza, durante un plazo de 10 años a partir de la fecha de instalación, que su interruptor de circuito derivado tipo BR está libre de defectos de material y de mano de obra bajo condiciones normales de mantenimiento y de uso adecuado en instalaciones residenciales que cumplan con todos los requisitos del Código Eléctrico Nacional.

IV. Centros de carga tipo BR y paneles medidor/interruptor tipo BR

Eaton garantiza, durante un plazo de 10 años a partir de la fecha de instalación, que su centro de carga con interruptor principal tipo BR ensamblado de fábrica, su centro de carga con disyuntor principal tipo BR y su panel combinado medidor/interruptor tipo BR están libres de defectos de material y de mano de obra bajo condiciones normales de mantenimiento y de uso adecuado en instalaciones residenciales que cumplan con todos los requisitos del Código Eléctrico Nacional.

V. Información adicional

En el caso de que un interruptor o el centro de carga no cumplan con esta garantía, Eaton reparará o reemplazará el producto sin costo, a su discreción. Para hacer uso de la garantía, el comprador deberá devolver el producto al lugar de compra o enviarlo por correo con franqueo pagado a Eaton, a la dirección que figura abajo. Deberá presentarse también un recibo o factura que sirva para demostrar que el producto fue comprado dentro del período de la garantía.

Estas garantías no cubren fallas ni daños causados por almacenamiento, instalación, operación o mantenimiento indebidos, accidentes, mal uso, abuso o negligencia. Tampoco cubren el reembolso de los gastos generados por mano de obra, transporte, acceso, remoción, instalación, uso de energía temporal ni cualquier otro gasto relacionado con la reparación o el reemplazo de productos Eaton. Las garantías cubren el uso residencial de los productos de tipo CH y BR pero excluyen todo tipo de uso comercial.

Las soluciones que se establecen dentro de las presentes garantías son exclusivas del comprador y representan el límite de la responsabilidad de Eaton respecto de estos productos, ya sea bajo contrato, extracontractualmente (incluida negligencia o responsabilidad civil objetiva) o de cualquier otra manera. Eaton Electrical Inc. desconoce cualquier otra garantía, incluida, a título enunciativo, cualquier garantía implícita de comercialización y adecuación para un uso o propósito específico. La compañía no será responsable de los daños secundarios o indirectos que pudieren resultar.

Con respecto a los productos adquiridos por consumidores de los Estados Unidos para uso personal, las garantías implícitas, incluidas, a título enunciativo, las garantías implícitas de comercialización y adecuación para un uso o propósito específico, no están excluidas pero sí limitadas a la duración de la garantía pertinente. Algunos estados no permiten la exclusión o limitación de los daños secundarios o indirectos o de las garantías implícitas, por lo que las limitaciones o exclusiones antes mencionadas podrían no aplicarse en su caso. Esta garantía le otorga derechos legales específicos, y al mismo tiempo, usted puede gozar de otros derechos que varían según el estado.

Las garantías de productos tipo CH y BR quedarán anuladas si se instala un interruptor distinto de los específicamente autorizados por UL para ser utilizados con dichos productos.

EATON
DEPARTAMENTO DE GARANTÍA
1725 1200TH AVENUE
LINCOLN, IL 62656

⚠ CAUTION

IMMEDIATE TRIPPING WHEN RESETTING THE BREAKER = PRESENCE OF A FAULT.

Arc fault circuit breaker

To obtain the trip code

1. Remove black (hot) load wire from breaker. Remove white (neutral) load wire from breaker. Leave white pigtail wire connected to neutral bar.
2. Reset breaker handle to the ON position.

Trip code displayed for 30 patterns, immediately after the breaker reset.

To access trip code after 30 patterns

1. Turn breaker handle to OFF position. Depress and hold TEST button.
2. Turn the breaker handle to ON position. Release TEST button.

Diagnostic trip codes

Pattern	Description	Resolution
0	**Mechanical Disconnect**—The breaker has detected an overload, short circuit, or was manually turned off	Remove excessive loads from the circuit / identify short circuit
1	**Low Current "Series" Arc**—Low current arcs are typically found in worn or degraded cords, poor electrical connections, or in contacts within equipment	Identify the equipment causing tripping and repair or replace
2	**High Current "Parallel" Arc**—High current arcs are usually found in installed wiring where the wire has been compromised	Locate fault location and replace wire
3	**Short Delay**—Electronic backup to the mechanical short-circuit mechanism	Identify the short circuit and repair
4	**Overvoltage**—The breaker has experienced voltage of 160V RMS or greater	Investigate utility for imbalance or loss of neutral
5	**Ground Fault** ① —Current has found an alternate path to ground, which could cause harm to people or property	Determine location of leakage current and repair
6	**Test Button / Self-Test Failure**—Test button has been pushed or the breaker has failed a self-diagnostics check	Replace the breaker if there is a self-test failure

① 30 mA of ground fault protection available on the CH type combination AFCIs.

⚠ PRECAUCIÓN

DESCONEXIÓN INMEDIATA AL RESTABLECER EL INTERRUPTOR = PRESENCIA DE UNA FALLA.

Interruptor de potencia por falla de arco

Para obtener el código de desconexión

1. Retire el cable negro (de carga activa) del interruptor. Retire el cable blanco (de carga neutra) del interruptor. Deje el cable flexible de conexión blanco conectado a la barra neutra.
2. Restablezca la palanca del interruptor a la posición ON (ENCENDIDO).

El código de desconexión se mostrará para 30 patrones inmediatamente después de que se restablezca el interruptor.

Para acceder al código de desconexión después de 30 patrones

1. Mueva la palanca del interruptor a la posición OFF (APAGADO). Oprima el botón TEST y manténgalo presionado.
2. Mueva la palanca del interruptor a la posición ON (ENCENDIDO). Suelte el botón TEST.

Códigos de diagnóstico de desconexión

Patrón	Descripción	Resolución
0	**Desconexión mecánica**: El interruptor ha detectado una sobrecarga, cortocircuito o se apagó manualmente	Retire las cargas excesivas del circuito o identifique el cortocircuito
1	**Arco de baja corriente "en serie"**: Los arcos de baja corriente se encuentran típicamente en cables desgastados o degradados, conexiones eléctricas deficientes o en contactos incorporados a los equipos	Identifique el equipo que provoca la desconexión y repárelo o reemplácelo
2	**Arco de alta corriente "en paralelo"**: Por lo general, los arcos de alta corriente se encuentran en cableado en donde los cables están deteriorados	Ubique el lugar de la falla y reemplace el cable
3	**Retardo breve**: Respaldo electrónico del mecanismo de cortocircuito mecánico	Identifique el cortocircuito y repárelo
4	**Sobrevoltaje**: El interruptor ha experimentado voltaje de 160 V RMS o superior	Investigue la utilidad en busca de desequilibrio o pérdida de neutro
5	**Falla de aterrizaje** ① : La corriente ha encontrado una ruta alternativa a tierra, la cual podría provocar daños a las personas o a la propiedad	Determine la ubicación de la fuga de corriente y repárela
6	**Falla del botón de prueba o de la prueba automática**: Se ha presionado el botón de prueba o el interruptor no ha pasado una revisión de diagnóstico automático	Reemplace el interruptor si existe una falla en la prueba de prueba automática

① Los interruptores de circuito por falla de arco (AFCI, por sus siglas en inglés) de combinación tipo CH incorporan protección contra fallas de aterrizaje de 30 mA.

Eaton
1000 Eaton Boulevard
Cleveland, OH 44122
United States
Eaton.com

© 2014 Eaton
All Rights Reserved
Printed in USA
Publication No. IL00300001Y-70-8399 / Z14055
February 2014

Eaton is a registered trademark.

All other trademarks are property of their respective owners.

Powering Business Worldwide

XLERATOR® HAND DRYER

MODELS: **XL - BW W GR C SB SI SP** OPTIONS: **-1.1N** (Noise Reduction Nozzle) **-H** (HEPA Filter) **-VOLTAGE** (See Chart)

XL-SB
Brushed Stainless Steel

* Dry time based on third party testing performed by SGS International on standard XLERATOR hand dryer with 0.8 nozzle to 0.2g or less of residual moisture.
** Special Paint powder-coated covers are available in many colors and textures.
*** Exclusive digital image technology allows for the addition of company, school or team logos with any color, design or a 'green message'.

FOR ARCHITECT/ENGINEER APPROVAL

Job Name Date

Model Specified Quantity

Variations Specified

Customer/Wholesaler

Contractor

Architect

PERFORMANCE

A. Dry Time: 10 Seconds*

B. Wattage: 1490 Watts (Heat On) - 425 Watts (Heat Off)

C. Certifications:

CONSTRUCTION

A. All covers will be fastened to a base plate by two chrome plated tamper-proof bolts. Cover shall be one of the following:
Die-cast zinc alloy - One-piece, heavy-duty, rib-reinforced, lightweight, unbreakable, rustproof and all exposed surfaces shall be bright chrome plated or finished with chip-proof, electrostatically applied epoxy paint.
Bulk Molding Compound (BMC) – White reinforced thermoset resin.
Stainless Steel – with a brushed finish.
Special Image – Digital image applied to die-cast or stainless steel covers using patented Kolorfusion Sublimation Decoration process.

B. Base plate shall be equipped with (3) 7/8" (22 mm) diameter holes, the bottom one is suitable for use with surface conduit.

C. All internal parts shall be coated according to Underwriters' Laboratories, Inc. requirements.

D. Entire mechanism shall be internally grounded.

E. Options
HEPA Filtration System: Filters 99.97% of bacteria at 0.3 microns from the air stream.
1.1 Noise Reduction Nozzle: Lowers decibel level 9 dB by reducing air deflection noise but increases dry time by approximately 3 seconds.

F. Accessories (optional)
Microban® Antimicrobial Wall Guards: 89W (White), 89B (Black), 89S (Stainless)
XChanger Paper Towel Retrofit Kit: 40550, 40551 (ADA Height)
ADA Recess Kit: 40502

MECHANISM

A. Motor shall be a thermally protected, series commutated, through-flow discharge vacuum motor/blower (5/8 hp / 20,000 rpm) which provides air velocity of up to 19,000 LFM (linear feet per minute) at the air outlet and 16,000 LFM at the hands (4 inches [102 mm] below air outlet).

B. Heating element (970 w) is constructed of Nichrome wire and mounted inside the blower housing, thereby being vandal resistant. It shall be protected by an automatic resetting thermostat, which shall open whenever air flow is cut off and shall close when flow of air is resumed. It shall produce an air temperature of up to 135°F (57°C) at a 72°F (22°C) ambient room temperature at the hands (4 inches [102 mm] below air outlet).

C. Control assembly is activated by an infrared optical sensor located next to the air outlet. The dryer shall operate as long as hands are under the air outlet. Control includes a speed and sound control mechanism, variable heat control with High, Medium, Low and Off settings and a filter sensor which is activated should the filter become clogged. There is a 35-second lockout feature if hands are not removed. Sensor equipped with externally visible Red LED light that flashes error codes to assist in troubleshooting.

LIMITED WARRANTY

The dryer shall be guaranteed to be free from defects for a period of five (5) years. Warranty shall include labor performed at factory as well as the repair or exchange of defective parts, at manufacturer's option.

QUANTITY RECOMMENDATIONS

One dryer for every two washbasins is sufficient for most applications. If restroom traffic is unusually heavy, we suggest one dryer per washbasin in small installations and two dryers for every three washbasins in larger installations. When a 54" washfountain is used, we suggest four to five dryers.

EXCEL DRYER, Inc.
East Longmeadow, MA
Phone 1.800.255.9235
Fax 1.413.525.2853
sales@exceldryer.com
www.exceldryer.com

XLERATOR® HAND DRYER

MODELS: **XL - BW W GR C SB SI SP** OPTIONS: **-1.1N** (Noise Reduction Nozzle) **-H** (HEPA Filter) **-VOLTAGE** (See Chart)

SIDE VIEW

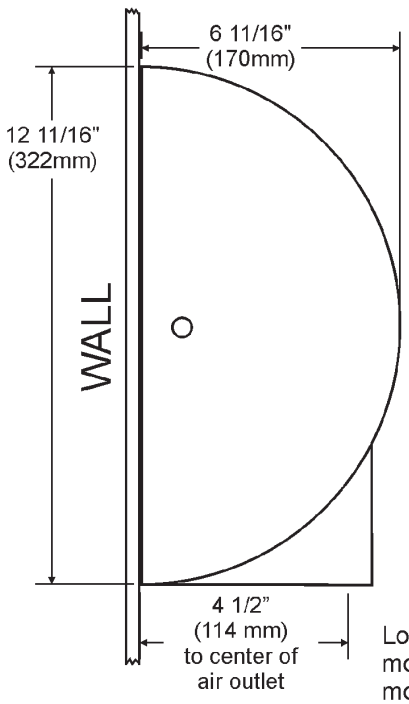

FRONT VIEW FACING WALL

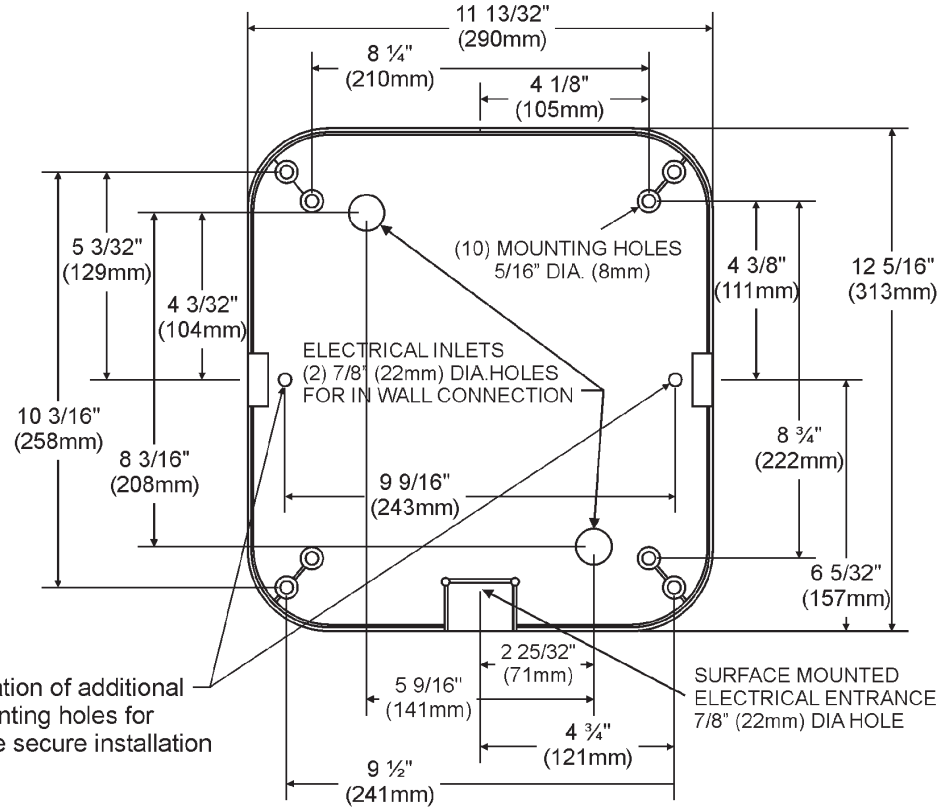

DIMENSIONS

Width 11 3/4" (298 mm) **Height** 12 11/16" (322 mm) **Depth** 6 11/16" (170 mm)

WEIGHT

XL-BW: 15 lbs. (6.8 kgs.) **XL-SB**: 16 lbs. (7.26 kgs.) **XL-W, GR, C, SI, SP**: 17 lbs. (7.71 kgs.)

ELECTRICAL

VOLTS	AMPS	WATTS	NO HEAT AMPS	NO HEAT WATTS	HERTZ	
110-120V	11.3-12.2A	1240-1450W	4.3-4.5A	460-530W	50/60 Hz	c UL us
208-277V	5.6-6.2A	1160-1490W	2.0-2.2A	425-500W	50/60 Hz	c UL us
230V	6.1A	1410W	2.2A	500W	50 Hz	CE

SUGGESTED MOUNTING HEIGHTS

from floor to bottom of dryer:

Men	45" (114 cm)
Women	43" (109 cm)
Teenagers	41" (104 cm)
Small Children	35" (89 cm)
Handicapped	37" (94 cm)

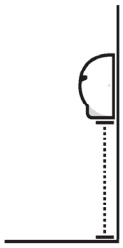

ACTIVATION

Automatic Sensor Operated

MOUNTING

Surface Mounted

OPTIONAL ADA-COMPLIANT RECESS KIT

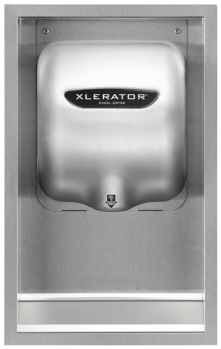

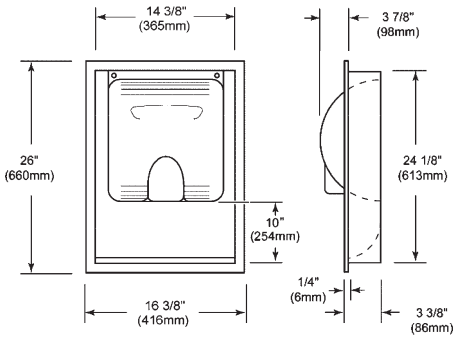

Part # 40502

DIMENSIONS

Width 16 3/8" (416 mm) **Height** 26" (660 mm) **Depth** 3 3/8" (86 mm)

WEIGHT

11 lbs. (4.99 kgs.)

Bottom of recessed wall box should be 10" (254 mm) below suggested mounting height for dryer.

EXCEL DRYER, Inc.
East Longmeadow, MA
Phone 1.800.255.9235
Fax 1.413.525.2853
sales@exceldryer.com
www.exceldryer.com

READ AND SAVE THESE INSTRUCTIONS

XLERATOR® AND XLERATOReco® HAND DRYER MODELS

MODELS: **XL -** **BW** **W** **GR** **C** **SB** **SI** **SP** WITH OR WITHOUT SUFFIX: **ECO** **V** **H**

INSTALLATION AND OWNER'S MANUAL

CONTENTS OF BOX

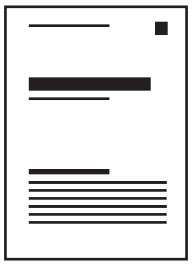

1 Hand Dryer

2 Tamper-Proof Wrench

3 Installation and Owner's Manual

MODEL INFO

Dryer Model _____

Serial Number _____

Date Of Purchase _____

◯ 110–120V	11.3 – 12.2A	
◯ 208–277V	5.6 – 6.2A	
◯ 110–120V	4.3 – 4.5A	XLERATOReco
◯ 208–277V	2 – 2.2A	XLERATOReco

5-YEAR LIMITED WARRANTY (U.S. Only)

1. This product is warranted to be free of manufacturing defects for five (5) years (one [1] year on HEPA Filter & Pre-Filter) from the date of shipment from the Manufacturer's factory at 357 Chestnut St., East Longmeadow, Massachusetts 01028. This warranty explicitly excludes normal wear and tear on the Filter or Pre-Filter, as well as faulty installation, accident, misuse, or vandalism.

   In the event of a breach of the warranty described above, the Owner shall have either one of the following remedies:

   a. The Owner shall return the defective product to the Manufacturer, postage prepaid, and the Manufacturer shall repair said product within a reasonable time and free of charge, provided that said product is returned within the stated period above from the date of original shipment from the Manufacturer's factory in East Longmeadow, Massachusetts; and, provided further that said defect is not due to faulty installation, accident, misuse, or vandalism; or

   b. The Owner may notify the Manufacturer by telephone or in writing of the defect and, within a reasonable time, the Manufacturer shall send a suitable replacement part to remedy said defect, and Owner shall be charged for said part at the current price level. The Owner may return the defective part to the Manufacturer, postage prepaid, along with the serial number of the defective product and the Manufacturer will then issue to the Owner a full credit for the repair part, including outgoing postage (within the Continental U.S. only). Said remedy is available only within the stated period stated above from the date of original shipment of the product from the Manufacturer's factory in East Longmeadow, Massachusetts, and provided further that said defect is not due to faulty installation, accident, misuse, or vandalism.

2. Any implied warranties of merchantability or fitness for a particular purpose are hereby limited to the duration of the express written warranty contained in paragraph one (1); namely, five (5) years (one [1] year on HEPA Filter & Pre-Filter) from the date of shipment from the Manufacturer's factory in East Longmeadow, Massachusetts.

3. There are no other warranties and remedies except as contained herein. This warranty shall inure to the benefit of the Owners, Successors and Assigns.

READ AND SAVE THESE INSTRUCTIONS

IMPORTANT SAFETY INSTRUCTIONS

WARNING: For proper electrical connections, check your local building codes. Your unit must be installed by a qualified, licensed electrician.

PRE INSTALLATION WIRING

- Check that the electrical supply corresponds to that shown on the rating sticker of unit. If the dryer is connected to any electrical supply other than that stated on the rating sticker of the unit, permanent damage or improper, unsafe operation of the unit may result.
- Make sure electricity is switched off at the main panel before installing, maintaining or cleaning this hand dryer. Dryer must be installed in accordance with current local wiring and building regulations.
- Do not wire this hand dryer into the lighting circuit. It must be protected by an independent circuit.
- Dryer is intended to be permanently connected to power supply, and must be properly grounded.

SAFETY

- Troubleshooting and internal maintenance must be performed by qualified service personnel.
- Do not use any power wash equipment for cleaning on or near this unit.
- Do not use the XLERATOR dryer for drying hair.
- Do not obstruct air inlets or outlets.

INSTALLATION INSTRUCTIONS

1. Disconnect the power source previously brought to the hand dryer location (see pre installation wiring above).
2. Use the Tamper-Proof Wrench supplied to remove the 2 cover mounting screws and lift cover to remove from base plate.
3. If electrical wiring entry is to be made from the rear, remove the appropriate pre-formed knockout on the base plate. If entry is to be made from the bottom, knock out the pre-formed area on the cover for your supply connection. A rigid conduit must be used.
4. Select the appropriate mounting height for dryer (Table 1) and fastener, as recommended (Table 2). There should be no obstruction between the hand dryer and the floor. If mounting over a countertop, distance from counter to dryer must be 15” (381 mm) minimum.

CAUTION: *Do not use Base Plate as a guide when drilling. Make sure no pipe work (gas, water, air) or any electrical cables or wires are located directly behind the area to be drilled.*

5. Attach Base Plate at the four corners to smooth wall. For most secure installation, use 2 additional mounting holes as shown in drawing. For non-HEPA units, remove Control Assembly to access the right side mounting hole. For HEPA units, remove filter only to access the right side mounting hole.
6. Identify the voltage of your dryer from the rating sticker of the unit. Then connect to a dedicated branch circuit not exceeding 20 Amp.
7. Secure electrical wiring to terminals as indicated by the schematic affixed to blower housing. An identified ground connection point is supplied on the Base Plate for your equipment ground wire. Dryers should be installed per local code requirements.
8. Carefully replace Cover using the 2 screws previously removed in step 2. Restore power and test for proper operation. In multiple installations, make sure the serial number marked on the inside matches the cover number.
9. It is highly recommended that a bead of silicone sealant be placed around the outside of the cover at the wall to protect dryer from internal corrosion caused by wash water and cleaning solutions.
10. Return Tamper-Proof Wrench and Owner's Manual to owner.

ADJUSTING THE HEAT OUTPUT AND MOTOR SPEED
The dryer is shipped set at maximum heat and motor speed. To adjust, turn the corresponding knob (H=heater, M=Motor) on the control assembly counterclockwise to desired setting.

TABLE 1

1 SUGGESTED MOUNTING HEIGHT
from floor to bottom of dryer:

Men	45" (114 cm)
Women	43" (109 cm)
Teenagers	41" (104 cm)
Small Children	35" (89 cm)
Handicapped	37" (94 cm)

TABLE 2

2 MOUNTING HARDWARE
Recommended Fastener *(not supplied):*

Masonry Wall	½” Expansion Sleeve with ¼” Lag Bolt
Hollow Wall	¼” Wing Type Toggle Bolt
Wooden Wall	¼” Lag Screw With Washer

READ AND SAVE THESE INSTRUCTIONS

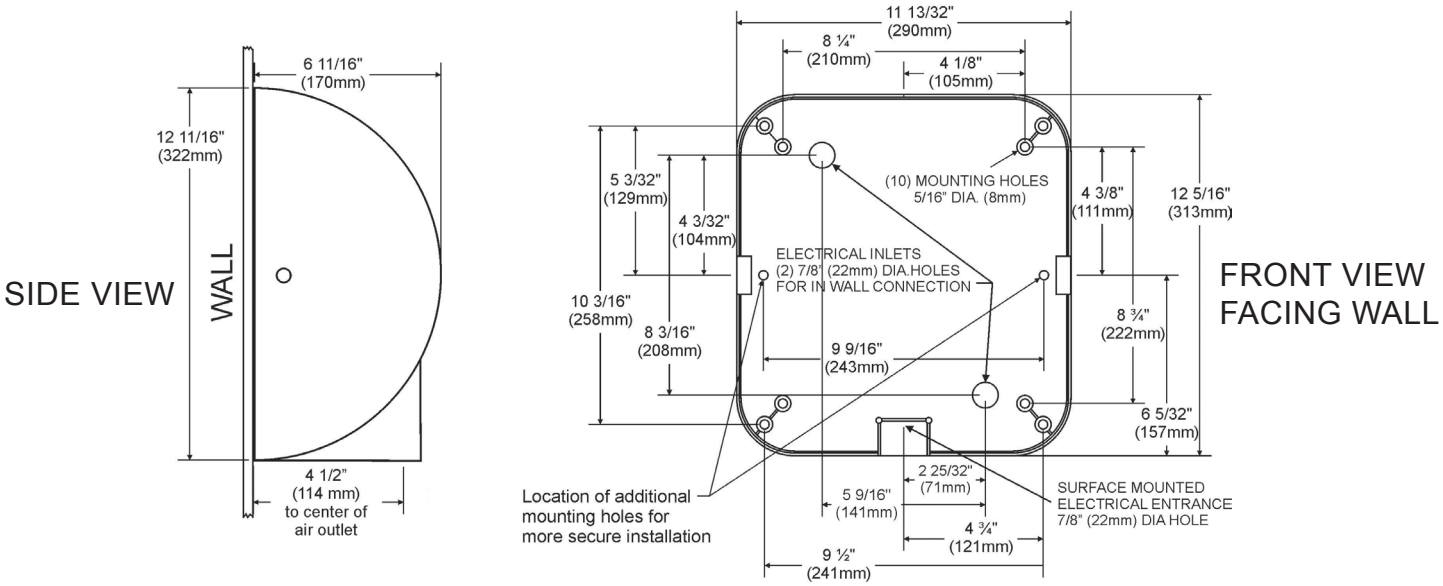

WARNING: TO REDUCE THE RISK OF FIRE, ELECTRIC SHOCK OR INJURY TO PERSONS, OBSERVE THE FOLLOWING:

A. Use this unit only in the manner intended by the manufacturer.

B. Before servicing or cleaning unit, switch power off at service panel and lock the service disconnecting means to prevent power from being switched on accidentally. When the service disconnecting means cannot be locked, securely fasten a prominent warning device, such as a tag, to the service panel.

CLEANING / MAINTENANCE

OUTSIDE Gently wash Cover (including air inlet holes) using a soft cloth or sponge and a mild soap or detergent with lukewarm water to loosen dirt and grime.

INSIDE Excel recommends inspecting the inside of the dryer and cleaning as required at least once per year, or if performance diminishes. Heavier usage, or an environment that contains excessive lint, dust or other particles, requires more frequent cleaning. Lint on the air inlet, the Pre-Filters (Dryer or HEPA if so equipped), or other internal parts of dryer will reduce efficiency and shorten the life of the working parts.

To clean, shut off power to dryer at service connection. Remove Cover by unscrewing the 2 Tamper-Proof Bolts from side of Cover with the special Tamper-Proof Wrench provided with each dryer. Use a small, soft brush to gently clean all parts. If your unit contains a dryer Pre-filter or HEPA Filtration System, unclip the Pre-Filter, rinse the Pre-Filter with water and dry. Re-install. **DO NOT CLEAN THE HEPA FILTER OR ALLOW IT TO COME INTO CONTACT WITH WATER.**

TROUBLESHOOTING

Dryer does not turn on

1. Check power to the unit and connections. Verify dryer is receiving the correct voltage at the Terminal Block (check dryer label).
2. Check RED service LED light next to air outlet on bottom of dryer for

   Light is ON – Place hands under Sensor. If light stays on, then replace Sensor. If light goes off, check to make sure wiring is correct. If OK, check wire connecting to Motor. If both are OK, replace Motor.

   Light is OFF – Check for loose, disconnected or improper wiring (See wiring schematic inside dryer Cover), or replace Control Assembly.

   Light is FLASHING – See error codes in CODE chart

   SENSOR RANGE ADJUSTMENT: *If dryer will not turn on, stays on, or stops working, it may be mounted too close to a counter or object and has gone into lockout. If relocating appliance is not possible, adjust the range of the Sensor. Turn off power to dryer then turn the range adjustment on the Control Assembly counterclockwise towards L (-) low to decrease Sensor range.*

Dryer does not shut off

1. May be mounted too close to a counter or object (adjust Sensor range).
2. Check for loose, disconnected or improper wiring at Control Assembly (refer to wiring schematic affixed to blower housing).
3. Replace Control Assembly.

Dryer does not always turn on, or turns on by itself

1. May be mounted too close to counter or object (adjust Sensor range).
2. Check for foreign material on Optical Sensor next to Air Outlet.
3. Check for loose wires on Control Assembly.
4. Replace Control Assembly.

TROUBLESHOOTING (Continued)

Dryer blows only cold air (non-ECO dryers)

1. Check heat setting on control.
2. Check for loose connections to Heating Element.
3. Replace Heating Element.

Dryer has loss of air volume

1. Check motor speed setting on control.
2. Check for slow running Motor or burning smell. If so, replace Motor.
3. Check Pre-Filter for lint buildup. Clean by removing Pre-Filter and rinse in warm water then dry Pre-Filter before reinstalling.

CODE CHART

Codes are displayed by the flashing of the red LED light in the sensor adjacent to the air outlet.
Normal operation will be indicated by the red LED being on when not drying and off when hands are under the sensor.

DRYER MAINTENANCE CODES

1 SHORT / 1 LONG FLASH	Clogged Pre-Filter	Clean Pre-Filter	Dryer will still run
1 SHORT / 2 LONG FLASH	Severely clogged Pre-Filter	Clean Pre-Filter	Dryer will stop
1 SHORT / 3 LONG FLASH	No pressure detected	Air sensor tube missing or control not mounted correctly	Dryer will still run
2 SHORT / 1 LONG FLASH	In lockout mode	Clear obstruction	Dryer stops until obstruction cleared

MOTOR PROBLEM CODES - First verify that dryer is receiving correct voltage at Terminal Block (check dryer label)

1 LONG / 3 SHORT FLASH	Motor Over Current	Replace Motor	Dryer will stop
1 LONG / 4 SHORT FLASH	Motor Under Current	Replace Motor	Dryer will stop

HEATER PROBLEM CODES - First verify that dryer is receiving correct voltage at Terminal Block (check dryer label)

2 LONG / 3 SHORT FLASH	Shorted or incorrect heater	Replace Heater	Dryer will stop
2 LONG / 4 SHORT FLASH	Open/broken heater	Replace Heater	Dryer will still run

If problem cannot be resolved with the above, please call the manufacturer at 1-800-255-9235 and one of our trained technicians will be happy to assist you.

PARTS LIST

Ref. No.	Description
XL 1	Cover (includes Nameplate)
XL 2	Nameplate
XL 3	Tamper-Proof Bolt
XL 4	Tamper-Proof Wrench
XL 5	Air Outlet (includes gasket)
XL 6	Terminal Block (includes screws)
XL 7	Control Assembly & Sensor
XL 8	Heating Element Assembly*
XL 9	Motor
XL 10	Base Plate Assembly
XL 11	Cover Mounting Brackets
XL 12	Housing Grommet
XL 13	Housing Retainer
XL 15	Optics Assembly (Sensor)
XL 16	Fuseholder (if so equipped)
XL 17	Fuse (if so equipped)
XL 18	HEPA Pre-Filter**
XL 19	HEPA Filter Adapter**
XL 20	HEPA Filter**
XL 21	Pre-Filter

**Does not apply to XLERATOReco models*
***Only applies to HEPA models*

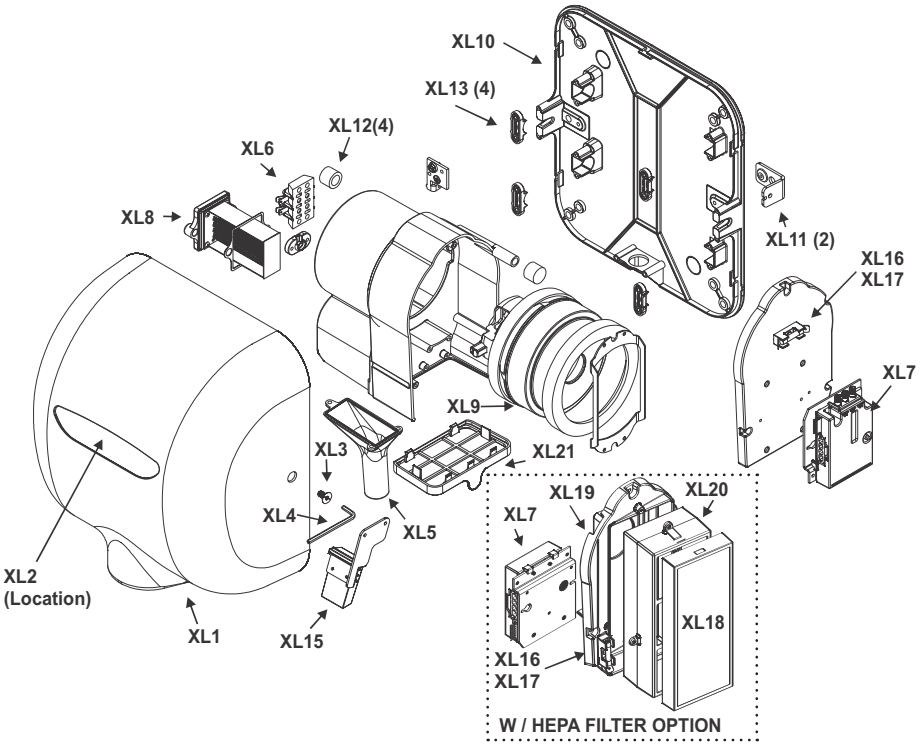

Data sheets to follow.

1½" O.D. heavy duty stainless steel grab bar with concealed mounting:

Product Materials

FLANGES: 3⅛" dia. 13 gauge stainless steel.

ESCUTCHEONS: 22 gauge stainless steel. One-piece drawn construction with exposed surfaces in architectural satin finish. Snap over flanges to conceal mounting screws.

TUBING: 1½" O.D. 18 gauge stainless steel, seamless construction with exposed surfaces in architectural satin finish. Bent ends of tubing pass thru the flanges and are welded for maximum strength. Intermediate supports are contour cut and joined by welding to form an integral part of the grab bar. All exposed welds ground and polished to blend. Mandrel bending process maintains uniform bar diameter. Return provides 1½" standard safety clearance between wall and bar.

Strength

When properly mounted, all Bradley heavy duty grab bar systems meet or exceed the requirements of ANSI Standard A117.1, the ADA and ABA Accessibility Guidelines for Buildings and Facilities (ADAAG), and the Uniform Federal Accessibility Standard (UFAS). Select dimensions of configurations are 3rd party tested to support up to 1000 pounds. See configurations on the following page. All other 812 grab bars outside of these parameters are rated to support up to 250 pounds. Wall must be reinforced in the area of the grab bar in order to support the load it is intended to support.

Guide Specification

Grab bar shall be fabricated of stain finish stainless steel with concealed mounting flanges in sizes and configurations as indicated. Install with Bradley Mounting Kits as indicated.

Installation

For instructions on installation, warnings and maintenance, please visit www.bradleycorp.com.

ADA Compliant

- ☑ Consult local and national accessibility codes for proper installation guidelines.
- ☑ Conformity and compliance to local and national codes is the responsibility of the installer.

Optional Features

Features		Suffix
☐	Safety-grip finish	-2
☐	High-polish finish	-4
☐	Safety grip with high-polished finish: 001-18, 001-24, 001-36, 001-36-10, 001-42, 001-42-10 only	-7
☐	Antimicrobial finish: 1-1/2" - 001-18, 001-24, 001-36 & 001-42 only	-AM

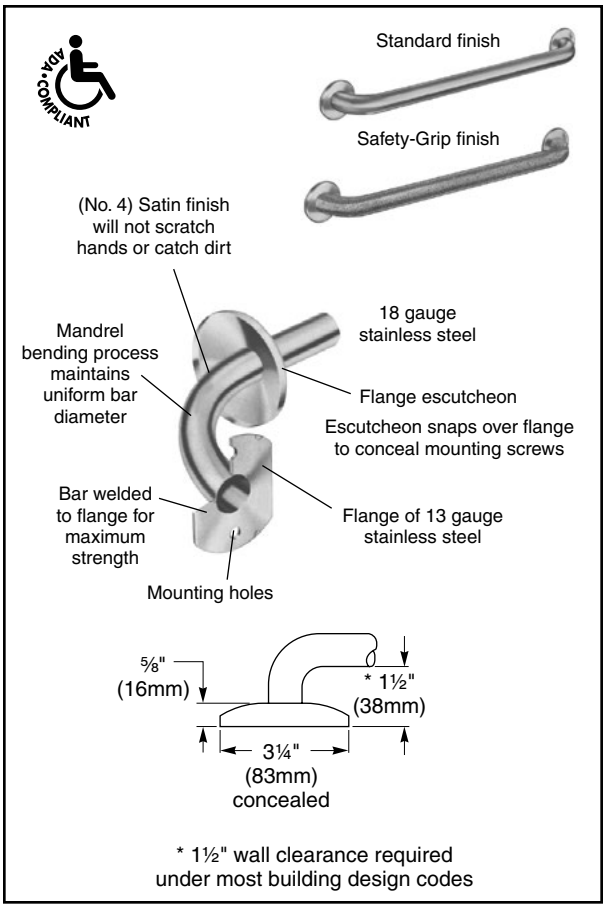

Bradex® Models

Configuration Number	Shipping Data		Configuration Number	Shipping Data	
	Cu. Ft.	Wt. Lbs.		Cu. Ft.	Wt. Lbs.
001-18"	0.14	2	001-42"	0.15	4
001-24"	0.14	3	001-42"-10	3.14	37.67
001-30"	0.15	3	001-48"	0.25	4
001-36"	0.15	3	059**	2.85	7
001-36-10	2.40	30.46			

NOTE: These units must ship via common carrier.
** 059: 40" x 52" Standard Dimensions.

Orders composed of products indicated as ***Bradex***® will be available to ship in three days after receipt of order at the factory. There is no pricing penalty for this service from Bradley.

This information is subject to change without notice.

© 2019 Bradley
P.O. Box 309, Menomonee Falls, WI 53052-0309
800 BRADLEY (800 272 3539) +1 262 251 6000
bradleycorp.com

Configuration Information - Bariatric Models

	OD	1-1/2"
	Rating (LBS)	1000
Configuration Number	**Grab Bar Length**	**812 Series**
001-12	12"	X
001-18	18"	X
001-24	24"	X
001-36	36"	X
001-48	48"	X
001-54	54"	X
059/058	up to 42" x 54"	X
057	30" x 30"	X
054	33" x 30"	X
055	24" x 24"	X
060	36" x 60" x 36"	X

WARNING **Only models/configurations listed on this page have been rated for use up to 1000 pounds. Please see Grab Bar Configurations on bradleycorp.com for all other available configurations.**

Bradex® Item - Standard Finish

Bradex® Item - Standard Finish or Safety Grip Finish (-2)

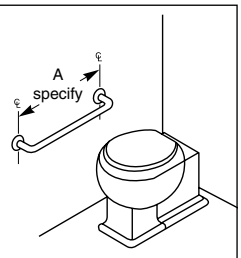

☐ **001**
Model 812 - 54" Max
Model 832 - 48" Max
Model 852 - 24" Max

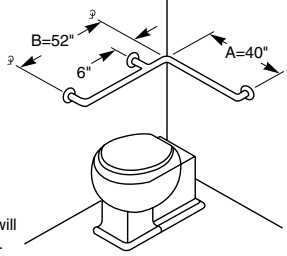

☐ **058**
(LH) "B" side will have stand-off.
(Note: Series 817 and 837 versions of this configuration are reversible and should be ordered as 059 configuration.

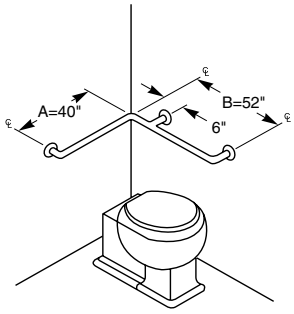

☐ **059**
Opposite **058** (RH) "B" side will have stand-off.

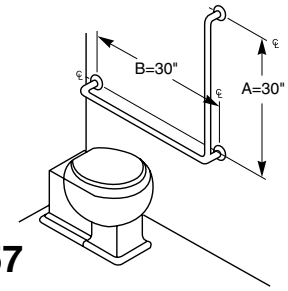

☐ **057**
30" x 30"

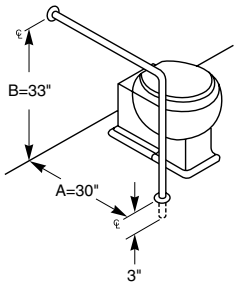

☐ **054**
30" x 33"

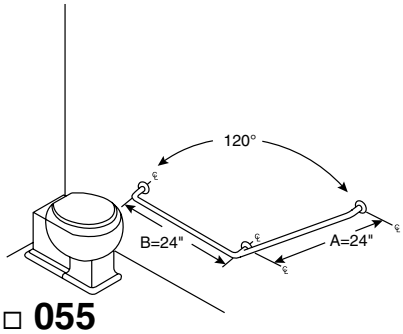

☐ **055**
24" x 24"

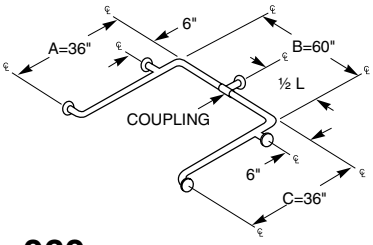

☐ **060**
This configuration ships in two pieces which are joined at the coupling. This configuration can ship via UPS.

Orders composed of products indicated as ***Bradex®*** will be available to ship in three days after receipt of order at the factory. There is no pricing penalty for this service from Bradley.

This information is subject to change without notice.
Bradley_GrabBar_812

© 2019 Bradley
P.O. Box 309, Menomonee Falls, WI 53052-0309
800 BRADLEY (800 272 3539) +1 262 251 6000
bradleycorp.com

Installation

-001 configuration shown. See Bradley's website for other configurations.

Grab Bars - Concealed Mounting

812, 832 & 852 Series

WARNING

All mounting hardware is supplied by installer and must be appropriate for wall construction. Wall anchors/ backing used must provide adequate support for the intended load requirements.

Grab bars are no stronger than the anchors and walls to which they are attached, and therefore, must be firmly secured in order to support the intended load requirements. To avoid potential injury, the building owner or maintenance personnel should remove the grab bar from service if the mounting is not adequately secured to the wall or if there are any observed product defects.

CAUTION

Personal Protective Equipment (PPE) is required during the installation of this product.

IMPORTANT

Read this entire installation manual to ensure proper installation. When finished with the installation, file this manual with the owner or maintenance department. Compliance and conformity to local codes and ordinances is the responsibility of the installer.

Separate parts from packaging and make sure all parts are accounted for before discarding any packaging material. If any parts are missing, do not begin installation until you obtain the missing parts.

Product warranties may be found under "Products" on our website at www.bradleycorp.com.

500-376 Rev. A; ECN 18-15-009
© 2018 Bradley

P.O. Box 309
Menomonee Falls, WI 53052 USA
800 BRADLEY (800 272 3539)
+1 262 251 6000
bradleycorp.com

Installation

Verify all rough-in dimensions prior to installation.

WARNING Wall must be reinforced in the area of the grab bar in order to support the load it is intended to support.

1. Using the bar as a template, mark the mounting hole location onto the wall. For middle mounting flanges, locate the mounting holes on the smaller side of the keyhole cutout.
2. Drill holes and set anchors as appropriate.
3. Mount grab bar and secure mounting screws (supplied by installer).
4. Snap escutcheons into place.

For more information on Bradley's grab bar mounting kits, please visit www.bradleycorp.com

Mounting Flange Dimensions

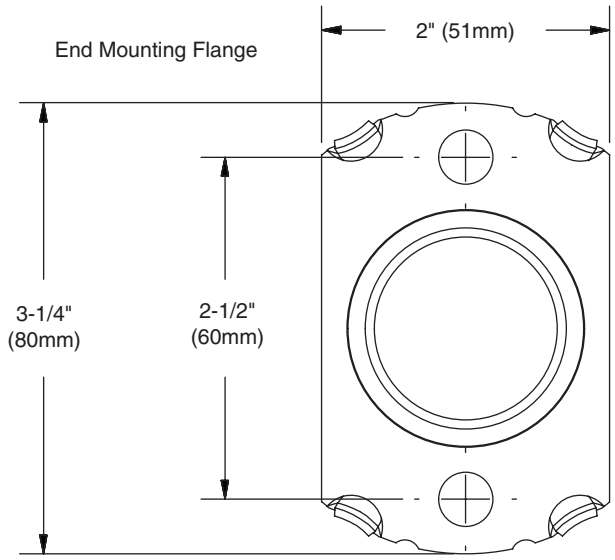

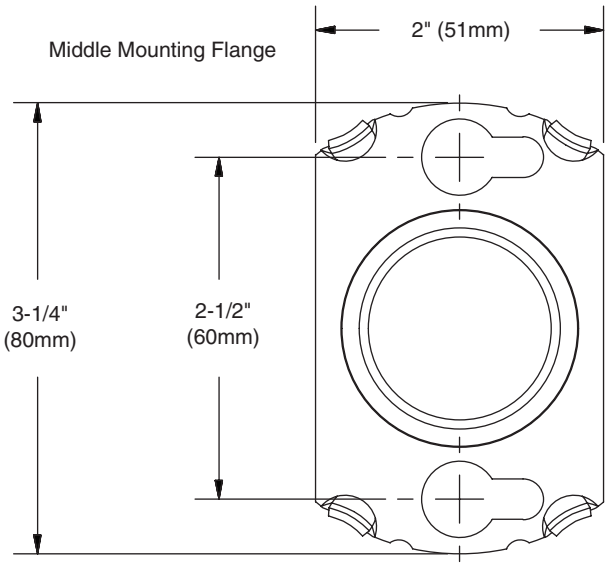

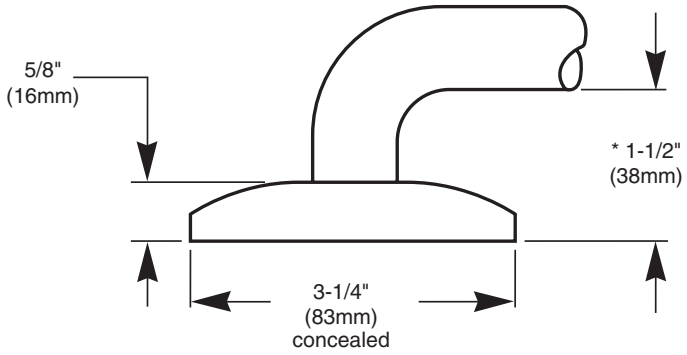

* 1-1/2" wall clearance required under most building design codes

Mirror with roll-formed channel frame and theft-resistant mounting:

- ☐ **Standard Model 781-1824 (18" x 24") *Bradex*®**
- ☐ **Standard Model 781-1830 (18" x 30") *Bradex*®**
- ☐ **Standard Model 781-1836 (18" x 36") *Bradex*®**
- ☐ **Standard Model 781-18362 (18" x 36", tempered glass) *Bradex*®**
- ☐ **Standard Model 781-2430 (24" x 30") *Bradex*®**
- ☐ **Standard Model 781-2436 (24" x 36") *Bradex*®**
- ☐ **Standard Model 781-24362 (24" x 36", tempered glass) *Bradex*®**
- ☐ **Standard Model 781-2448 (24" x 48") *Bradex*®**
- ☐ **Standard Model 781-2460 (24" x 60") *Bradex*®**
- ☐ **Model 781-XXXX (Specify width and height)**

Product Materials

FRAME: one-piece, roll-formed stainless steel with bright annealed finish. Channel is ¾" x ¾" x 7/16" with 90° mitered corners. Double strength continuous integral stiffener on all sides for added strength.

BACK: galvanized steel.

MIRROR: first quality ¼" float glass, thermosetting infrared cured paint backing with Poly-Glaze protective finish. Manufactured in accordance with ASTM C 1036 and ASTM C 1503. All edges protected by shock-absorbing, neoprene tubing. The back of the mirror is protected by a sheet of ¼" extruded polystyrene, which is placed between the mirror and the galvanized steel.

MOUNTING BRACKETS: 18 gauge cold rolled steel.

Optional Features

Features		Suffix
☐	¼" tempered glass mirror in lieu of polished float glass mirror*	-2
☐	Laminate glass	-3
☐	Highly polished No. 8 architectural finish, 20 gauge stainless steel in lieu of polished float glass mirror	-4
☐	Bright annealed 20 gauge stainless steel in lieu of polished float glass mirror	-5
☐	Plexiglas®	-6

*Either the Length (L) or the Width (W) must be greater than 25".

- ☑ An inherent characteristic of a manufacturing process for tempered glass is distortion which may vary from mirror to mirror.
- ☑ Stainless steel mirrors will differ in optic quality from glass mirrors.
- ☑ In larger sizes, stainless mirrors are subject to distortion and/or "oil canning" for which Bradley Corporation cannot accept responsibility.
- ☑ Bradley mirrors are not field interchangeable from horizontal to vertical or vice versa. **Always specify width first.**

Installation

Verify all rough-in dimensions prior to installation. Secure concealed mounting bracket to wall with screws (not included) at holes provided. Mounting kits available through Bradley (ref. #899-026). For more information, visit bradleycorp.com. Provide in-wall backing at mounting screw locations. Position mirror over mounting bracket to engage hanger tabs. Slide mirror down and lock into position.

Guide Specification

Mirror shall be framed with one-piece, roll-formed stainless steel with ¾" face and neatly mitered corners. Double -strength continuous integral stiffener on all sides. Back of unit shall be galvanized steel. Separate brackets for concealed mounting. Mirror shall be of first quality ¼" polished float glass, guaranteed for 15 years against silver spoilage and protected by shock-absorbing, neoprene tubing with Poly-Glaze protective finish.

Framed Mirror shall be Bradley Model 781-_____" W x_____" H (specify width and height).

ADA Compliant

- ☑ Consult local and national accessibility codes for proper installation guidelines.
- ☑ Conformity and compliance to local and national codes is the responsibility of the installer.

Orders composed of products indicated as ***Bradex***® will be available to ship in three days after receipt of order at the factory. There is no pricing penalty for this service from Bradley.

This information is subject to change without notice.

© 2017 Bradley
P.O. Box 309, Menomonee Falls, WI 53052-0309
800 BRADLEY (800 272 3539) +1 262 251 6000
bradleycorp.com

Dimensions

MIRRORS 30" WIDE AND UNDER

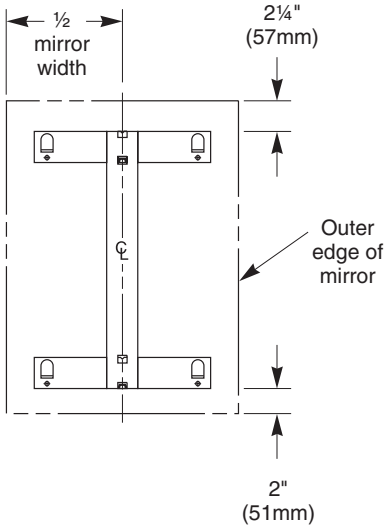

MIRRORS OVER 30" WIDE

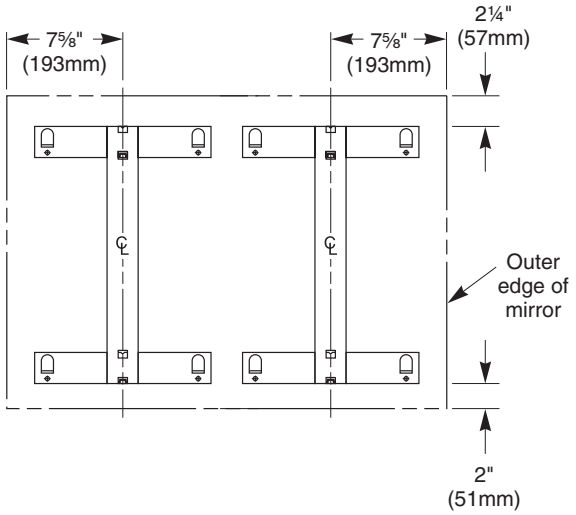

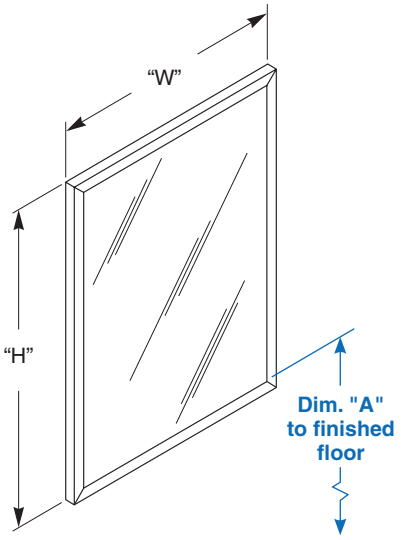

Dim. "A" Key Surface:	For Dim. "A"	Bottom of Unit
Mirror's bottom edge of the reflecting surface to finished floor	40" (1016mm)	39¼" (997mm)
	37" (940mm)	36¼" (921mm)
	34" (864mm)	33¼" (845mm)
Rough wall opening:		
Surface Mount:	No rough wall opening, see overall dimensions	

Bradex® Models

Width (Inches) W	Height (Inches) H	Overall Dimension (Inches)	Overall Dimensions (Millimeters)	Standard Model Number
18"	24"	18 x 24	457 x 610	781-1824
18"	30"	18 x 30	457 x 762	781-1830
18"	36"	18 x 36	457 x 914	781-1836
18"	36"	18 x 36	457 x 914	781-18362
24"	30"	24 x 30	610 x 762	781-2430
24"	36"	24 x 36	610 x 914	781-2436
24"	36"	24 x 36	610 x 914	781-24362
24"	60"	24 x 60	610 x 1524	781-2460
24"	48"	24 x 48	610 x 1219	781-2448
36"	36"	36 x 36	914 x 914	781-3636
Model 781 series channel-framed mirrors can be fabricated to fit a maximum size of 120"W x 72"H but must not exceed 40 sq ft.				

Orders composed of products indicated as ***Bradex***® will be available to ship in three days after receipt of order at the factory. There is no pricing penalty for this service from Bradley.

This information is subject to change without notice.

© 2017 Bradley
P.O. Box 309, Menomonee Falls, WI 53052-0309
800 BRADLEY (800 272 3539) +1 262 251 6000
bradleycorp.com

⚠ IMPORTANT ⚠

Adequate in-wall backing must be provided by installer to fully support the weight of the unit. Always check local codes and ordinances prior to installation.

Use extreme care when removing the wall bracket from the back of the mirror. Do not allow the tabs or slots to become flat or bent out of shape.

For ease of installation, make sure to allow 1-1/2" of clear space above the mirror on the wall.

Make sure the slots on the back of the mirror slide over ALL the wall bracket tabs. When the mirror is secured to the wall, a concealed locking tab will snap into locking position (you will hear the locking tab snap into place).

After installation is complete, try to remove the mirror from the wall. If the mirror lifts off the wall, check for damaged tabs or slots. A special tool available from Bradley (330-074) is required to press down the locking tab to remove the mirror from the wall.

⚠ IMPORTANT ⚠

Un support adéquat dans le mur doit être fourni par l'installateur pour soutenir entièrement le poids de l'unité. Toujours vérifier les codes locaux et arrêtés municipaux avant toute installation.

Faire preuve d'extrême prudence lors du retrait du support mural du dos du miroir. Ne pas laisser les pattes ou les fentes s'aplatir ou se déformer.

Pour faciliter l'installation, s'assurer de prévoir une hauteur libre de 3,8 cm (1-1/2") au-dessus du miroir sur le mur.

S'assurer que les fentes sur le dos du miroir glissent sur TOUTES les pattes du support mural. Une fois le miroir attaché au mur, une patte de verrouillage dissimulée s'enclenchera en position de verrouillage (la patte de verrouillage émet un son lorsqu'elle s'enclenche en place).

Une fois l'installation terminée, essayer de retirer le miroir du mur. Si le miroir se soulève du mur, vérifier si les pattes ou les fentes sont endommagées. Un outil spécial, disponible auprès de Bradley (330-074), est nécessaire pour appuyer sur la patte de verrouillage afin de retirer le miroir du mur.

⚠ IMPORTANTE ⚠

El instalador debe proporcionar soportes adecuados en la pared para sostener todo el peso de la unidad. Siempre compruebe los códigos y las ordenanzas locales antes de la instalación.

Tenga máximo cuidado al retirar el soporte de pared de la parte posterior del espejo. No permita que las lengüetas o ranuras se aplanen o doblen quedando deformes.

Para facilitar la instalación, asegúrese de dejar 3,8 cm (1-1/2") de espacio libre sobre el espejo en la pared.

Asegúrese de que las ranuras que se encuentran en la parte posterior del espejo se deslicen sobre TODAS las lengüetas del soporte de pared. Cuando el espejo se fija a la pared, una lengüeta de seguridad oculta encajará en posición bloqueada (escuchará un clic cuando la lengüeta encaje en su lugar).

Una vez que termine la instalación, intente retirar el espejo de la pared. Si se levanta el espejo de la pared, revise si hay lengüetas o ranuras dañadas. Se requiere una herramienta Bradley especial (330-074) para presionar la lengüeta de seguridad para retirar el espejo de la pared.

⚠ WICHTIG ⚠

Der Installateur muss gewährleisten dass ein ausreichender Traeger unter dem Putz vorhanden ist welcher das Gewicht des Spiegels tragen kann. Vor der Installation ueberpruefen dass die Installation den örtlichen Bau- und Montagerichtlinien entsprechen.

Beim Entfernen der Wandhalterung von der Rückseite des Spiegels äußerst vorsichtig vorgehen. Die Zungen oder Schlitze nicht flachdrücken bzw. verformen.

Mindestens 3,8 cm (1,5 Zoll) Freiraum über dem Spiegel lassen, um die Installation zu erleichtern.

Versichern dass die Schlitze an der Rückseite des Spiegels über ALLEN Zungen der Wandhalterung positioniert sind. Wenn der Spiegel an der Wand befestigt wird, rastet eine verdeckte Verriegelungszunge (hörbar) in der Verriegelungsposition ein.

Nach der Installation versuchen, den Spiegel vorsichtig von der Wand wegzuziehen. Wenn der Spiegel von der Wand gezogen werden kann muss die Rückseite auf beschädigte Zungen oder Schlitze überprüft werden. Zum Eindrücken der Verriegelungszunge und Entfernen des Spiegels von der Wand ist ein Spezialwerkzeug (330-074) von Bradley erforderlich.

1

Mirrors 30" wide or less
Miroirs de 76,2 cm (30") de large maximum
Espejos de 76,2 cm (30") de ancho o menos
Spiegel mit max. 76,2 cm (30 Zoll) Breite

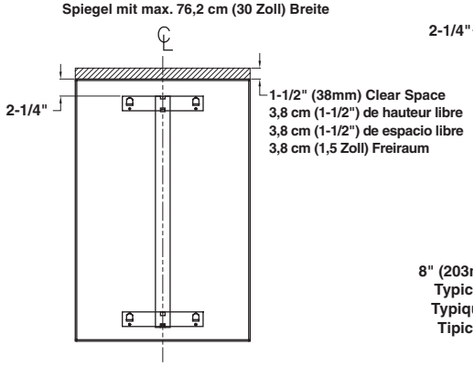

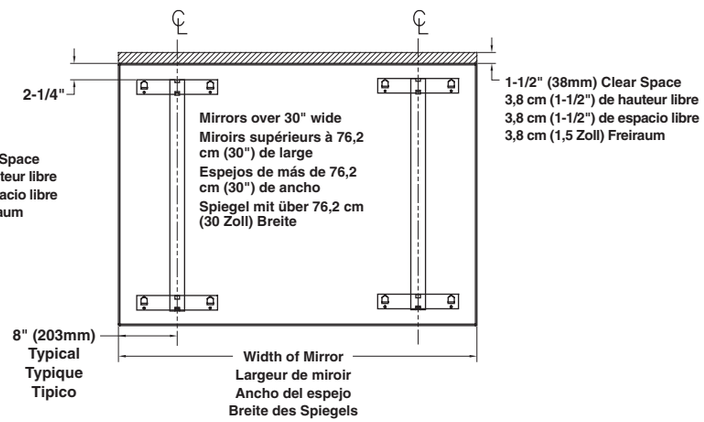

2

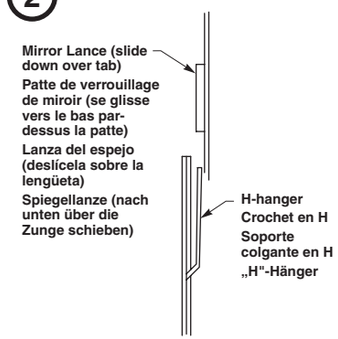

3

Mirrors up to 48" wide (no bracket)
Mirrors 48"–59" wide (one bracket)
Mirrors 60"–95" wide (two brackets)
Mirrors 96"–120" wide (three brackets)

Miroirs de 122 cm (48") de large maximum (sans support)
Miroirs de 122 à 150 cm (48" à 59") de large (un support)
Miroirs de 151 à 214 cm (60" à 95") de large (deux supports)
Miroirs de 242 à 305 cm (96" à 120") de large (trois supports)

Espejos de hasta 122 cm (48") de ancho (sin soporte)
Espejos de 122 a 150 cm (48" a 59") de ancho (un soporte)
Espejos de 151 a 241 cm (60" a 95") de ancho (dos soportes)
Espejos de 242 a 305 cm (96" a 120") de ancho (tres soportes)

Spiegel mit max. 122 cm (48 Zoll) (ohne Halterung)
Spiegel mit 122-150 cm (48-59 Zoll) Breite (eine Halterung)
Spiegel mit 151-241 cm (60-95 Zoll) Breite (zwei Halterungen)
Spiegel mit 242-305 cm (96-120 Zoll) Breite (drei Halterungen)

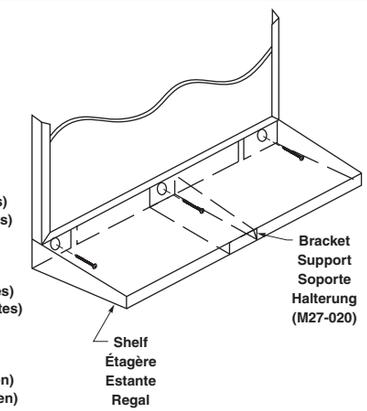

P20-050 Rev. D; EN 06-1509
© 2007 Bradley Corporation
1/16/07

Bradley
P.O. Box 309, Menomonee Falls, WI 53052-0309
Phone: 1-800-BRADLEY Fax: (262) 251-5817
www.bradleycorp.com

ROMTEC STAINLESS STEEL TOILET PAPER DISPENSER

The following is an example of the Romtec toilet paper dispenser included in the design of this building.

Specifications

- Stainless Steel
  - ¼” thick stainless steel
  - 11” long
- Holds two rolls
- Narrow bar provides easy rotation
- Padlock supplied by others

PARTS LIST			
ITEM	QTY	PART NUMBER	DESCRIPTION
1	2	MI-0004-5006-PL-0.125-FM-toilet paper bracket stainless steel	TOILET PAPER BRACKET, SS
2	1	MI-0011-5007-PL-0.25-FM-toilet paper bar 2 roll stainless steel.ipt	TOILET PAPER BAR, 2 ROLL, NARROW, STAINLESS STEEL

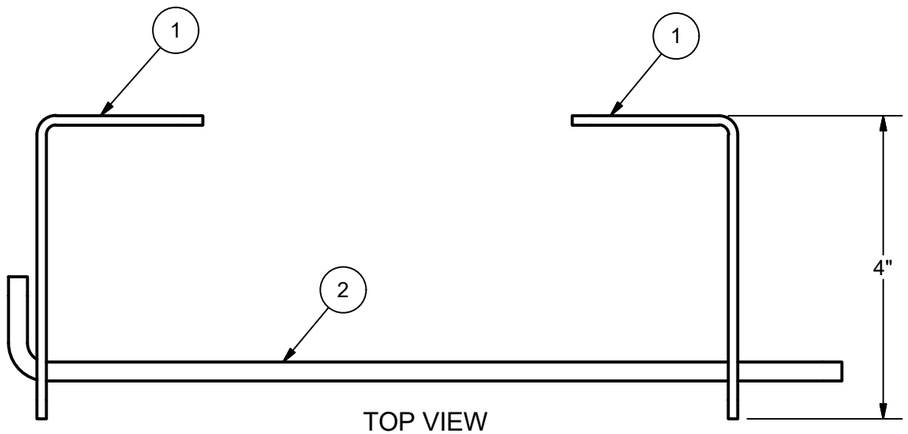

TOP VIEW
SCALE 1 / 2

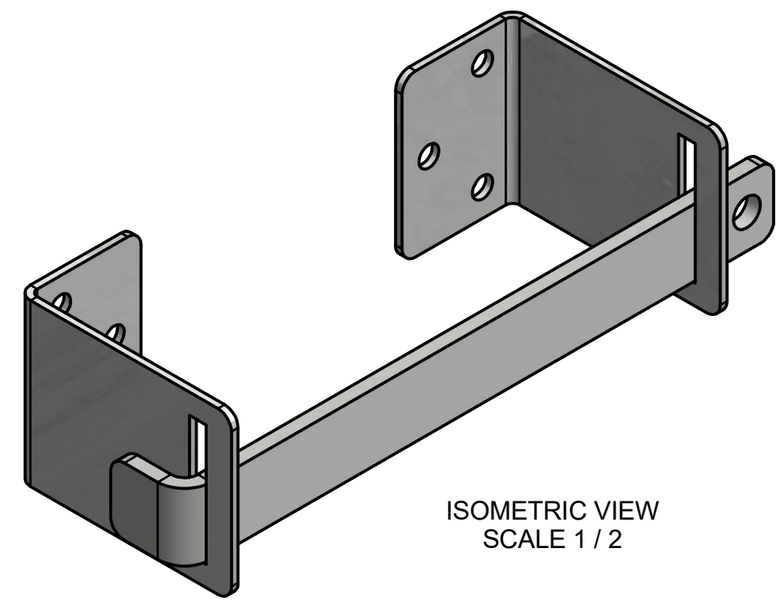

ISOMETRIC VIEW
SCALE 1 / 2

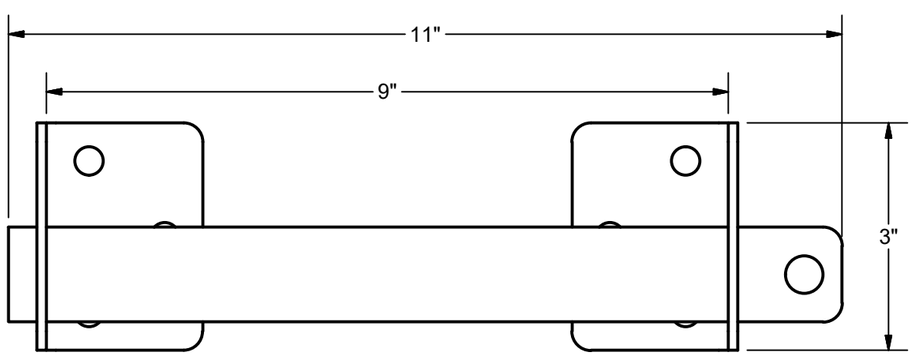

FRONT VIEW
SCALE 1 / 2

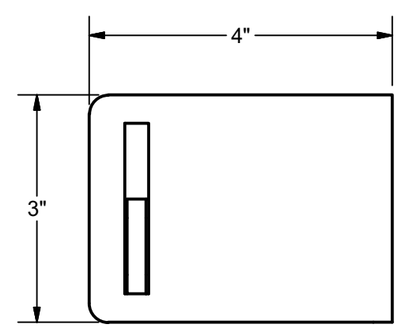

TOP VIEW
SCALE 1 / 2

INSTALLATION HARDWARE:
CMU WALL - (6) - 5/16" x 1 3/4" ULTRACON SCREWS
WOOD FRAMED WALL - (6) - 5/16" x 1 3/4" ULTRACON SCREWS
PARTITIONS - (6) - 1/4" X 1/2"L HEX BOLT W/ WASHER AND NUT

ROMTEC
18240 NORTH BANK ROAD
ROSEBURG, OR 97470
(541)-496-3541
FAX (541)-496-0803

MANUFACTURING

© 2017 ROMTEC, INC. ALL RIGHTS RESERVED. THESE PLANS AND DRAWINGS MAY NOT BE REPRODUCED, ADAPTED OR FURTHER DISTRIBUTED, AND NO BUIILDINGS MAY BE CONSTRUCTED FROM THESE PLANS, WITHOUT WRITTEN PERMISSION OF ROMTEC, INC.

DATE: 8/4/2017
DRAWN BY: LS

()=REFERENCE DIMENSION
TOLERANCES (UNLESS OTHERWISE SPECIFIED)

FRACTIONS	±1/16
.XX	±.010
.XXX	±.005
ANGLES	±1/2°

DISPENSER
TP, SS 2-ROLL, THIN

REV	DESCRIPTION	DATE	BY
4	SEE MASTER PRODUCTION REVISION LIST	2/17/20	AM

BOM PART: 8403
SHEET 1 OF 3
DWG. NO. MI-011-5003

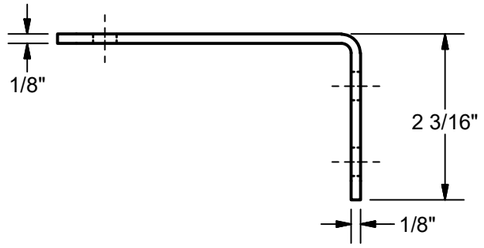

TOP VIEW
SCALE 1/2

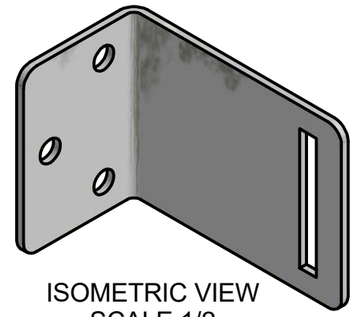

ISOMETRIC VIEW
SCALE 1/2

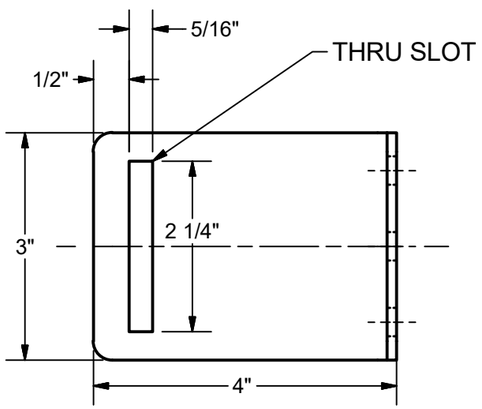

FRONT VIEW
SCALE 1/2

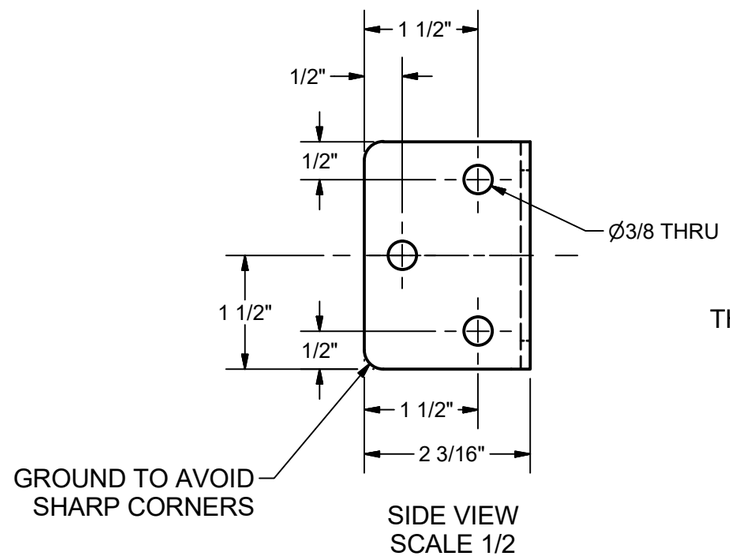

SIDE VIEW
SCALE 1/2

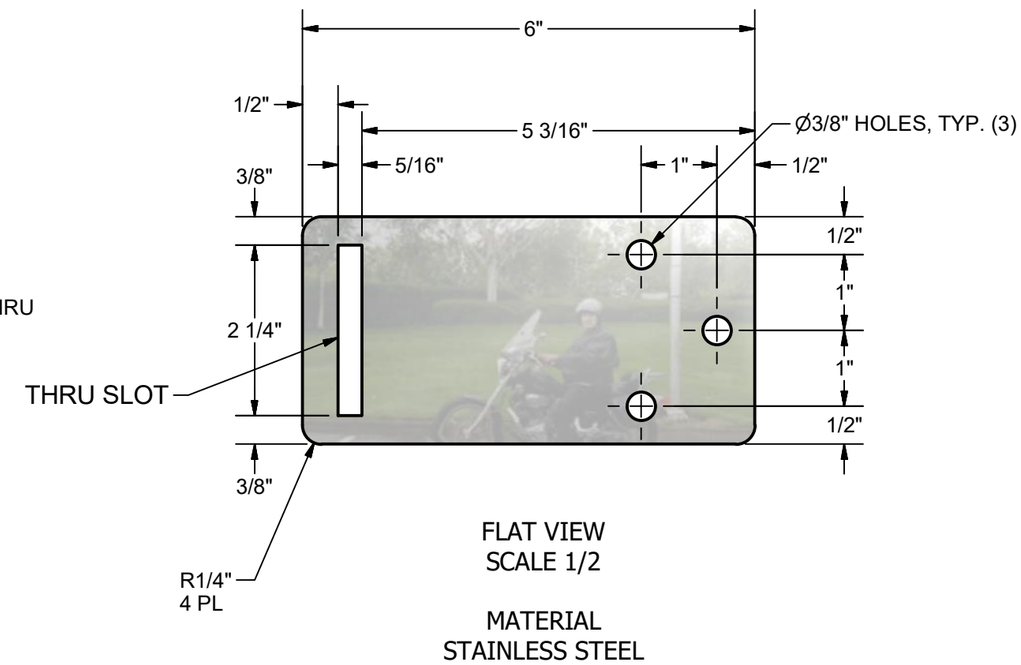

FLAT VIEW
SCALE 1/2

MATERIAL
STAINLESS STEEL

PLATE THICKNESS = 1/8"

1 TOILET PAPER BRACKET

SCALE: 1/2

ROMTEC
18240 NORTH BANK ROAD
ROSEBURG, OR 97470
(541)-496-3541
FAX (541)-496-0803

MANUFACTURING

© 2017 ROMTEC, INC. ALL RIGHTS RESERVED. THESE PLANS AND DRAWINGS MAY NOT BE REPRODUCED, ADAPTED OR FURTHER DISTRIBUTED, AND NO BUIILDINGS MAY BE CONSTRUCTED FROM THESE PLANS, WITHOUT WRITTEN PERMISSION OF ROMTEC, INC.

DATE: 8/4/2017
DRAWN BY: LS

()=REFERENCE DIMENSION
TOLERANCES (UNLESS OTHERWISE SPECIFIED)

FRACTIONS	±1/16
.XX	±.010
.XXX	±.005
ANGLES	±1/2°

DISPENSER

TP, SS 2-ROLL, THIN

REV	DESCRIPTION	DATE	BY
4	SEE MASTER PRODUCTION REVISION LIST	2/17/20	AM

BOM PART: 8403

SHEET 2 OF 3

DWG. NO. MI-011-5003

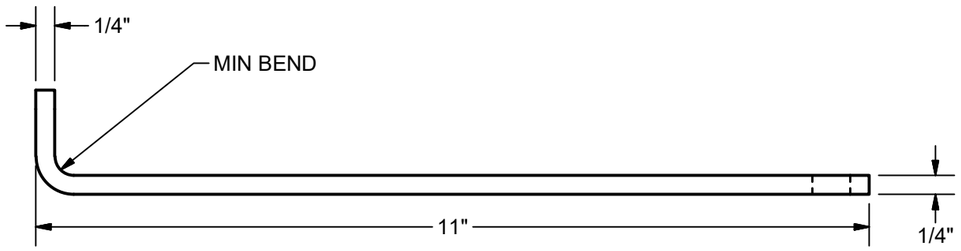

TOP VIEW
SCALE 1 / 2

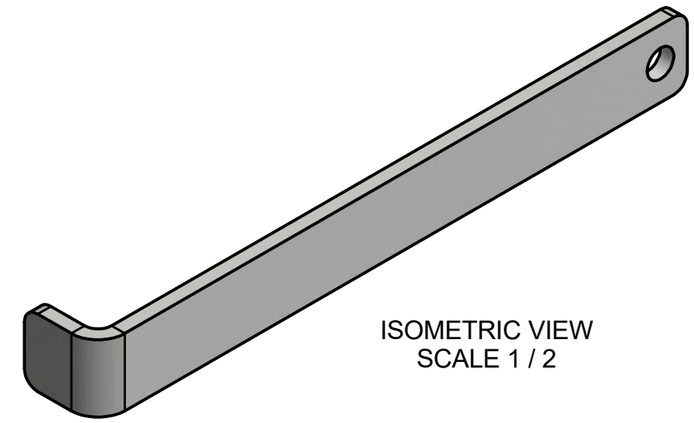

ISOMETRIC VIEW
SCALE 1 / 2

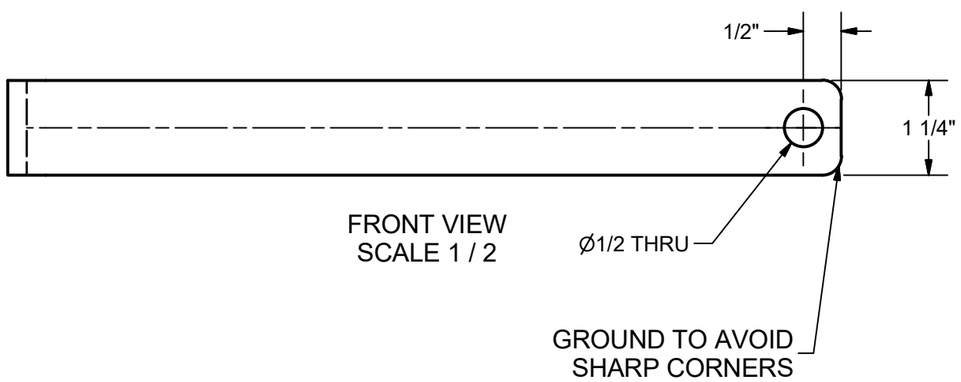

FRONT VIEW
SCALE 1 / 2

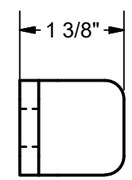

SIDE VIEW
SCALE 1 / 2

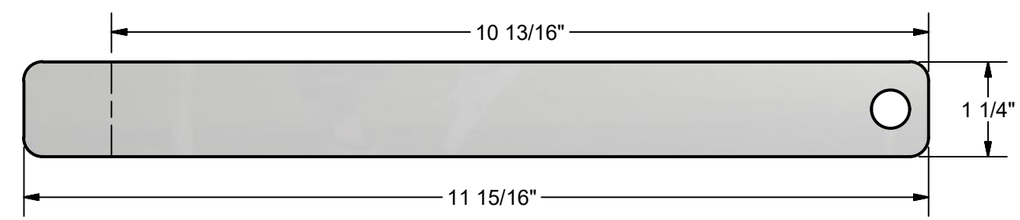

FLAT VIEW
SCALE 1 / 2

MATERIAL
STAINLESS STEEL

PLATE THICKNESS = $\frac{1}{4}$"

2 TOILET PAPER BAR, 2 ROLL

SCALE: 1/2

ROMTEC
18240 NORTH BANK ROAD
ROSEBURG, OR 97470
(541)-496-3541
FAX (541)-496-0803

MANUFACTURING

© 2017 ROMTEC, INC. ALL RIGHTS RESERVED. THESE PLANS AND DRAWINGS MAY NOT BE REPRODUCED, ADAPTED OR FURTHER DISTRIBUTED, AND NO BUIILDINGS MAY BE CONSTRUCTED FROM THESE PLANS, WITHOUT WRITTEN PERMISSION OF ROMTEC, INC.

DATE: 8/4/2017
DRAWN BY: LS

()=REFERENCE DIMENSION
TOLERANCES (UNLESS OTHERWISE SPECIFIED)

FRACTIONS	±1/16
.XX	±.010
.XXX	±.005
ANGLES	±1/2°

DISPENSER
TP, SS 2-ROLL, THIN

REV	DESCRIPTION	DATE	BY
4	SEE MASTER PRODUCTION REVISION LIST	2/17/20	AM

BOM PART: 8403
SHEET 3 OF 3
DWG. NO. MI-011-5003

6562

Soap Dispenser

- ✔ Tank Type Vertical **Bradex®**
- ✔ Surface-Mounted
- ✔ ADA Compliant

Product Materials

BODY: 20 gauge stainless steel with exposed surfaces in architectural satin finish.
BACK: 20 gauge stainless steel; heliarc welded to the body.
WALL PLATE: stainless steel.
SOAP VALVE: chrome-plated brass housing with ABS plastic mechanism.

Capacity

40-oz. liquid soap.

Operation

Push-in valve dispenses measured amount of vegetable or coconut oil liquid soaps, synthetic detergents, and antiseptic solutions with less than 5 lbs. of force. Sight gauge indicates refill time. Locked filler top opens with special key provided.

✔ Bradley liquid soap valves operate best with any vegetable oil or coconut oil hand soap having a 10–15% soap concentration.

Installation

Verify all rough-in dimensions prior to installation. Secure separate mounting bracket to wall. Slide dispenser into place and secure locking screw through filler hole.

Guide Specification

Surface-mounted liquid soap dispenser shall be fabricated of 20 gauge satin finish stainless steel. Dispenser shall have completely concealed mounting, vandal-resistant filler hole cover and sight gauge. Push-in corrosion-resistant liquid soap valve. Capacity: 40-oz. liquid soap. Requires less than 5 lbs. of force to dispense soap.

Overall dimensions: 4 13/16"W x 8 3/16"H x 2 7/8"D.

ADA Compliant

- ✔ Consult local and national accessibility codes for proper installation guidelines.
- ✔ Conformity and compliance to local and national codes is the responsibility of the installer.

Orders composed of products indicated as **Bradex®** will be available to ship in three days after receipt of order at the factory. There is no pricing penalty for this service from Bradley.

This information is subject to change without notice.

© 2014 Bradley
P.O. Box 309, Menomonee Falls, WI 53052-0309
800 BRADLEY (800 272 3539) +1 262 251 6000
bradleycorp.com

Dimensions

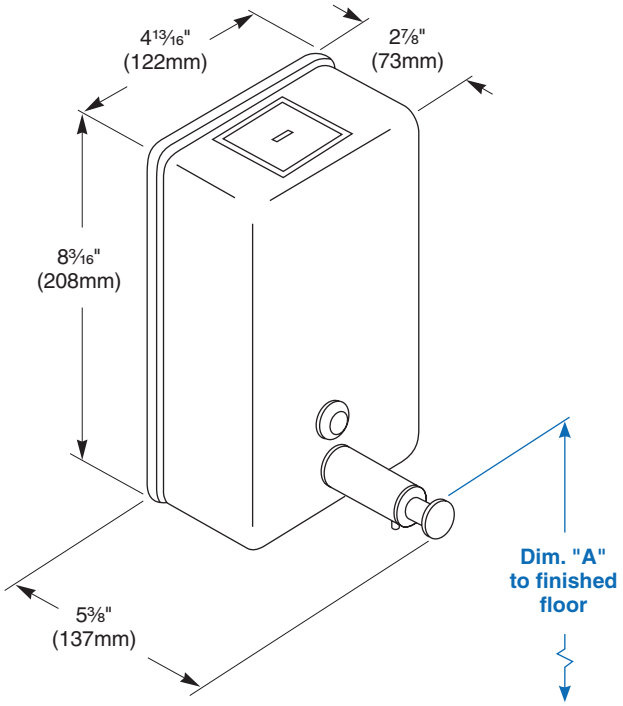

Dim. "A" Key Surface:	For Dim. "A"	Top of Unit	Bottom of Unit
Push button top to finished floor	40" (1016mm)	46¾" (1187mm)	38½" (978mm)
	38" (965mm)	44¾" (1137mm)	36½" (927mm)
	36" (914mm)	42¾" (1086mm)	34½" (876mm)
	34" (864mm)	40¾" (1035mm)	32½" (826mm)
Rough wall opening:			
Surface Mount:	No rough wall opening, see overall dimensions		

Orders composed of products indicated as **Bradex**® will be available to ship in three days after receipt of order at the factory. There is no pricing penalty for this service from Bradley.

This information is subject to change without notice.

© 2014 Bradley
P.O. Box 309, Menomonee Falls, WI 53052-0309
800 BRADLEY (800 272 3539) +1 262 251 6000
bradleycorp.com

☐ Model 377 — 13-gallon Capacity
☑ Model 377-36 — 21-gallon Capacity No Lid
☐ Model 377-38 — 36-gallon Capacity

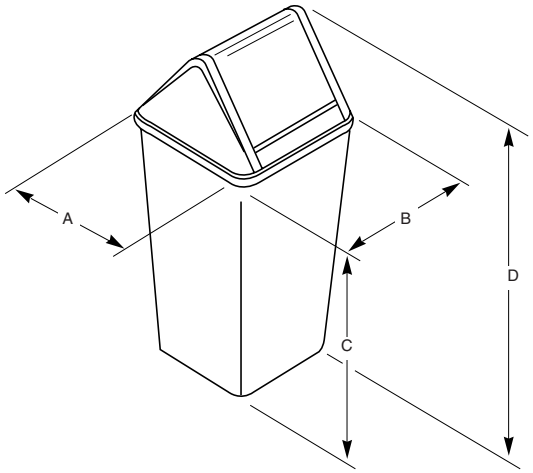

Product Materials

RECEPTACLE: heavy gauge stainless steel with exposed surfaces in architectural satin finish. Equipped with vinyl wall bumper strip and rubber feet.

TOP: heavy gauge stainless steel. Swing door is counter-balanced for easy operation. See "Additional Parts for Purchase" section below. Swing Top only parts available.

Capacity

Model 377 — 13 gal. (1.8 cu. ft.); Model 377-36 — 21 gal. (2.9 cu. ft.); Model 377-38 — 36 gal. (4.9 cu. ft.)

Operation

Top lifts off to remove liner (by others).

Installation

Verify all rough-in dimensions prior to installation. Freestanding unit requires no fasteners.

Optional Features

Feature	Suffix
☐ Less swing top	-37

Guide Specification

Freestanding waste receptacle shall be fabricated of heavy gauge stainless steel with exposed surfaces in satin finish. Swing top allows access from 2 sides. Capacity 13 gal. (21 gal., 36 gal.).

Overall dimensions: Refer to table and drawing for details.

Additional Parts for Purchase

Model (Swing Top Only)	Part No.
☐ 377-000000, 13-gallon	P15-025
☐ 377-360000, 21-gallon	P15-098
☐ 377-380000, 36-gallon	P15-195

Dimensions			
Model	A & B	C	D
377	13" (330 mm)	22" (559 mm)	29" (737 mm)
377-36	15" (381 mm)	30" (762 mm)	38" (965 mm)
377-38	19" (483 mm)	29" (737 mm)	39" (991 mm)

ADA Compliant

- ☑ Consult local and national accessibility codes for proper installation guidelines.
- ☑ Conformity and compliance to local and national codes is the responsibility of the installer.

Washroom Accessories
Document No. 8330

This information is subject to change without notice.

© 2014 Bradley
P.O. Box 309, Menomonee Falls, WI 53052-0309
800 BRADLEY (800 272 3539) +1 262 251 6000
bradleycorp.com

KOALA KARE PRODUCTS
KB200-SS HORIZONTAL WALL MOUNTED
BABY CHANGING STATION WITH STAINLESS STEEL VENEER

KB200-01SS GREY
KB200-05SS WHITE GRANITE

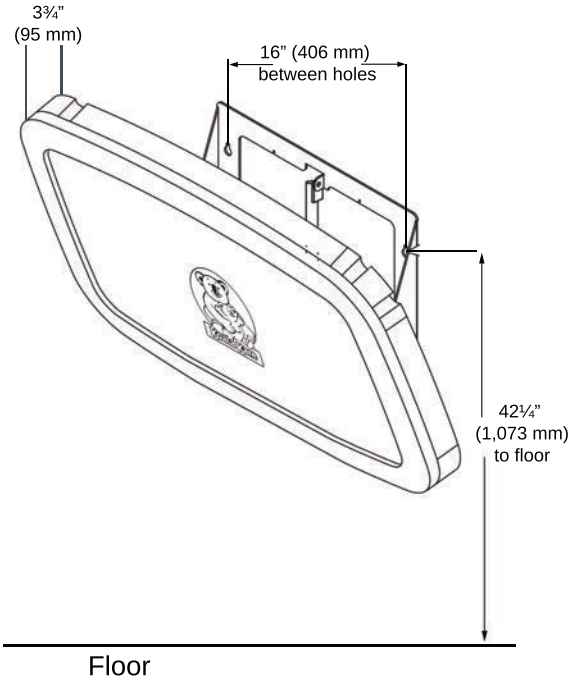

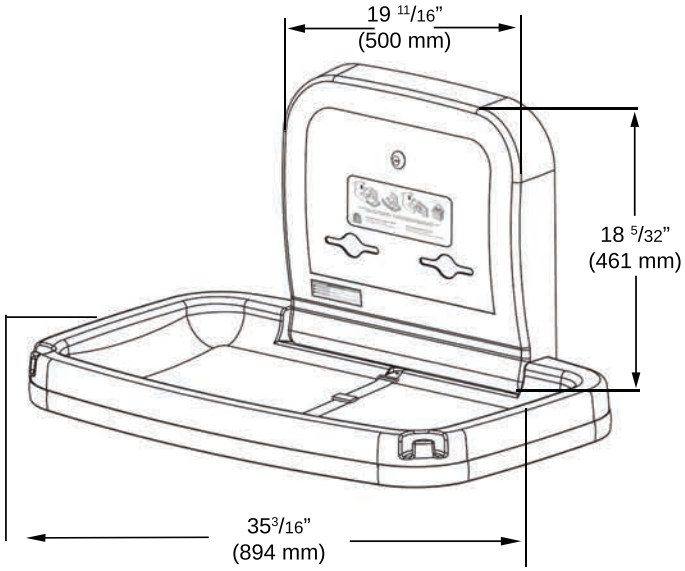

Celebrating 25 Years
Koala Kare

KB200-SS TECHNICAL DATA SHEET

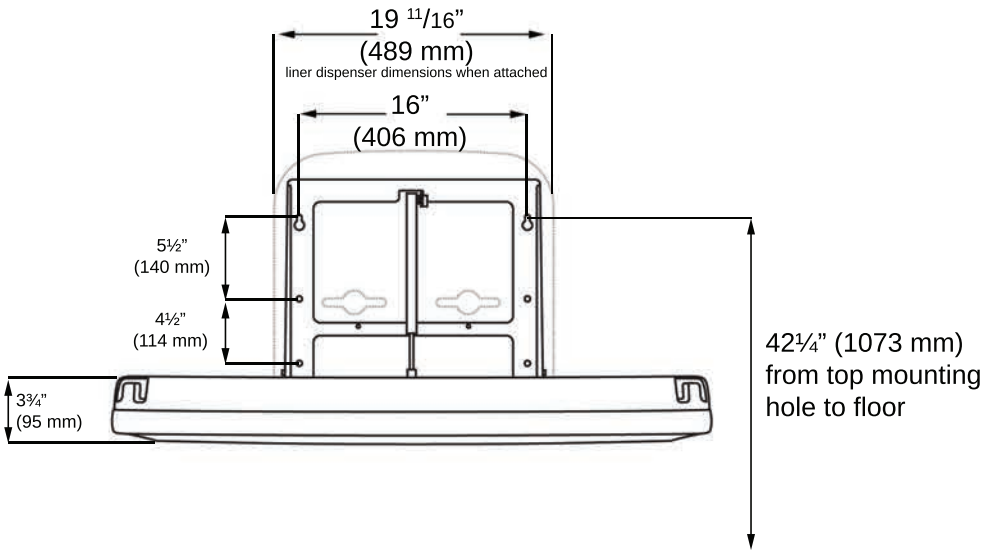
19 11/16”
(489 mm)
liner dispenser dimensions when attached
16”
(406 mm)
5½”
(140 mm)
4½”
(114 mm)
3¾”
(95 mm)
42¼” (1073 mm)
from top mounting
hole to floor

Floor

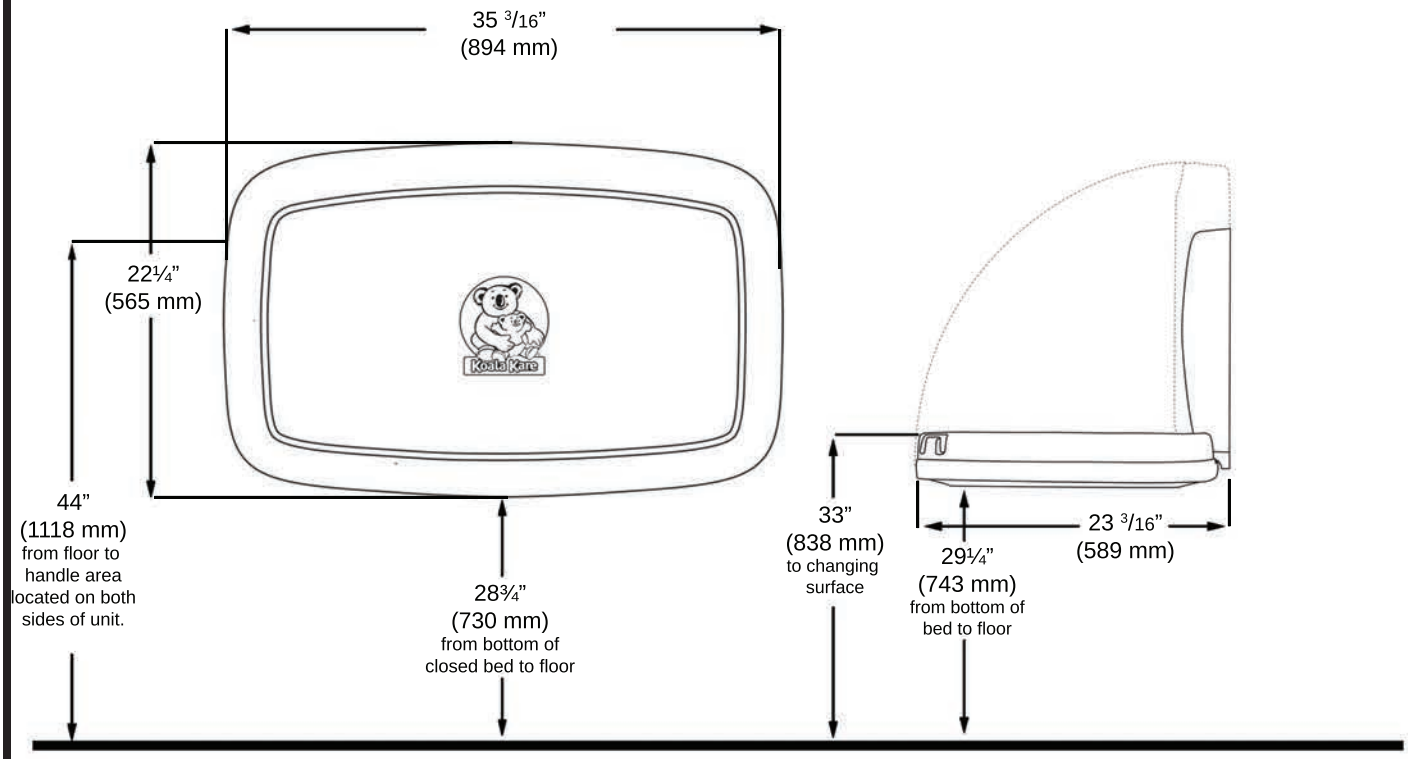
35 3/16”
(894 mm)
22¼”
(565 mm)
Koala Kare
44”
(1118 mm)
from floor to
handle area
located on both
sides of unit.
28¾”
(730 mm)
from bottom of
closed bed to floor
33”
(838 mm)
to changing
surface
29¼”
(743 mm)
from bottom of
bed to floor
23 3/16”
(589 mm)

Floor

MATERIALS:

FDA approved injection-molded polypropylene with Microban® antimicrobial additive embedded into the bed surface. Type 304 brushed stainless steel finish veneer. Reinforced steel-on-steel hinge mechanism and metal mounting chassis with mounting hardware included. Labelled usage instructions and safety messages in four languages. Optional Braille label available. Contoured changing surface area is 450 sq. in (2903 sq. cm) and comes complete with nylon safety strap and bag hooks. Dual cavity liner dispenser holds approximately 50 KB150-99 bed liners.

OPERATION:

Concealed pneumatic cylinder and metal mounting chassis provides controlled, slow opening and closing of bed. Polypropylene is easy to clean and resists odors and bacterial growth. Complies with ASTM static load performance requirements when properly installed.

Warning: To ensure that the unit supports the intended loads, baby changing stations must be properly installed according to the manufacturer's instructions.

SPECIFICATION:

Baby changing station body shall be durable, injection-molded polypropylene. Design of unit shall be surface-mounted. Front surface of unit shall have a 304 brushed stainless steel finish veneer. Unit shall be equipped with a pneumatic cylinder for controlled opening and closing of bed. Bed shall be secured to metal mounting chassis with a concealed steel-on-steel hinge. No hinge structure shall be exposed on interior or exterior surfaces. Unit shall have mounting hardware included. Unit shall have Microban® antimicrobial embedded into plastic material on the changing surface. Unit shall comply with ADA regulations when properly installed. Bed shall have smooth concave changing area with a nylon safety strap and two hooks for bags or purses. The design and manufacture of Koala products Is intended to be compliant with the 2010 ADA Standards for Accessible Design and the 2009 ICC A117.1, Accessible and Usable Buildings and Facilities. Unit shall conform to ASTM F 2285-04 Standard Safety Performance Specification for Diaper Changing Tables for Commercial Use, ANSI Z535.4 Product Safety Signs and Labels, EN 12221:2008, ASTM G22 Antibacterial standards or local code if more stringent installation requirements are applicable for Barrier-Free accessibility.

Unit shall have a built-in Liner Dispenser for use with 3-ply chemical free biodegradable bed liners, instructional graphics and safety messages in 4 languages. Optional Braille label is available. Unit shall be backed by manufacturer's 5-year limited warranty on materials and workmanship and include a provision for replacement caused by vandalism. Unit shall be manufactured in the U.S.A.

INSTALLATION:

To ensure proper installation and compliance to building codes, it is recommended that a qualified person or carpenter perform the installation of the unit. The unit must be properly installed onto a permanent wall that is capable of supporting significant weight and can accommodate the supplied installation hardware. The Koala Baby Changing Station meets ADA regulations when properly installed. Installer should account for the space that a unit occupies when in the down position and with the caregiver (whether standing or seated) in front of the unit. Locate the unit so that paths of travel are maintained around it when being used.

Drilling holes and mounting the station:

1. Remove changing station from the shipping container and check for any freight damage. If damage is found, please call Koala Kare Products' Customer Service at 888.733.3456. Remove "Installation Kit" and "Operator Kit" from box. Please give "Operator Kit" to facility manager or operator. Box should contain two pieces: the bed and metal mounting chassis and the wall mount liner dispenser. Identify the best location for installing the unit.

2. Standard Installation- Remove the bed and chassis from the box and select the wall area where the unit will be installed. Make sure you have taken into consideration the operating clearance of 9½" (241 mm) on both sides of the exposed chassis and 23 $^{3}/_{16}$" (589 mm) from wall surface when open. Measure from the floor 42¼" (1073 mm) on stud center and mark the wall. The mounting holes are designed for 16" stud centers. Ensure the locations you have marked for the mounting holes are level before drilling. Drill pilot holes for keyhole mounting using a 1/8" regular drill bit.

Masonry or Tile over Stud Wall- Use a 7/32" (6 mm) masonry drill bit for the pilot hole until you hit the stud. Change bit to 1/8" (3 mm) regular drill bit.

Metal Stud or Concrete Block- If the wall has wood studs that are not on 16" (406 mm) centers, has metal studs or an underlying surface of concrete block, drill with a ½" (13 mm) masonry bit. (You may have to purchase toggles before installing.) You must allow a minimum of inside wall space for toggles to turn depending on toggles used. Insert and tighten toggles.

3. Screw two of the mounting screws into the pilot holes leaving ¼" (6 mm) exposed to allow keyhole slots to be easily mounted over the screw heads. Place chassis over screws. After securing the unit using the keyhole slots, verify that the unit is level. Tighten top two screws so that they are flush with the wall. Use the four lower holes as a guide to mark and drill pilot holes. Use remaining four screws and four washers to complete installation of bed and metal mounting bracket. Insert washers over lower four screws. All SIX screws and four washers must be mounted to the chassis.

4. Ensure liner dispenser is free from damage. Remove key, unlock, and open liner dispenser lid. This will expose liner dispenser mounting holes. Line up dispenser mounting holes onto chassis and secure with the four screws provided. Close and lock the liner dispenser door.

5. Remove protective covering from stainless steel on the front of unit. Going with the grain, use a stainless steel cleaning product and cotton rag to remove any residue that may remain.

6. Clean work area and inspect unit to ensure it opens and closes smoothly. Give Operator Kit and key to the facility operator. Replacement parts and additional liners can be purchased from your local distributor or by calling Koala at 888.733.3456 or 303.539.8300.

The illustrations and descriptions herein are applicable to production as of the date of this Technical Data Sheet. The manufacturer reserves the right to, and does from time to time, make changes and improvements in designs and dimensions without notice.

Celebrating 25 Years
Koala Kare

Koala Kare Products | 6982 S Quentin St. | Centennial, CO 80112 Toll Free: 888.733.3456 | 303.539.8300 | Fax: 303.539.8399
www.koalabear.com

P/N AB006 May 2012

KOALA KARE PRODUCTS
Installation and Operation Instructions

KB200
Baby Changing Station

Cambiador Plegable

Table à Langer

Babywickelstation

IMPORTANT. RETAIN FOR FUTURE REFERENCE. READ CAREFULLY.
IMPORTANTE. GUÁRDELO PARA FUTURAS CONSULTAS. LEER ATENTAMENTE.
IMPORTANT. À CONSERVER POUR INFORMATION. À LIRE ATTENTIVEMENT.
WICHTIG. ZUR SPÄTEREN BEZUGNAHME AUFBEWAHREN. BITTE SORGFÄLTIG DURCHLESEN.

Your unit should be installed to meet 2010 ADA Standards for Accessible Design when and where applicable.
You are responsible for the safe operation of this unit.

KB200 Operating Instructions

Please Note: To assure proper installation, it is suggested that a qualified person or carpenter install the Koala Baby Changing Station. Koala Kare Products will not be responsible if the station is not installed properly. Koala Baby Changing Stations have been tested to hold a substantial static load. The unit must be attached to a permanent wall that is capable of holding a substantial load. The maximum recommended total weight for this baby changing station (including baby and parcel bag) is 60 lbs. Excessive weight may cause a hazardous or unstable condition to exist.

Restraint System: To fasten the waist restraint strap, place strap around child's midsection, and push spring tabs into buckle until both spring tabs lock in place with an audible "click". Straps can be adjusted to make strap tighter or looser as required.

Inspection Criteria:

- A properly maintained baby changing station:
- Opens and closes smoothly
- Has both ends of a functioning, non-frayed strap:
  buckle clicks when closed and strap is attached to unit at both ends.
- Offers parents liners through a fully stocked liner dispenser. (Dispenser built into unit.)
- Provides a clean, convenient place for customers to attend to their children.

Tools Needed

gloves

drill

pencil

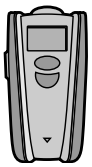
stud finder

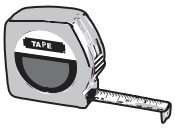

measuring tape

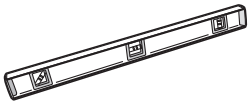
level

1/8" (3 mm) (regular & masonry) drill bits

Phillips head screwdriver

7/32" (6 mm) (regular & masonry) drill bits

½" (13 mm) (regular & masonry) drill bits

Hardware Provided

six ¼" x 3" Phillips panhead wood screws

four 8-32" x 5/16" flange button Phillips head screws

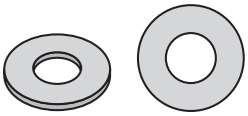
four ¼" flat washers

Horizontal Surface Mounted Baby Changing Station

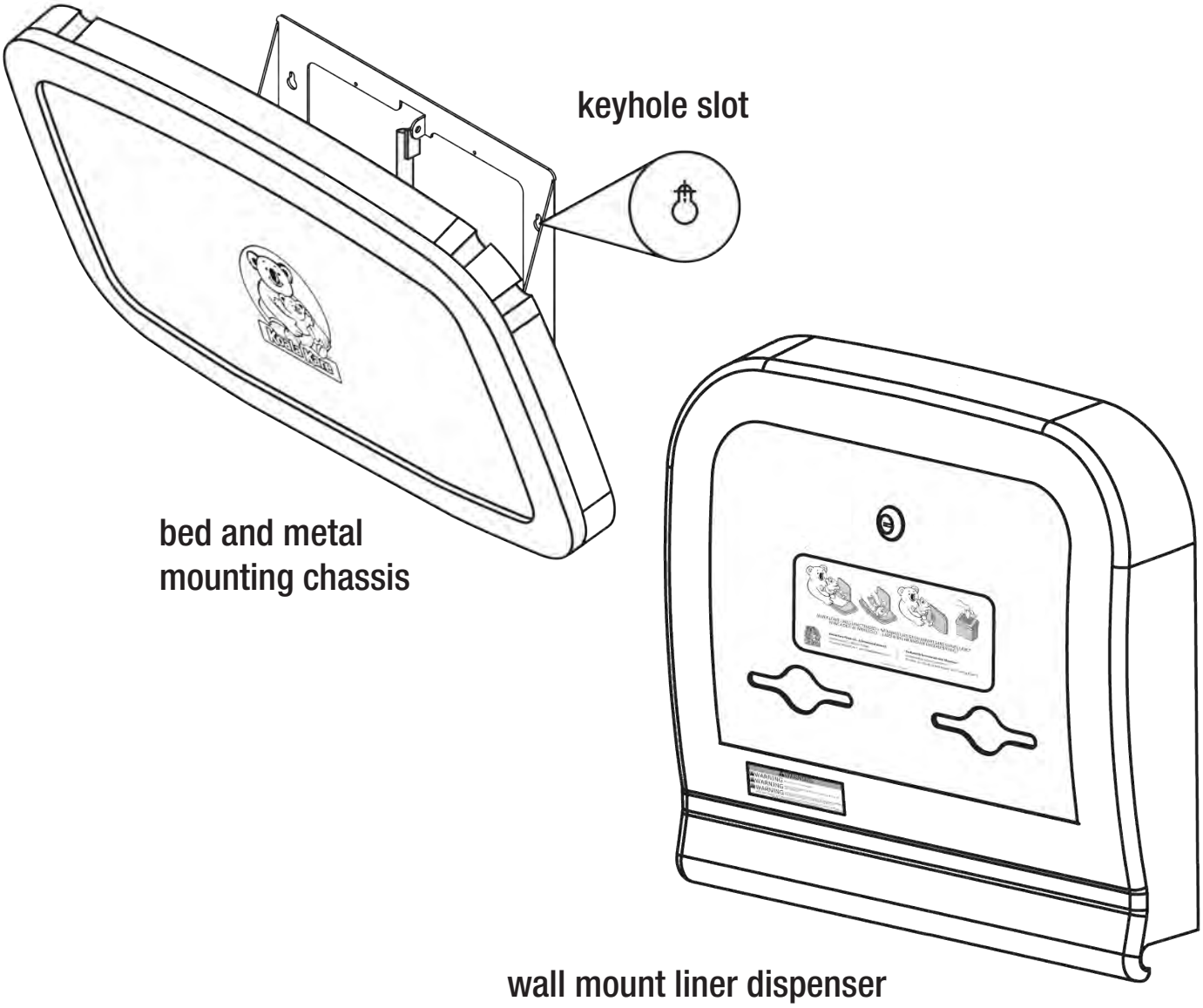

Step 1. Inspect Contents

Remove changing station from the shipping container and check for any freight damage. If damage is found, please call Koala Kare Products' Customer Service at 888.733.3456. Remove "Installation Kit" and "Operator Kit" from box. Please give "Operator Kit" to facility manager or operator. Box should contain two pieces: the bed and metal mounting chassis and the wall mount liner dispenser. Identify the best location for installing the unit.

Step 2. Prepare Mounting Surface

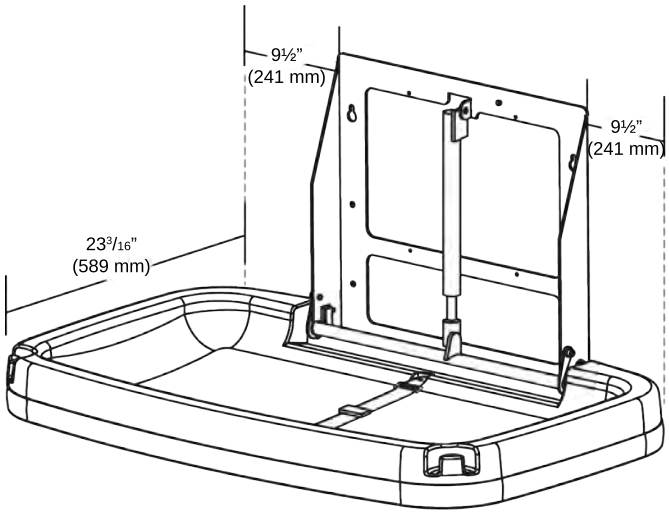

For Standard Installation

Remove the bed and chassis from the box and select the wall area where the unit will be installed. Make sure you have taken into consideration the operating clearance of 9½" (241 mm) on both sides of the exposed chassis and 23 3/16" (589 mm) from wall surface when open. Measure from the floor 42¼" (1073 mm) on stud center and mark the wall. The mounting holes are designed for 16" stud centers. Ensure the locations you have marked for the mounting holes are level before drilling. Drill pilot holes for keyhole mounting using a 1/8" regular drill bit.

For Masonry or Tile over Stud Wall

Use a 7/32" (5 mm) masonry drill bit for the pilot hole until you hit the stud. Change bit to 1/8" (3 mm) regular drill bit.

For Metal Stud or Concrete Block

If the wall has metal studs or an underlying surface of concrete block, you will need to use toggles. Additionally, if the wall has wooden studs that are not on 16" (406 mm) centers, you will need to use toggles to secure one side of the unit. The other side should be secured to the stud using the screws provided. You must allow for space inside the wall for the toggles to turn. This will vary depending on the toggles used.

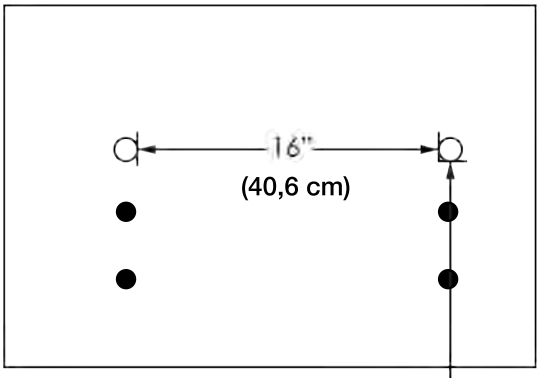

Important:
In Step 3, all SIX screws provided must be mounted to the chassis to ensure proper load bearing capacity!

Top two screws at 42¼" (107 cm) to meet ADA Height Requirements

Floor

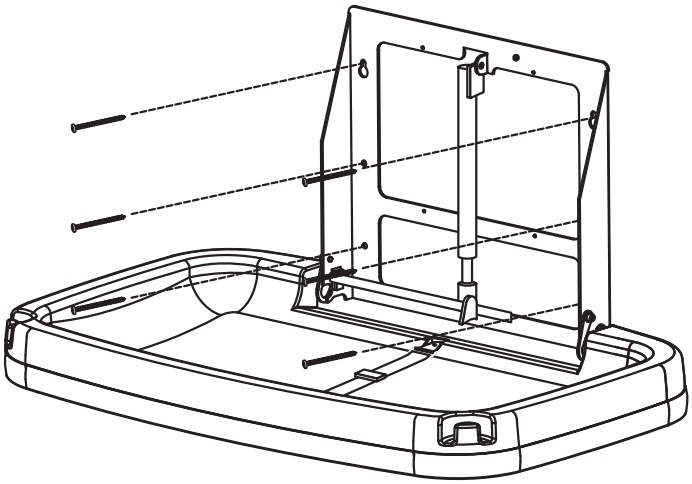

Step 3. Mount Bed and Chassis

Screw two of the mounting screws into the pilot holes leaving ¼" (6.35 mm) exposed to allow keyhole slots to be easily mounted over the screw heads. Place chassis over screws as shown in illustration. After securing the unit using the keyhole slots, verify that the unit is level. Tighten top two screws so that they are flush with the wall. Use the four lower holes as a guide to mark and drill pilot holes. Use remaining four screws and four washers to complete installation of bed and mounting bracket. Insert washers over lower four screws. All SIX screws and four washers must be properly mounted to the chassis.

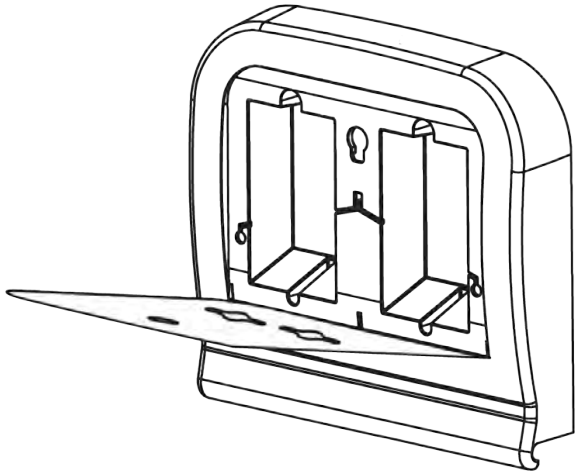

Step 4. Install Liner Dispenser

Ensure liner dispenser is free from damage. Remove key, unlock, and open liner dispenser lid. This will expose liner dispenser mounting holes. Line up dispenser mounting holes onto chassis and secure with the four screws provided. Close and lock the liner dispenser door.

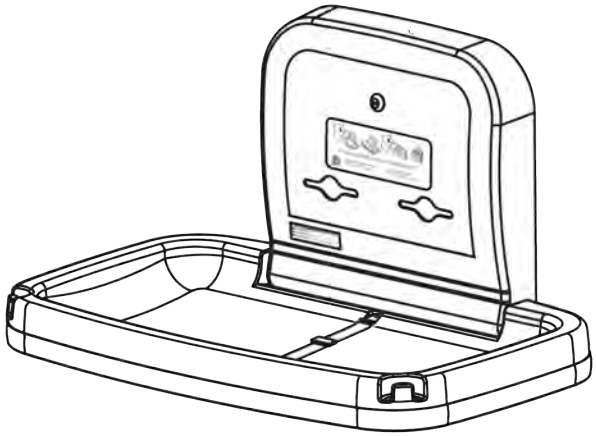

Step 5. Complete Installation

Clean work area and inspect unit to ensure it opens and closes smoothly. Give Operator Kit and key to the facility operator. Replacement parts and additional liners can be purchased from your local distributor or by calling Koala at 888.733.3456 or 303.539.8300.

ENGLISH

WARNING: Never leave child unattended.

WARNING: Avoid serious injury from falling or sliding out. Always use restraint system.

WARNING: Designed for Infants Only. Age up to 3.5 years and weighing less than 50 lb (22.7 kg). Keep one hand on the child at all times.

Parcels or accessory items, or both, placed on the unit may cause the unit to become unstable.

ESPAÑOL

ADVERTENCIA: No deje nunca al niño desatendido.

ADVERTENCIA: Evite que el niño se lesione por caerse o resbalarse del cambiador Use siempre el sistema de sujeción.

ADVERTENCIA: Diseñado exclusivamente para bebés. Hasta 3 años y medio de edad y con un peso inferior a 50 libras (22,5 kg aproximadamente). Mantenga siempre al niño sujeto con una mano.

Colocar paquetes o accesorios, o ambas cosas, encima del cambiador puede provocar que se desestabilice.

FRANÇAIS

ATTENTION: Ne laissez jamais un enfant sans surveillance.

ATTENTION: Évitez les blessures occasionnées par une chute ou une glissade. Utilisez toujours le système de retenue.

ATTENTION: Conçue uniquement pour les jeunes enfants. Jusqu'à 3 ans et demi et moins de 50 lb (23 kg). Conservez une main sur l'enfant à tout moment.

Tout paquet ou accessoire placé sur la table peut créer un déséquilibre.

DEUTSCH

WARNUNG: Das Kind niemals unbeaufsichtigt lassen.

WARNUNG: Ernsthafte Verletzungen durch Herausfallen oder Herausrutschen verhindern. Immer das Rückhaltesystem verwenden.

WARNUNG: Dieses Produkt ist nur für Kleinkinder bis zu 3 1/2 Jahren und einem Gewicht von höchstens 50 lbs. (23 kg) vorgesehen. Das Kind immer mit einer Hand festhalten.

Durch Ablegen von Päckchen und Zubehör auf der Wickelstation kann diese instabil werden.

KB200 Instrucciones de Uso

Atención: Para garantizar una instalación correcta, se sugiere que una persona capacitada o un carpintero instale el cambiador de pañales Koala Baby Changing Station. Koala Kare Products no se responsabilizará si el cambiador no se ha instalado adecuadamente. Las bases para el cambiador de pañales Koala Baby Changing Station se han probado para garantizar que soportan un peso estático considerable. La unidad debe ponerse en una pared inmóvil capaz de soportar un peso considerable. El peso total máximo recomendado para este cambiador de pañales (incluidos el bebé y la pañalera) es de 60 libras. Un peso excesivo puede crear situaciones peligrosas o inestabilidad.

Sistema de sujeción: Cuando se vaya a colocar la correa de sujeción a la cintura, colóquela rodeando la cintura del niño e introduzca las lengüetas de resorte en la hebilla hasta que ambas lengüetas encajen y oiga un chasquido. Las correas pueden ajustarse para apretarlas o aflojarlas según sea necesario.

Criterios de inspección:

- Un cambiador de pañales bien mantenido:
- Se abre y se cierra sin problemas.
- Tiene los dos extremos de la correa operativos y sin deshilachar: la hebilla hace clic cuando se cierra y la correa se ata correctamente a los dos extremos de la unidad.
- Ofrece a los padres forros mediante un dispensador que se halla muy bien provisto. (El dispensador está incorporado a la unidad).
- Proporciona un lugar limpio y cómodo para que los clientes puedan atender a sus niños.

Herramientas Necesarias

guantes

taladro

lápiz

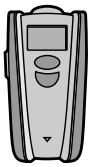
detector de tacos

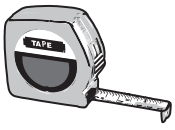

cinta métrica

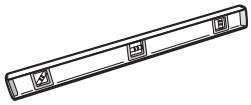
nivel

broca de 1/8” (3 mm) (normal y de mampostería)

destornillador de estrella

broca de 7/32” (6 mm) (normal y de mampostería)

broca de ½” (13 mm) (normal y de mampostería)

Materiales Suministrados

seis tornillos de estrella avellanados para madera de ¼” x 3” (6,3 mm x 76,2 mm)

cuatro tornillos con cabeza abridada de estrella de 8-32 x 5/16” (8 mm)

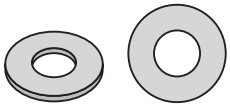
cuatro arandelas planas de ¼” (6,3 mm)

Cambiador Montado en Superficie Horizontal

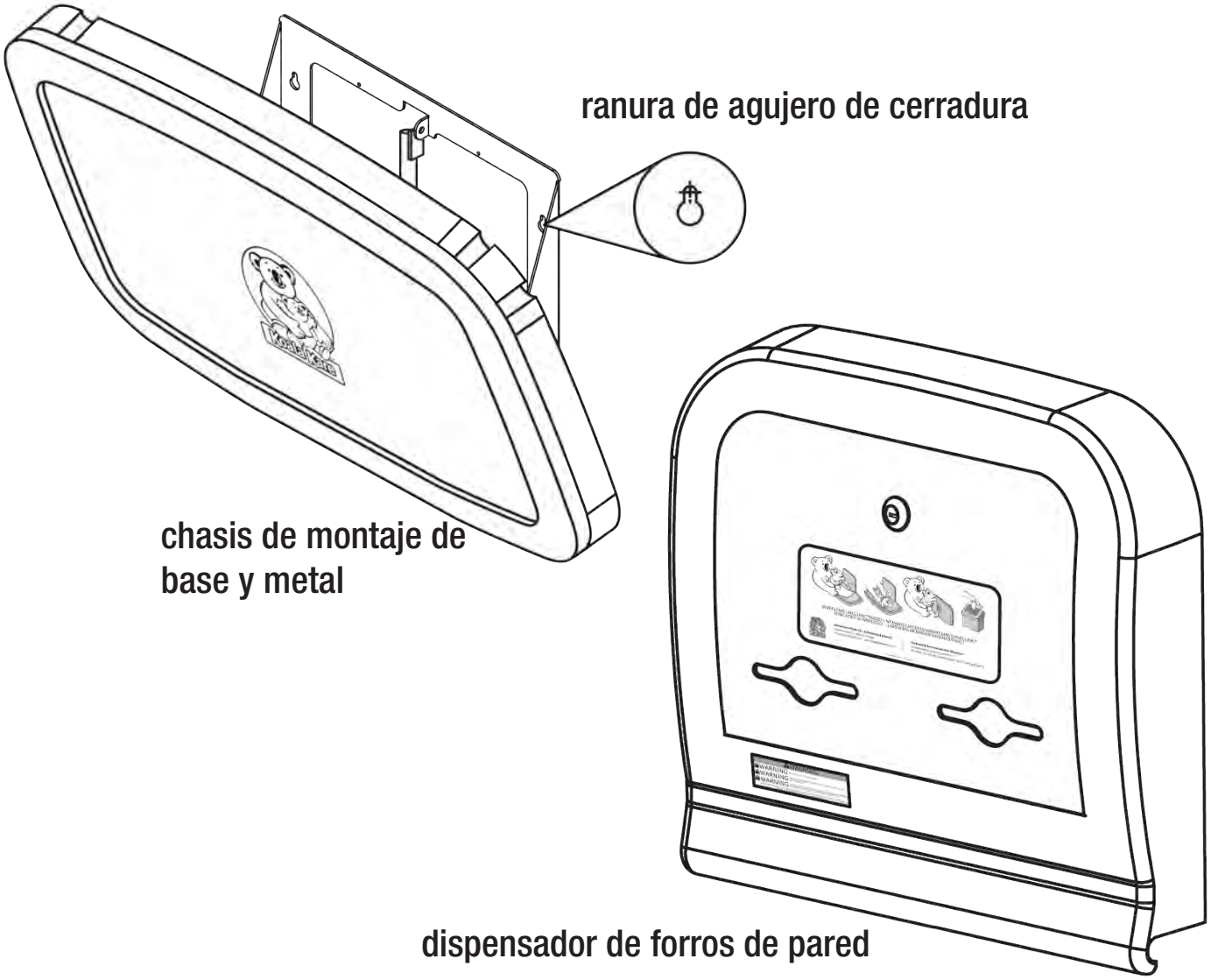

Paso 1. Inspeccione el contenido

Saque la base del cambiador de pañales de la caja de embalaje y compruebe que no haya sufrido daños durante el transporte. Si observa daños, póngase en contacto con el Servicio de atención al cliente de Koala Kare Products en el 888.733.3456. Retire de la caja el “Paquete de instalación” y el “Paquete del operario”. Entregue el “Paquete del operario” al responsable u operario de la instalación. La caja debe contener dos piezas que incluyen la cama y el chasis de metal de montaje y el dispensador de pared. Localice el mejor lugar para instalar la unidad.

Paso 2. Prepare la superficie de montaje

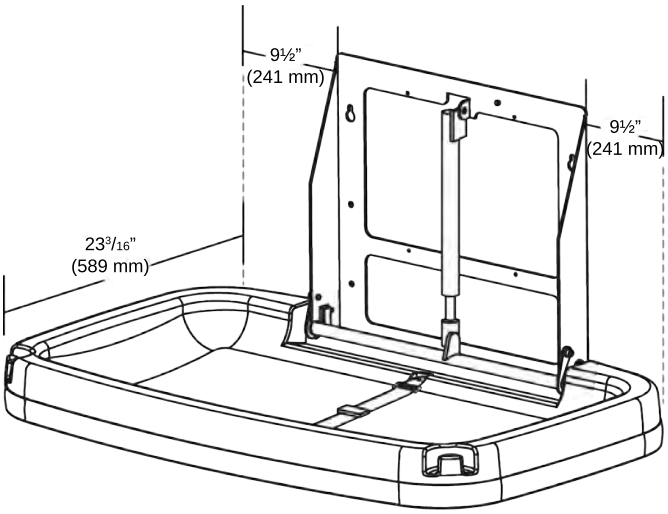

Para instalación estándar

Retire de la caja la cama y el chasis y seleccione la zona de la pared donde va a instalar la unidad. Asegúrese de tener en cuenta la holgura de funcionamiento de 9½” (24.1 cm) a ambos lados del chasis y 23 3/16” (58.9 cm) desde la superficie de la pared al abrir. Mida desde el suelo 42¼” (107 cm) sobre el centro del taco y marque la pared. Los orificios de montaje están diseñados para centros de taco de 16” (40.6 cm). Asegúrese de que los puntos que ha marcado para los orificios de montaje están nivelados antes de taladrar. Taladre orificios de muestra para el montaje del agujero de cerradura. Use una broca normal de 1/8” (3 mm).

Para mampostería o azulejos sobre la pared de los tacos

Use una broca de mampostería de 7/32” (5 mm) para taladrar un agujero de muestra hasta que llegue al taco. Cambie a una broca normal de 1/8” (3 mm).

Para tacos de metal o bloques de hormigón

Si la pared tiene tacos de madera que no están a una distancia de 16” (406 mm), tiene tacos de metal o una superficie subyacente de bloque de hormigón, taladre con una broca de 1/2” (12 mm) para mampostería. (Quizá tenga que comprar pasadores antes de instalar). Debe permitir un mínimo de espacio interior en la pared para que los pasadores giren según el tipo que use. Introduzca los pasadores y apriételos.

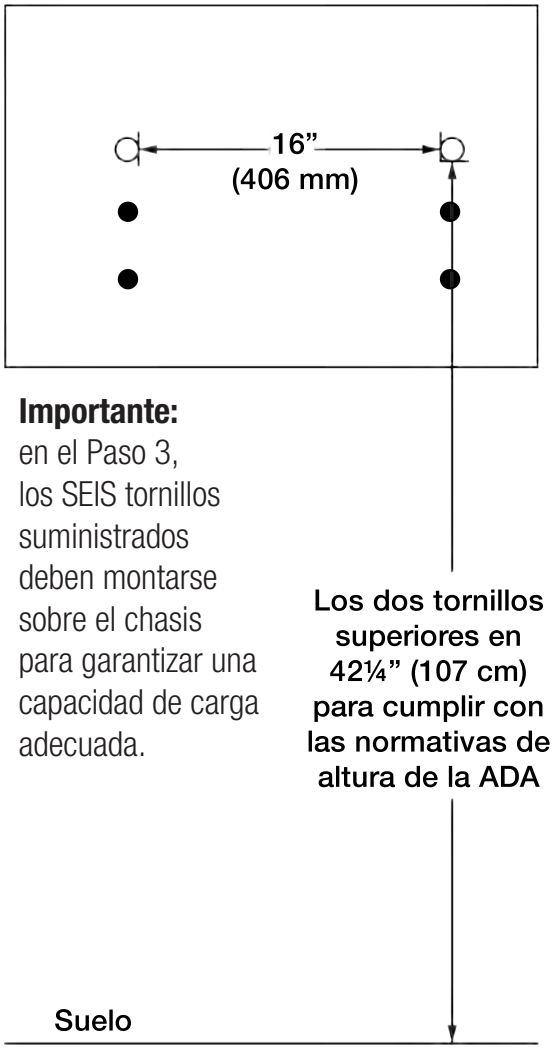

Importante:
en el Paso 3, los SEIS tornillos suministrados deben montarse sobre el chasis para garantizar una capacidad de carga adecuada.

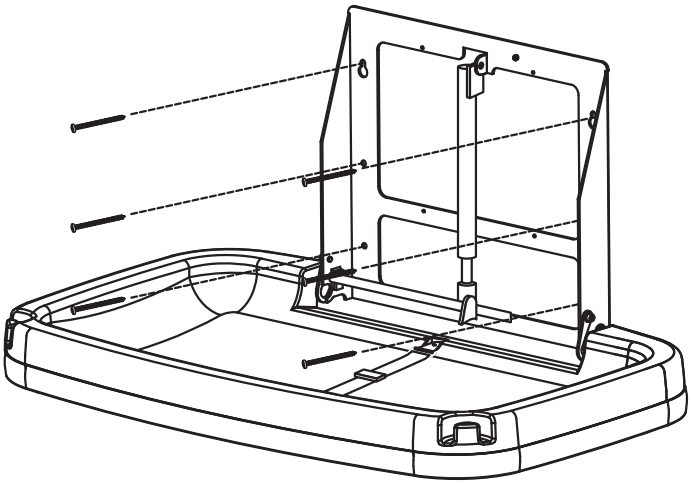

Paso 3. Montaje de la cama y el chasis
Atornille dos de los tornillos de montaje en los orificios de muestra dejando 1/4” (6,3 mm) abierto para permitir que las ranuras del agujero de cerradura se monten con facilidad sobre las cabezas de los tornillos. Coloque el chasis sobre los tornillos como muestra la ilustración. Tras apretar la unidad usando las ranuras de agujero de cerradura, verifique si la unidad está nivelada. Apriete los dos tornillos superiores para que estén a nivel con la pared. Use los cuatro orificios inferiores como guía para marcar y taladrar los orificios de muestra. Use los cuatro tornillos y cuatro arandelas planas restantes para completar la instalación de la cama y el soporte de montaje. Los SEIS tornillos y cuatro arandelas planas deben montarse sobre el chasis.

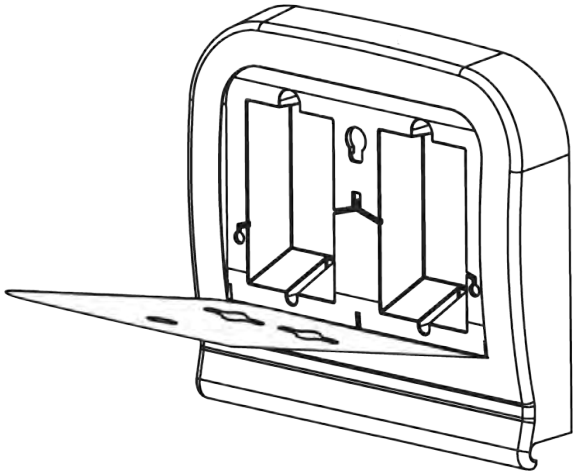

Paso 4. Instale el dispensador de forros
Compruebe que el dispensador no esté dañado. Retire la llave, desbloquee y abra la tapa del dispensador de forros. Esto expondrá los orificios de montaje del dispensador de forros. Alinee los orificios de montaje del dispensador sobre el chasis y apriételo con los cuatro tornillos suministrados. Cierre y eche la llave en la puerta del dispensador.

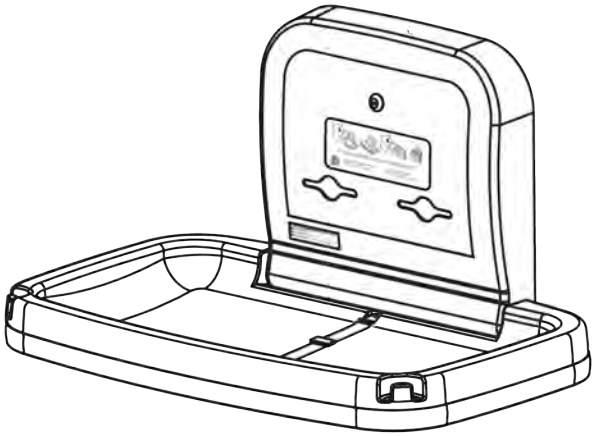

Paso 5. Complete la instalación
Limpie la zona de trabajo e inspeccione la unidad para asegurarse de que abre y cierra con suavidad. Entregue el Paquete del operario y la llave al operario de la instalación. Las piezas de repuesto y los forros adicionales se pueden adquirir de su distribuidor local o llamando a Koala al 888.733.3456 o al 303.539.8300.

KB200 Mode D'Emploi

Veuillez noter: La table à langer Koala doit être installée par une personne qualifiée ou un menuisier afin de garantir une installation correcte. La responsabilité des produits Koala Kare n'est pas engagée si la table n'est pas bien installée. Les tables à langer Koala ont été testées pour supporter une charge statique importante. La table à langer doit être fixée à un mur permanent pouvant supporter un poids important. La table à langer doit être fixée à un mur permanent pouvant supporter un poids important. Le poids maximum recommandé pour cette table à langer (bébé et sac à langer inclus) est de 60 livres. Un poids excessif peut créer une situation dangereuse ou instable.

Système de retenue: Pour attacher la sangle de retenue au niveau de la taille, placez la sangle autour du ventre de l'enfant et poussez les languettes dans la boucle jusqu'à ce qu'elles se verrouillent en place avec un « clic » audible. Les sangles peuvent être réglées en fonction des besoins.

Critères d'inspection:

- Une table à langer bien entretenue:
- S'ouvre et se ferme en douceur.
- Est dotée d'une sangle en bon état, sans effilochure, munie des deux extrémités : la boucle clique lorsqu'on la ferme et la sangle est attachée aux deux extrémités de la table.
- Offre aux parents des alaises jetables au moyen d'un distributeur d'alaises plein. (Le distributeur est intégré à la table à langer).
- Fournit un endroit propre et pratique permettant aux clients de prendre soin de leurs enfants.

Outils Nécessaires

gants

perceuse

crayon

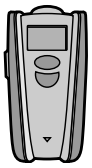
détecteur de poteau de cloison

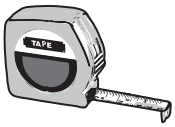

mètre

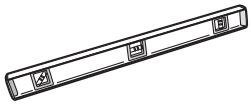
niveau

mèche 1/8 po (3 mm) (standard et maçonnerie)

tournevis à tête cruciforme

mèche 7/32 po (6 mm) (standard et maçonnerie)

mèche ½ po (13 mm) (standard et maçonnerie)

Visserie Fournie

six vis à bois à tête cylindrique cruciforme ¼ x 3 po (63,5 x 76,1 mm)

quatre vis à bouton cruciforme avec flancs de 8-32 x 5/16 po [(M4, 17-0-0,794 x 7,94 mm)]

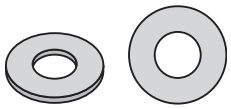
quatre rondelles plates ¼ po (63,5 mm)

Table à Langer Horizontale Montée en Surface

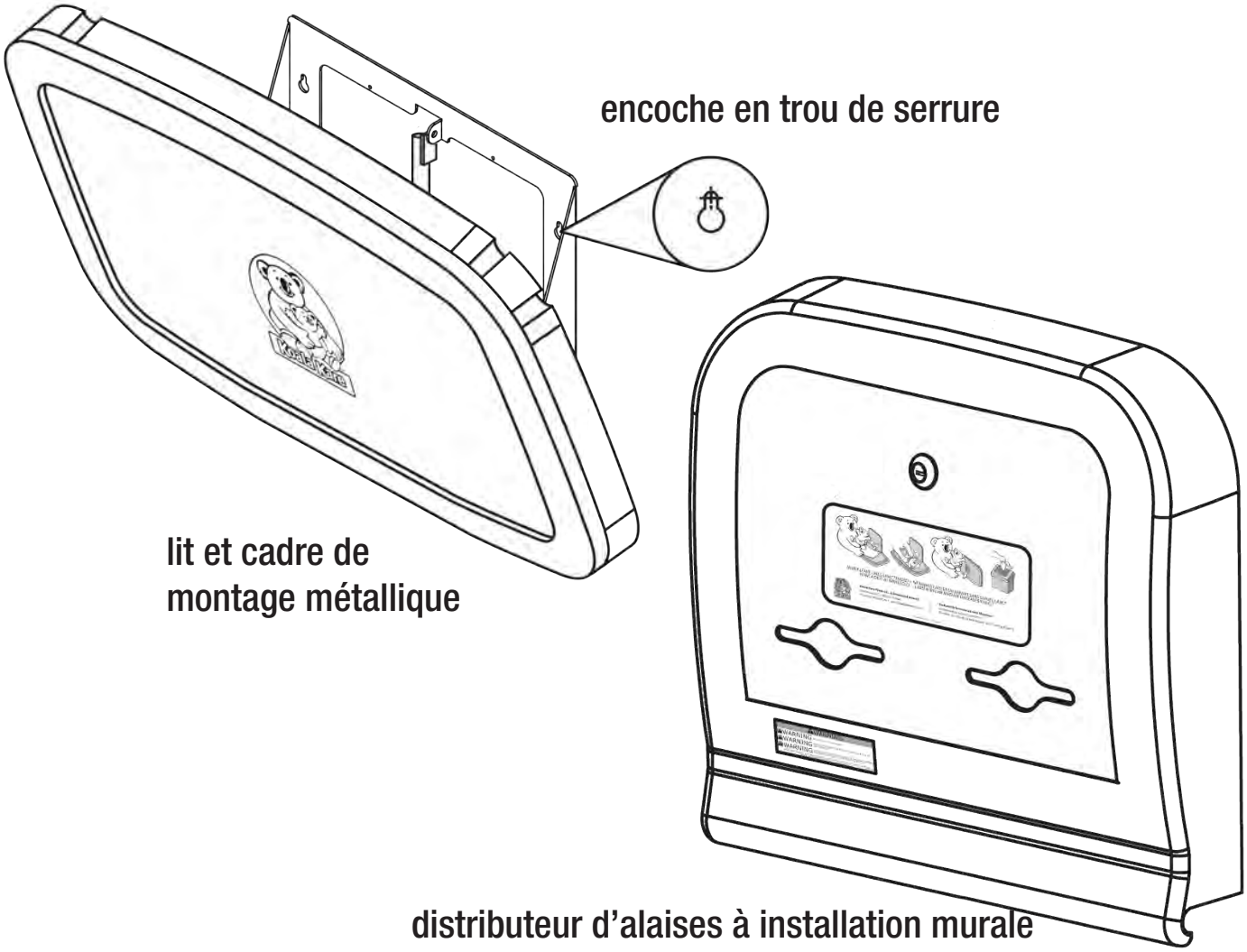

Étape 1. Inspectez le contenu

Retirez la table à langer du carton d'emballage et vérifiez qu'elle n'a pas été endommagée durant le transport. Si le contenu est endommagé, veuillez appeler le Service clientèle de Koala Kare Products au 1.888.733.3456. Retirez les modules « Installer's Packet » (Module installateur) et « Operator's Packet » (Module opérateur) du carton. Remettez le module « Operator's Packet » au responsable du site ou à l'opérateur. Le carton doit contenir deux pièces, dont le lit et le cadre de montage métallique et le distributeur d'alaises à installation murale. Identifiez le meilleur endroit pour installer la table à langer.

Étape 2. Préparez la surface de montage

Pour une installation standard

Retirez le lit et le cadre du carton, puis sélectionnez l'emplacement sur le mur où la table à langer sera montée. Réservez une distance de dégagement de 9 ½ po (24,1 cm) de chaque côté du cadre exposé et de 23 3/16 po (58,9 cm) par rapport à la surface du mur en position d'ouverture. Mesurez une distance de 42 ¼ po (107 cm) du sol jusqu'au poteau de cloison et marquez le mur. Les trous de fixation sont conçus pour des poteaux de cloison de 16 po (40,6 cm). Vérifiez que les emplacements marqués pour les trous de montage sont à niveau avant de percer les trous. Percez les trous pilotes pour le montage en trou de serrure. Utilisez une mèche standard de 1/8 po (3 mm).

Pour la maçonnerie ou le carrelage sur poteaux

Utilisez une mèche de maçonnerie de 7/32 po (5 mm) pour le trou pilote jusqu'au contact avec le poteau. Remplacez la mèche par une mèche standard de 1/8 po (3 mm).

Pour poteau métallique ou bloc de béton

Si les murs ont des poteaux en bois qui ne sont pas situés tous les 16 po (40,6 cm), s'ils ont des poteaux métalliques ou s'ils présentent une couche de ciment sous-jacente, utilisez une mèche pour maçonnerie de ½ po (12 mm) pour percer. Il faut parfois acheter des boulons à ailettes avant l'installation. Selon le type de boulons à ailettes utilisé, prévoyez un espace minimum dans le mur pour pouvoir tourner les boulons à ailettes. Insérez et serrez les boulons à ailettes.

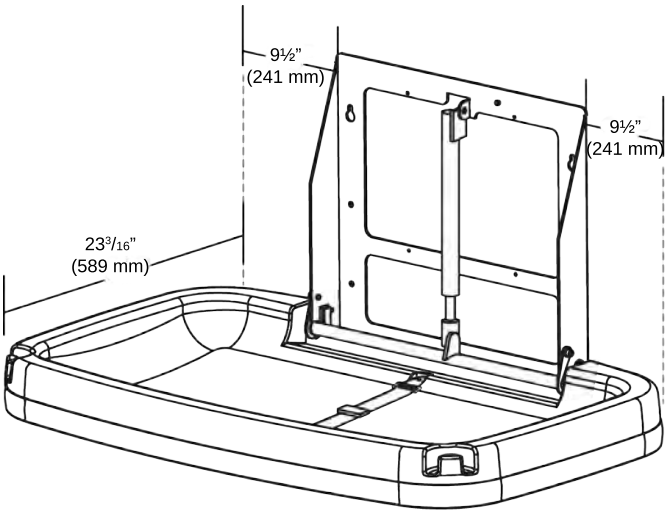

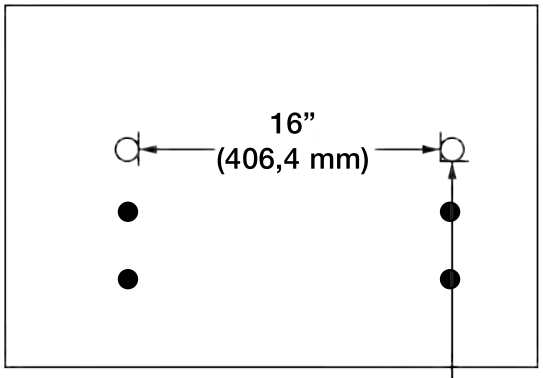

Important: dans l'étape 3, les SIX vis fournies doivent être montées sur le cadre pour garantir la capacité porteuse appropriée !

Les deux encoches supérieures à 42¼" (1,07 m) conformément aux caractéristiques de hauteur ADA

Sol

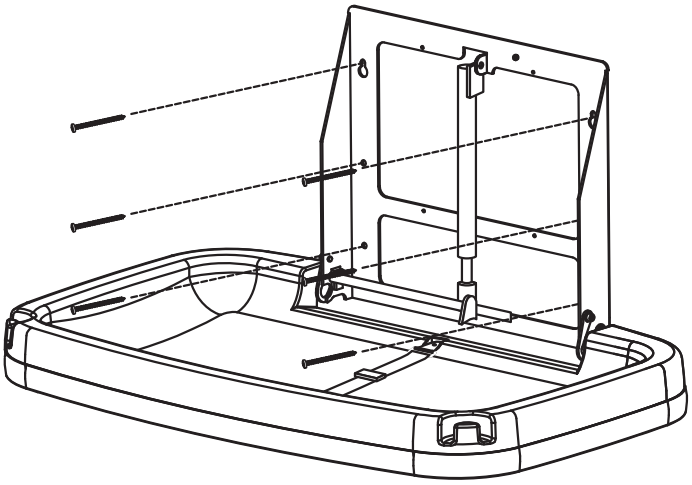

Étape 3. Montez le lit et le cadre

Vissez deux vis de montage dans les trous pilotes en exposant ¼ po (6,35 mm) afin de pouvoir monter facilement les encoches en trou de serrure sur les têtes de vis. Placez le cadre sur les vis conformément à l'illustration. Après avoir fixé la table à langer à l'aide des encoches en trou de serrure, vérifiez que la table est à niveau. Serrez les deux vis supérieures de sorte qu'elles affleurent contre le mur. Utilisez les quatre trous inférieurs comme repère pour marquer et percer les trous pilotes. Utilisez les quatre vis et les quatre rondelles plates restantes pour compléter l'installation du lit et du support de montage. Les SIX vis et les quatre rondelles plates doivent être montées sur le cadre.

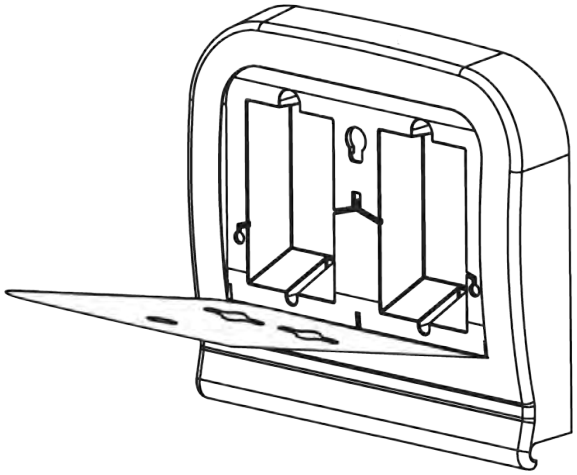

Étape 4. Installez le distributeur d'alaises

Vérifiez que le distributeur d'alaises n'est pas endommagé. Enlevez la clé, débloquez le couvercle et ouvrez le distributeur d'alaises. Les trous de montage du distributeur d'alaises sont maintenant exposés. Alignez les trous de montage du distributeur d'alaises sur le cadre et fixez la table à langer avec les quatre vis fournies. Refermez et verrouillez le volet du distributeur d'alaises.

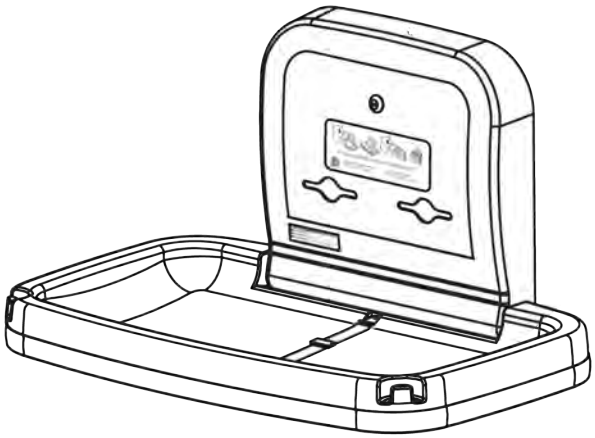

Étape 5. Terminez l'installation

Nettoyez la zone de travail et inspectez la table à langer pour vérifier qu'elle s'ouvre et se ferme facilement. Remettez le module « Operator's Packet » et la clé à l'opérateur du site. Les pièces détachées et des alaises supplémentaires peuvent être achetées auprès de votre distributeur local ou en appelant Koala au 1.888.733.3456 ou 1.303.539.8300.

KB200 Gebrauchsanleitung

Bitte beachten: Um die sachgerechte Montage der Koala Babywickeltisch zu gewährleisten, empfehlen wir, diese Tätigkeit von einer Fachkraft bzw. einem Tischler ausführen zu lassen. Koala Kare Products haftet nicht bei Schäden, die durch die unsachgemäße Montage der Wickeltisch entstehen. Koala Babywickeltischen wurden mit erheblicher statischer Last getestet. Das Produkt muss an einer festen Wand montiert werden, die für eine erhebliche Belastung geeignet ist. Das maximale empfohlene Gesamtgewicht für diese Babywickelstation (einschließlich Baby und Wickeltasche) beträgt 60 lbs. Durch überhöhtes Gewicht kann es zu gefährlichen oder unsicheren Situationen kommen.

Haltesystem: Zur Befestigung des Taillengurts legen Sie den Gurt um die Mitte des Kindes und stecken die Federlaschen in die Schnalle, bis beide Federlaschen mit einem „Klick“ hörbar einrasten. Die Gurte sind verstellbar und können weiter oder enger gestellt werden.

Sicherheitsüberprüfung:

- Eine ordnungsgemäß funktionierende Babywickeltisch:
- Lässt sich leicht öffnen und schließen.
- Weist beide Verschlussteile und einen funktionierenden, nicht ausgefransten Gurt auf: Gurtschloss klickt beim Einrasten und Gurt ist an beiden Seiten fest mit dem Produkt verbunden.
- Stellt Eltern aus einem voll bestückten Spender abrollbare Papierauflagen zur Verfügung. (Der Spender ist fester Bestandteil des Produkts.)
- Bietet Kunden einen sauberen und praktischen Platz für die Pflege ihres Kindes.

Erforderliche Werkzeuge

handschuhe

bohrmaschine

bleistift

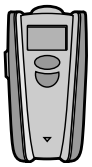
ständerdetektor

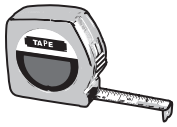

maßband

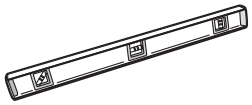
wasserwaage

1/8” (3 mm) bohrer (normal und mauerwerk)

kreuzschlitz-schraubenzieher

7/32” (6 mm) bohrer (normal und mauerwerk)

½” (13 mm) bohrer (normal und mauerwerk)

Bereitgestelltes Material

sechs ¼” x 3” -(63,5 x 76,1)-kreuzschlitzholzschrauben mit kegelkopf

vier 8-32 x 5/16” -(M4, 17-0,794 x 7,94 mm)-flanschkopfschrauben mit kreuzschlitz

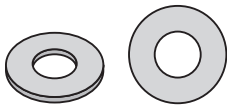
vier ¼”-(63,5 mm) unterlegscheiben

Horizontale Babywickeltisch für Aufbaumontage

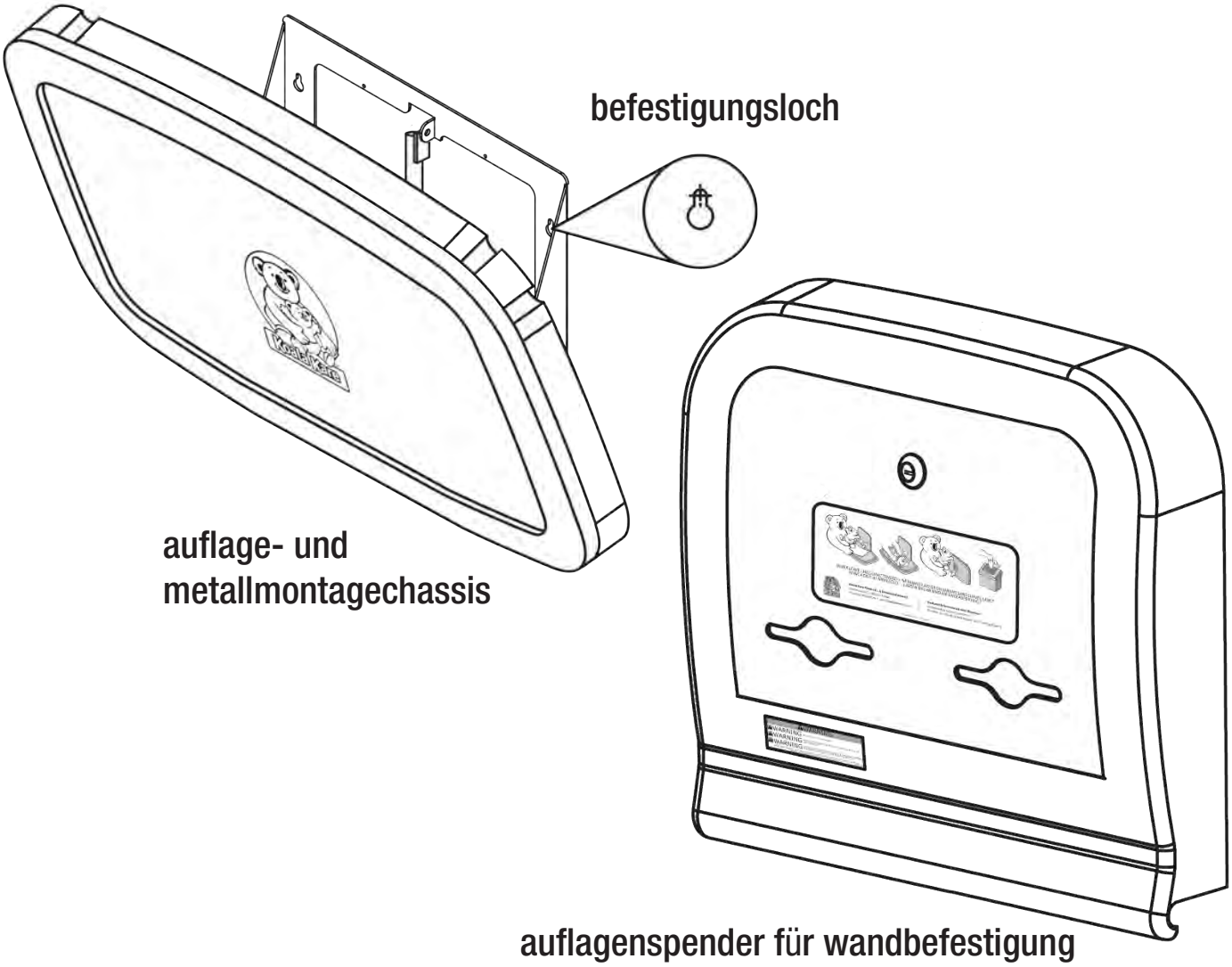

Schritt 1. Prüfen des Inhalts

Nehmen Sie die Wickeltisch aus dem Versandkarton und prüfen Sie das Produkt auf Transportschäden. Sollten Sie Schäden feststellen, wenden Sie sich unter +1-888-733-3456 an den Koala Kare Products Kundendienst. Nehmen Sie das „Monteur-“ und das „Bedienpersonalpaket“ aus dem Karton. Bitte geben Sie das „Bedienpersonalpaket“ an den Gebäudemanager oder das Bedienpersonal weiter. Der Karton sollte zwei Teile beinhalten – die Auflage mit Metallchassis und den Auflagenspender für Wandbefestigung. Ermitteln Sie den geeigneten Ort für die Montage des Produkts.

Schritt 2. Vorbereitung der Montageoberfläche

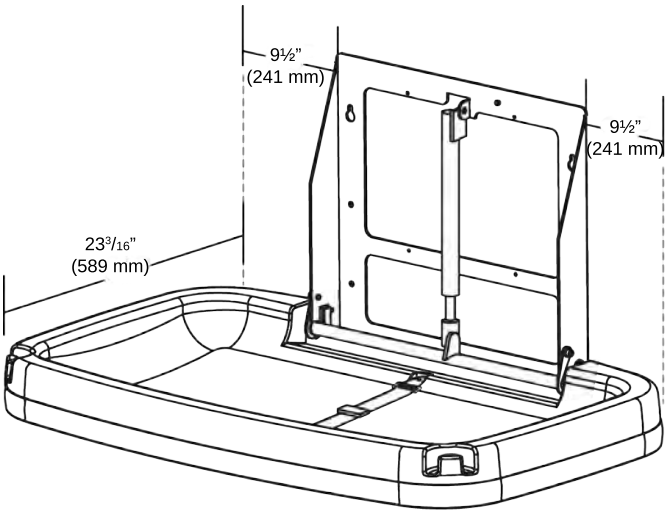

Standardmontage

Nehmen Sie die Auflage und das Chassis aus dem Karton und bestimmen Sie den Wandbereich, an dem das Produkt montiert werden soll. Stellen Sie sicher, dass der für den Gebrauch erforderliche Platz von 9½ Zoll (24,1 cm) auf beiden Seiten des Chassis und 23 3/16 Zoll (58,9 cm) geöffnet ab Wand vorhanden ist. Messen Sie vom Boden ausgehend 42¼ Zoll (107 cm) mittig auf dem Ständer und markieren Sie die entsprechende Stelle an der Wand. Die Bohrlöcher sind auf 16-Zoll-(40,6 cm)-Ständermitten ausgelegt. Stellen Sie vor dem Bohren sicher, dass die für die Bohrlöcher markierten Stellen horizontriert sind. Bohren Sie die Löcher für die Montage vor. Bohren Sie mit einem normalen 1/8” -(3 mm)-Bohrer.

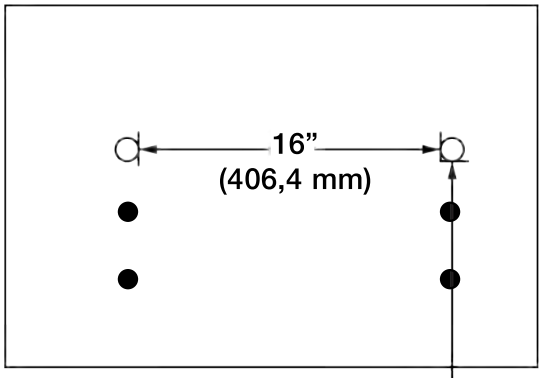

Achtung:
Schritt 3 müssen alle SECHS mitgelieferten Schrauben am Chassis befestigt werden, um die korrekte Tragfähigkeit zu gewährleisten!

Die oberen zwei Schrauben an 42¼ Zoll (1,07 m) (Zur Erfüllung der ADA-Höhenanforderungen) ADA

Boden

Für Mauerwerk oder Fliesen an Ständerleichtbauwand

Bohren Sie mit einem 7/32”-(5 mm)-Mauerwerkbohrer bis zum Ständer vor. Wechseln Sie zu einem normalen 1/8”-(3 mm)-Bohrer.

Für Metallständer oder Betonblöcke

Besitzt die Wand Holzständer, deren Abstand zueinander nicht 16 Zoll (40,6 cm) beträgt, oder Metallständer oder ist sie aus Beton, bohren Sie mit einem 1/2”-(12 mm)-Mauerbohrer. (Vor der Montage müssen Sie sich ggf. Knebel besorgen.) Planen Sie je nach Art der Knebel einen Mindestplatz hinter der Mauer ein, damit sich diese drehen können. Setzen Sie die Knebel ein und ziehen Sie sie fest.

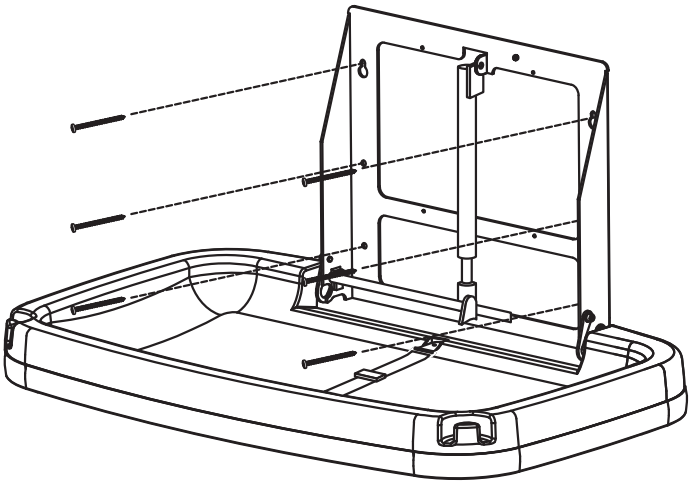

Schritt 3. Montageauflage und Chassis
Schrauben Sie zwei der Montageschrauben in die vorgebohrten Löcher, wobei die Schrauben ca. ¼ Zoll (6,35 mm) herausragen sollten, sodass die Befestigungslöcher leicht über die Schraubenköpfe geschoben werden können. Bringen Sie das Chassis über den Schrauben an, wie in der Abbildung dargestellt. Sobald Sie das Produkt mithilfe der Befestigungslöcher angebracht haben, stellen Sie sicher, dass es horizontriert ist. Ziehen Sie die oberen zwei Schrauben an, sodass diese bündig an der Wand anliegen. Markieren und bohren Sie in den unteren Öffnungen vier weitere Löcher vor. Befestigen Sie die restlichen vier Schrauben und vier Unterlegscheiben und vervollständigen Sie die Montage von Auflage und Befestigungsteil. Alle SECHS Schrauben und vier Unterlegscheiben müssen am Chassis befestigt sein.

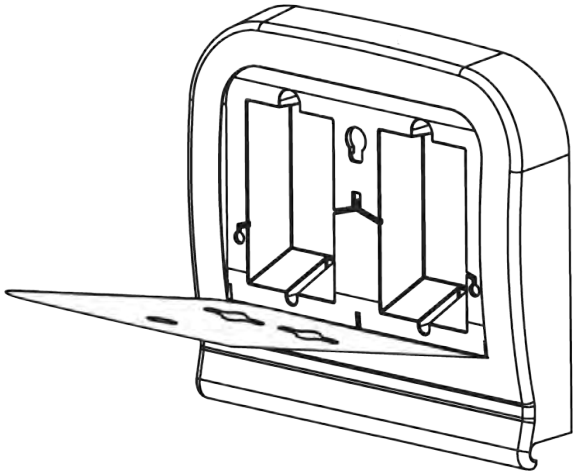

Schritt 4. Montage des Auflagenspenders
Stellen Sie sicher, dass der Spender keinen Schaden aufweist. Entsperren Sie ihn mithilfe des Schlüssels und öffnen Sie den Deckel des Spenders. Dadurch werden die Montagelöcher zugänglich. Gleichen Sie die Montagelöcher des Spenders mit denen des Chassis ab und befestigen Sie ihn mithilfe der vier mitgelieferten Schrauben. Machen Sie die Tür zu und verschließen Sie sie.

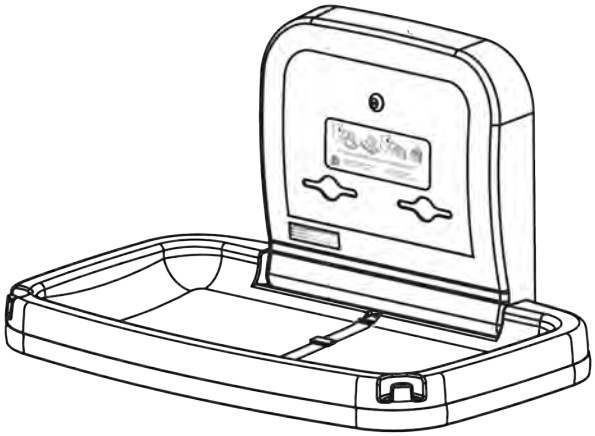

Schritt 5. Montageabschluss
Reinigen Sie Ihren Arbeitsbereich und prüfen Sie das Produkt, um sicherzustellen, dass es sich leicht öffnen und schließen lässt. Geben Sie das Bedienpersonalpaket und den Schlüssel an den Gebäudemanager weiter. Ersatzteile sowie zusätzliche Auflagen sind von Ihrem örtlichen Vertriebshändler oder von Koala unter 888-733-3456 bzw. +1-303-539-8300 erhältlich.

Koala Kare Products A Division of Bobrick
6982 South Quentin St., Centennial, CO 80112-3945

Main 303.539.8300 **Toll Free** 888.733.3456
Fax 303.539.8399 **Koalabear.com**

KROY Sign Systems

A SilverLeaf Design LLC Company

ADA Signs-Injection Molded

Kroy Sign Systems manufactures architectural and ADA (Americans with Disabilities Act) signs for safety and identification applications.

Injection Molded ADA signs feature UV resistant, high impact polystyrene panels that are 8.0" inches square and 1/8" inch thick. Raised white pictograms, text and Grade II Braille insure that ADA and ISA (International Symbol of Accessibility) requirements are achieved. A variety of sign messages are available including restroom signs in English & Spanish translations.

Kroy Injection molded ADA Signs are stocked in four (4) popular colors, Blue, Black, Brown and Dark Gray. Kroy signs comply with federal regulations for the visually impaired. Sign panels are ready to install and suitable for facility interior and exterior applications.

Clear Injection Molded ADA Signs allow Kroy to quickly achieve unlimited colors and specific color combinations that customers require. Signs are back-painted and finished with polyurethane paint to match any PMS (Pantone Matching System) or paint manufacturer color.

Kroy Injection Molded ADA signs are highly visible, durable and affordable. Distributors and customers are assured of experienced manufacturing, quality sign products, timely delivery, written warranties and customer support.

Optional injection molded frames are also available in Black, Brown, Beige, White, Gray and Dark Gray to enhance the sign appearance and provide additional sign panel mounting options.

For more information on this or other Kroy Sign products, call 1-800-950-5769, send us an email or visit us on the web.

signs@kroysignsystems.com • www.kroysignsystems.com

Quality

Service

Innovation

Esthetics

KROY Sign Systems

ADA Signs-Injection Molded

Specification Data

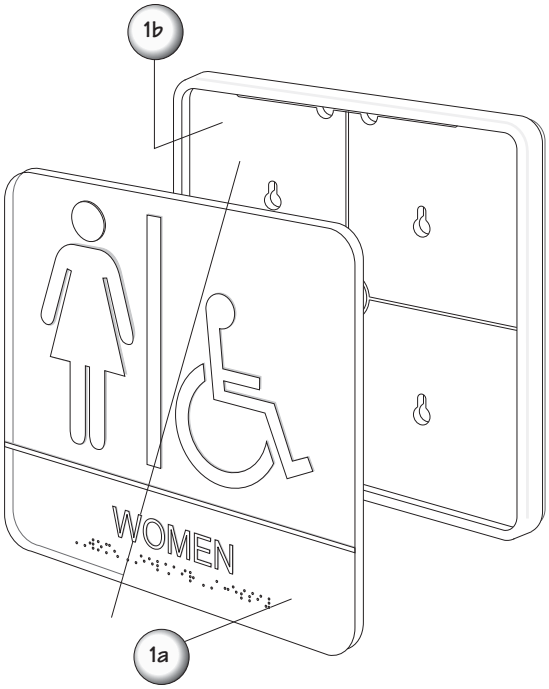

1 Materials

(**1a**) .125" thick injection molded High Impact Polystyrene (HIPS) solid color panel - or - .125" thick injection molded Acrylonitrile Butadiene Styrene (ABS) clear panel.

(**1b**) Optional injection molded frame.

2 Graphics

1/32" raised pictogram, text and Grade II Braille. Surface hotstamped white (solid color panel) or screen printed (clear panel) to match customer specified color.

3 Colors

Solid color panel - Black, Brown, ADA Blue, Dark Grey.

Clear panel - Subsurface painted to match customer specified color.

Frame - Black, Grey, Beige, Brown, ADA Blue, Dark Grey, White or surface painted to match customer specified color.

ALSO AVAILABLE:
High Impact Polystyrene, California Title 24 Restroom signs.

RESTROOM / MEN RESTROOM / WOMEN RESTROOM

4 Message

1 - Restroom/Women
2 - Restroom/Men
3 - Restroom/Women ISA*
4 - Restroom/Men ISA*
5 - ISA*
6 - Restroom
7 - Restroom/ISA*
8 - No Smoking
9 - Restroom/Girls ISA*
10 - Restroom/Boys ISA*
11 - Stairs
12 - In Case of Fire . . .
13 - Men/Hombres
14 - Women/Mujeres
15 - Restroom/Bano
16 - Unisex
17 Unisex/ISA*
18 - Exit (2.5" x 6.5")
19 - Enter (2.5" x 6.5")

* International Symbol of Accessibility

Summary: 2010 ADA Standards for Accessible Design

Letters and numerals shall be raised 1/32" upper case sans serif type and shall be accompanied with Grade II Braille. Raised characters shall be at least 5/8" high, but no higher than 2". Pictograms shall be accompanied by the equivalent verbal descriptions placed directly below the pictograms. The border dimensions for the pictogram shall only be 6" in height. The characters and background of sign shall be eggshell, matte or other non-glare finish. Characters and symbols shall contrast with their background - either light characters on a dark background or dark characters on a light background.

Kroy is a registered trademark of Kroy LLC, used by SilverLeaf Design LLC under license. SilverLeaf Design is not affiliated with Kroy LLC. Copyright 2011 - SilverLeaf Design LLC

4. WARRANTY

This section is structured as follows:

4.01 Warranty

4.02 General Limitations

4.03 Product & Supply Exclusions

4.04 Services Exclusions

4.01 WARRANTY

Materials Manufactured or Installed by Romtec (Seller)

Seller warrants that it will, at its option and in its sole discretion, furnish, F.O.B. Roseburg, Oregon, a replacement for, repair or refund the purchase price to the owner of any goods of its manufacture or part or portion thereof proved to its satisfaction to be defective in workmanship or material under normal use and service within 1 year and 6 months from the date of delivery to the customer or property owner, provided that notice of such defect is given to Seller within such limited period. Should the customer request and Romtec agree to store the goods for an agreed upon time, the delivery date will be based on the date Romtec could have delivered. If Romtec is installing the materials, a warranty of 1 year from the date of final acceptance of the work shall apply to the installation work. Acceptance is defined as the date of the delivery of the building and all its associated components or the date that the building and all its associated components are ready to deliver whichever comes first.

There is no implied warranty of merchantability or implied warranty of fitness for a particular purpose or any other warranty, express or implied, labor, transportation or other costs or expenses relating to such replacement or such repair, including any indirect, incidental, delay or consequential damages.

Components Resold or Supplied with Romtec Materials

Certain components are warrantable directly by the original manufacturer for periods between 90 days and 1 year. The term of such warranties are identified in accompanying documentation. Replacement for, repair or refund of defective workmanship or material under normal use shall be remunerated directly with the manufacturer of the component. Examples of components would be locksets, plumbing fixtures, electrical fixtures, etc.

This warranty extends only to Romtec's direct customer (as named in the Romtec Purchase Order) herein called "customer" and not to any person or entity with whom customer has business relationships, or any party other than customer.

Claims: The following provisions apply to all claims.

a. **Freight Damage Claims:** If Romtec is not installing and agrees to ship goods under any agreement whereby Romtec remains responsible for risk of loss or damage while the goods are in transit, any claims of customer for damage in transit shall be deemed waived and released by the customer, unless made in writing endorsed on the bill of lading at the time customer accepts delivery of the merchandise. CUSTOMER SHOULD CAREFULLY INSPECT THE MERCHANDISE BEFORE ACCEPTING DELIVERY.

b. **Claims of Defective Manufacture:** Claims that the merchandise was incorrectly manufactured or that is defective in any way must be made directly to Romtec on a product-by-product basis. All claims must be made within 72 hours of the defective condition, or the time when the defect should have been discovered, whichever is earlier. All claims must include the following:

1. Detailed description of the specific problem, failure, or other event giving rise to the claim including specific location and supporting photographs or videos.

2. Contact information for individuals who can substantiate the claim but who do not work for customer.

c. **Claims for Missing Materials:** If Romtec is not installing, the customer must inventory the shipment of materials upon arrival at the job site for completeness. Claims for missing or deficient materials shall be reported to Romtec within 5 business days of delivery. If Romtec does not receive notice of missing or deficient materials within the 5 business days Romtec will assume that all the materials were present and in good order. After the 5 day period the customer assumes responsibility for any missing or deficient materials.

d. **Claims for Damaged Materials Stored Prior to Installation:** Building Materials are packaged for shipment only and should be installed within 30 days of delivery. If Romtec is not installing or delayed by customer from installing, and the materials are stored outdoors for more than 30 days, all warranties expressed or implied are null and void. Customer assumes all responsibility in adequately protecting stored materials prior to installation and hereby releases Romtec from any claims arising from inadequately protected materials.

e. **Action in Event of Established Claim:** Liability of Romtec shall be limited to, at its option, repair or replacement of the goods.

f. **No Third Party Claims:** Under no circumstance shall Romtec be responsible for any damage claims by any party other than claims by Romtec direct customers.

Release and Hold Harmless: Customer releases and agrees to defend, indemnify, and hold Romtec harmless from and against any and all claims, demands, actions, and causes of action for any matters arising out of or connected with the Materials whereby the customer is responsible for errors or omissions.

4.02 GENERAL LIMITATIONS

1. **Romtec is the building designer and kit supplier.**

a. Within this document are references to "Romtec" and "Installer." Romtec is the building designer and building kit supplier. "Installer" or "Contractor" is the party erecting the building, NOT Romtec.

a. Romtec will communicate with project subcontractors, engineers, owners and any other parties only through a designated representative of the customer. Romtec will not direct any sub-contractors without the knowledge of Romtec's direct customer.

2. **Romtec is not responsible for the review or understanding of this document by the customer, the customer's representative, architects, engineers and others associated with the project.**

a. Romtec will make every effort to ensure that all parties have access to complete information about the building; however, Romtec is not responsible for the distribution of this document and/or misunderstandings, errors and costs that arise from an incomplete understanding by any party, of the information contained in this document, including past revisions of this document.

b. All parties interested in the project are urged to contact Romtec at any time, with any questions about the building described herein, or about Romtec's responsibilities related to the project.

c. Customer shall review the building drawing(s) and details to ensure all building components are identified and located to customer's satisfaction. Customer is responsible for clearly marking any discrepancies and returning those markups to Romtec.

d. It is the responsibility of the person(s) using the SSDS to ensure that they have the latest revision. Contact Romtec if there is any question about the most current version.

e. Installation should not take place based on any plan sheet that states "Not for Installation" in large letters along the sheet border. It is the installing contractor's responsibility to ensure that the most current plans are distributed amongst their crews and subcontractors when installing the building.

3. **Complete review of this document will require information contained in other documents not supplied by Romtec.**

a. Romtec does not supply various documents related to the project such as the site, grading, or utilities plans. These documents are generally supplied by the owner for the overall project. Thorough understanding of the environment in which the building will be installed and operated requires complete knowledge of information included in these related documents.

b. Such documents may have been supplied to Romtec by the customer and by other parties on behalf of the customer. Romtec has taken the information in these documents as fact. However, Romtec does not know the accuracy, nor take any responsibility for any information included in any of these other documents.

c. The discovery of any error or omission in documents supplied to Romtec by any party on behalf of the customer may require, solely at Romtec's discretion, issuance of a change order to cover associated changes in the building design and materials, delays in delivery and installation of the building and/or additional charges to the customer by Romtec.

d. Romtec shall not be liable for any deficiency in the building design, materials (products and components), delivery, installation and/or any other part of the project that results from any error or omission in documents supplied to Romtec by the customer and by other parties on behalf of the customer at any time.

4. **Compliance with building codes**

a. This Scope of Supply and Design Submittal may contain references to various building codes applicable at the time this document was produced. Romtec's responsibility to meet the requirements contained in these codes extends only to the revisions of these codes listed in this document. Any change to the building design and/or materials, components or products resulting from a revision of a building code occurring after this document is approved will result in a change order.

b. Local building departments reserve the right to modify national building codes to meet the needs of their area. There is no way for Romtec to always know what the requirements of

the reviewing authority will be. Romtec has made every effort to meet local codes. It is the customer's responsibility to notify Romtec of any building codes/regulations unique to the project area that are not included in state or national codes. Failure to do so may result in a change order for changes to the plans and/or building materials.

c. If health department permits are required for any food related services within the building, Romtec encourages the customer to submit preliminary plans for review before the plans are sealed and the building is produced. Any changes to the design after submittal approval and notice to proceed on production, resulting from a health department review, will result in a change order.

d. The building is designed to ADA guidelines. Romtec does not evaluate ADA compliance outside the building perimeter. The customer is responsible for complying with ADA guidelines to and from the Romtec structure.

5. **Site Conditions**

a. Except for those site conditions expressly stated in this Scope of Supply and Design Submittal, Romtec has no knowledge of existing conditions at the project site. If at any time it is determined by Romtec that any condition at the project site that was not previously disclosed to Romtec may affect the design of the building, the materials supplied and/or the building installation, Romtec may issue change orders to accommodate all necessary changes to the building. Such changes may delay project completion.

b. Unless otherwise shown in the Romtec plans, the building site shall be level and finish grade around the building shall slope away from the building for drainage. Romtec has assumed this in the building design. Measures to control surface water and groundwater at or near the site may be required. Romtec does not supply or install rain gutters, downspouts or rain-water drain lines with the building. If these are to be supplied and installed by others, the discharge of water from drain lines must be far enough away from the building so as to not affect the soil around or under the building.

c. If a site specific geotechnical report has not been furnished, Romtec will design the building based on local code requirements and conservative design assumptions. Romtec is not responsible for any issues that arise due to local ground or soil conditions. A geotechnical report from a qualified engineer may be necessary. If a report is available, Romtec requires that the report be provided to Romtec before the final approval and sealing of the building plans for review.

4.03 PRODUCT & SUPPLY EXCLUSIONS

1. **Romtec does not supply the following unless clearly stated otherwise:**

a. Materials for site grading, asphalt paving or masonry pavers

b. Concrete, slab sealer, mortar, grout and rebar

c. Utility equipment or connections to utility services.

d. Drain valves and backflow check valves

e. Plumbing rough in, installation and trim

f. Plumbing freeze protection

g. Wall hangers for toilets

h. Electrical rough in, installation and trim

i. Branch circuit breakers

j. Switches, outlets or light bulbs/tubes

k. Typical fasteners such as roofing nails, staples, or fasteners not included in product packaging

l. Painting of fasteners to match surrounding finishes

m. Latex epoxy paint, clear coat sealer, stain or caulk

n. Gutters and downspouts

o. Fire alarm and fire suppression equipment

p. Lighting equipment not attached to the building

q. Specialty tools including rivets guns and/or bending tools for metal roofing

r. Landscaping or Irrigation Equipment

2. **Warranty of individual components**

a. Romtec assembles the building kit both from components manufactured by Romtec and components manufactured by others.

b. If any Romtec manufactured part is found to be defective and/or has been manufactured in error relative to the SSDS, Romtec will repair and/or replace that part only at Romtec's expense. Parts not manufactured by Romtec will be repaired and/or replaced per the original equipment manufacturer's warranty.

c. Romtec does not offer, nor will Romtec accept any charges and/or claims by anyone relative to delays stemming from the repair and/or replacement of a warranty item.

3. **Metal Roofing**

a. Romtec passes all metal roofing manufacturers' warranties on to the customer. Romtec does not under any circumstances provide a warranty for metal roofing. Please note that metal roofing manufacturers intend for their roofing to be installed immediately upon delivery from the factory. If metal roofing is to be stored for any length of time, manufacturers require certain storage conditions to be met in order to honor any warranty claims (see below). All project circumstances are different and Romtec cannot guarantee that metal roofing is installed within the timeframe allowed from the manufacturer. Romtec also does not assume any responsibility for improper storage of metal roofing at a jobsite by the installer.

b. Metal roofing manufacturers require the following storage conditions to honor a warranty:

- Product cannot be wrapped in an airtight manner, i.e. shrink wrapped.
- Product needs to have air movement available so no water is trapped between panels.
- Product/crate needs to be unpackaged and stored with one end elevated to allow for runoff of any moisture or condensation that may develop.
- The duration of jobsite storage will not exceed one year.

c. Metal roofing in a "corrosive environment" may lead to premature paint failure and rust problems. Metal roofing companies define a corrosive environment as either within a ¼ mile of a body of salt water such as the ocean, or within proximity of an industrial process site such as a paper mill where corrosive substances are present in the air and rain. Romtec is not responsible for warranty issues related to a "corrosive" environment.

d. Some metal roofing manufacturers require their roofing to be installed by certified installers in order to warrant the roofing. AEP Span is an example of a manufacturer with this requirement. Romtec is not responsible for confirming that the installer is certified by any product manufacturer.

4. **Stone Veneer**

a. Stone veneer will crack over time due to multiple factors including building settlement, water infiltration and freezing, wall movement, and other factors. Romtec cannot guarantee that the stone veneer on the building will not eventually crack.

b. Romtec considers the repairing of cracks as a maintenance issue, and not a warranty issue. In other words, the stone veneer on the building will eventually crack and it will not be covered under the building warranty.

c. The installer may be required to cut stone veneer to achieve the required shapes necessary for installation. Romtec is not responsible for any additional work required of the installer.

5. **Block**

a. Romtec provides an additional 8% overage on each block shape and an additional 10% for corner blocks. This is beyond the block quantities stated on the block sheets of the plans. Any additional block required by the installer can be ordered through Romtec with a change order.

b. The installer may be required to cut and/or grind block to achieve the required shapes necessary for installation. This may include notching block for bond beams or cutting full blocks in half. Not all block suppliers provide the same standard shapes. Romtec is not responsible for any additional work required of the installer.

c. Smooth face block can have a significant variation in the color and texture due to the manufacturing process. Smooth face block should never be used as an architectural finish. It should always be either painted over or have siding covering it. Romtec does not guarantee uniform color or texture of block, or warranty that any aspect of block color or texture will maintain over time. Changes in block appearance due to washes applied to the block by the contractor after installation are not the responsibility of Romtec.

6. **Trusses**

a. The final engineered truss drawings from the truss manufacturer may differ slightly from the details shown in the approved plans. The final engineered truss drawings from the manufacturer will typically override the building plans where discrepancies occur. Please contact Romtec to confirm which details control if there are differences between the two sets of plans.

b. Trusses provided by Romtec may or may not be delivered to the site with a boom truck for placement on the finished walls. Not all truss manufacturers include crane time in their supply. Romtec is not responsible for providing a crane for lifting the trusses at the building site. If limited crane time is included with the truss manufacturer's supply and the installer goes beyond the allotted time, it is the installer's responsibility to pay for this overage.

7. **FRP Materials**

a. If FRP panels are included in the design of this building, Romtec has also supplied the glue and pins for installation. Romtec has supplied a gallon of adhesive per panel which is significantly more than the manufacturer recommended two-thirds of a gallon per panel. Romtec has also supplied extra pins beyond the recommended amount per panel (see plans for installation instructions).

b. If the installer uses more adhesive and/or pins than recommended, then it is the installer's responsibility to supply the additional materials.

8. **Restroom Partitions**

a. The final partition layout drawings from the partition manufacturer may differ slightly from the details shown in the approved plans. The final partition drawings from the manufacturer will typically override the building plans where discrepancies occur. Please contact Romtec to confirm which details control if there are differences between the two sets of plans.

9. **Concrete Efflorescence, Lyme Run-out and other staining**

a. Any staining or powdery discharge from the concrete, CMU, grout or mortar after installation of the building is a maintenance issue, not a warranty issue covered by Romtec.

b. Concrete efflorescence (leaching of salt from the concrete) as well as lyme run-out and other staining are naturally occurring in concrete due to the absorption and evaporation of water, which brings salts to the surface and causes staining. This can occur in any concrete material, including faux stone veneer.

c. The occurrence of the above mentioned concrete maintenance issues can be reduced by the use of concrete sealers that help stop the penetration of water. Romtec suggests the use of sealers on all concrete including the walls and floor but does not require it except where stated on the building plans.

10. **Finishes**

a. The finish of all products will eventually fail.

b. Paint, powder coating, galvanizing, primer, stainless steel and all other forms of finish coatings and materials are subject to failure due to many environmental factors including climate and use.

c. The finish of any product is not guaranteed beyond Romtec's warranty period.

11. **Powder Coating**

a. While powder coating offers a more robust initial finish than paint, any flaws, scratches or damage that needs to be repaired over time will eventually have to be painted. Unless the building component can be removed, taken to a powder coater for a fresh coating, and then re-installed, field painting is the only way to re-finish a powder coated surface.

b. Powder coating is not ideal for salt air environments as the steel will eventually rust over time, and then the components will need to be either re-powder coated or painted.

12. **Installation of HVAC Equipment**

a. HVAC equipment (heat pumps, air conditioners, heaters, etc.) are intended to be installed by factory trained technician(s). Any installation of HVAC equipment supplied by Romtec that is not performed by a factory trained technician automatically nullifies the warranty on that equipment. In other words, if Romtec supplies a heat pump system that fails to operate after installation, then the contractor will need to prove that it was installed by a factory trained technician in order for the warranty to cover the fix.

13. **Installation Material Gaps**

a. During the installation process it is common for small gaps to appear in any number of places. Romtec does not provide caulk or any other material to fill these small gaps unless it is specified in the submittal.

14. **Concrete Cracks**

a. All concrete cracks on the surface eventually. This can occur within the first week after the concrete is poured or years after. Surface cracks in concrete are a maintenance issue for the owner to fill over time. Cracks in concrete are not a warranty issue.

b. Most cracks in concrete are surface cracks which have no structural ramifications. With timely sealing of the cracks there should never be any structural issues with the building.

c. Cracks can become an issue if water is allowed to penetrate and then freeze causing spalling and eventual structural damage. Damage to this extent is due to a lack of maintenance and is not Romtec's responsibility to fix. Romtec will however review the situation and provide its opinion on the proper steps to fix the issue.

15. **Water Pressure**

a. Romtec's plans require 40-60 psi water pressure to buildings with plumbing. Water pressure exceeding 60 psi has the potential to damage fixtures. Claims of damaged plumbing fixtures are not covered by the Romtec warranty if the water pressure in the building exceeds 60 psi.

16. **Buy America Materials**

Unless notified by the customer, Romtec sources materials made around the world. "Buy America" requirements must be communicated to Romtec prior to signing a purchase order or a change order will be issued.

4.04 SERVICES EXCLUSIONS

1. **Installation of the Romtec building kit is by others, not Romtec:**

2. **Determination of the suitability of the building to the site plan, utilities plan(s) and other documents is not Romtec's responsibility.**

   a. This Scope of Supply and Design Submittal is limited to the Romtec building; however this document must be considered in its relationship with the overall site. It must be analyzed along with the site plan, utility plan(s) and other documents. Romtec does not provide this analysis, which is the responsibility of the customer. Romtec makes no claim and provides no guarantee that any of the products to be supplied by Romtec will fit on the site.

   b. Romtec will show utilities on the plans such as water, sewer/septic, electrical, gas/propane, etc. to ten (10) feet outside of the building footprint if requested. It is the customer's responsibility to supply adequate water, sewer/septic, electrical and other necessary utility services to within ten feet of the building.

3. **Engineering Services**

   a. Site engineering including utility sizing/location plans, and geotechnical reports is by others.

   b. After submittal approval, Romtec will provide a sealed plan set for review and approval by the appropriate reviewing authority. Romtec will also provide one revision and one additional sealed plan set after one round of comments by the reviewing authority and/or customer. Any additional revisions and sealed plan sets will result in a change order.

   c. Romtec's plan sets are produced on 11" X 17" format. If another format is requested, there will be an additional fee depending on the format size and quantity requested.

   d. Romtec's content on each page, the order in which the pages appear, and the page numbering is final and will not change. At Romtec's option, locations and dimensions of such items supplied by others may be represented in the plan set. The customer is responsible for determining and maintaining the accuracy of all information pertaining to items represented in the plan set which are not supplied by Romtec.

   e. Charges for additional services may vary depending on the scope and quantity of the services requested. This includes additional wet stamped sets, review letters from the engineer of record, or as-built plans. The sealing by the engineer of as-built plans is not available.

   f. Romtec does not provide LEED/Green submittals as a standard service. Romtec can assist in providing documentation for products that may meet LEED/Green standards, but Romtec does not provide or fill out LEED credit forms. Romtec does not supply materials with the intent of meeting LEED standards, and it is not Romtec's responsibility to determine if any materials meet LEED standards. Any changes due to LEED or Green building requirements will result in a change order and increased lead times.

   g. Romtec does not provide mix design review for concrete used in installation as a standard service. If requested, Romtec will issue a change order for this service.

4. **Romtec does not submit or pay fees for building permits.**

   a. As required by building codes and the reviewing authority, customer shall submit the plan set and product submittals to the reviewing authority for approval (if applicable). Customer shall pay all charges related to the plan set review and building permit(s). Customer shall notify Romtec that building permit(s) and final approved plan set are available. No other documents shall be used for installation of the building.

5. **Special Inspection**

   a. Romtec does not provide inspection services. Romtec under no circumstance, shall be considered the special inspector, nor shall Romtec pay any fees associated with inspection. All such fees, costs, and arrangements associated with special inspection are the responsibility of the owner or installing contractor.

6. **Operation and Maintenance Manuals**

   a. Do not discard operation and maintenance manuals provided by some manufacturers in their packaging. Additional copies requested from Romtec may result in a fee.

7. Truck Delivery

a. Delivery of the building requires access by a semi-truck and trailer to the project site or to an alternate site that has been designated by mutual agreement between Romtec and the customer. The customer shall inform Romtec in a timely manner of any potential problem accessing the delivery site, including size and weight limitations on any roads, bridges and driveways leading to the site.

b. Accommodation of special delivery requirements may result in an increase in the quoted shipping cost. Failure of the customer to notify Romtec of any special delivery requirement that results in delivery delays will result in additional shipping charges.

Note*: Romtec is not responsible for installation delays resulting from delivery delays. Romtec is not responsible for any installation delays and subsequent costs if delivery is delayed by the trucking company. Romtec supplies the customer with estimated delivery dates to be confirmed by the shipping vendor. Re-mobilization costs for unloading trucks are to be disputed with the shipping vendor, not Romtec.*

Special Note*: Romtec is also not responsible for installation delays resulting from delivery delays of drop-shipped materials. In other words, some components are shipped to the job site directly from the manufacturer, and while Romtec has made every effort to double check the delivery date, Romtec cannot guarantee that the manufacturer will deliver the component(s) when they have indicated.*

c. The building kit will be delivered to your truck-accessible site by semi-truck, in shrink wrapped pallets, labeled with the project name and the stage of installation. The building installer is responsible for unloading the building kit and must have a forklift with minimum 8,000 lb. capacity and 6 ft. fork extensions to unload materials shipped from Romtec.

8. Shipping List

a. Romtec will send a checklist of the items being shipped. Located inside Pallet #1, labeled "STAGE 1- PALLET A" will be a checklist of parts for each building kit. An inventory of materials MUST be performed after receiving the building. If there are any missing or deficient materials, notification must be given directly to Romtec's project manager within five (5) business days of delivery. If notification is not given within the five (5) day period, Romtec will assume that the order was complete and in good order. Contractor or agency takes full responsibility for any missing or deficient materials from that point forward.

9. Site Storage

a. The owner or contractor must take great care in adequately protecting materials should they be stored for any period prior to installation. The packaging is meant to protect the building during shipment. The building is not packaged for storage. Moisture, direct sunlight and seasonal temperature fluctuations will result in damage to the materials.

b. The owner or contractor shall store the building in a secure, dry, climate controlled location. If the building is stored outdoors for more than thirty days without adequate protection from the elements, the Romtec Limited Warranty may be voided. If storing the building kit for an extended period, all metal roofing must be unpackaged, separated, and completely dried to prevent moisture damage from prolonged storage (see manufacturer's storage requirements).

10. Installation

a. Romtec designs and produces the building packages for quick and complete installation. However, Romtec makes no representation as to how long it will take to prepare the site, install the building, connect the building's utilities, or to receive final approval of the completed building from regulatory agencies.

b. Romtec is not responsible for ensuring that every conceivable installation detail or site condition is reflected in the plans or that the customer, customer's representative, building installer and trade subcontractors have the necessary knowledge of applicable codes to perform installation and/or installation work required by such codes.

c. All methods and equipment used at the site are the responsibility of the installing contractor, not Romtec. Romtec does not know or specify what site preparation or component installation methods or equipment should or will be used.

d. During installation of the building, if the installer discovers a discrepancy in the plans, missing materials, or a shortage of materials, installer is to notify Romtec immediately and report the problem before proceeding. Romtec will then advise the installer on a course of action.

Note: *If the installer purchases materials to replace missing or shorted items without notifying Romtec or having Romtec's approval, Romtec will not be liable for reimbursement.*

e. In the event of theft or vandalism, please notify Romtec. Romtec is not responsible for losses of materials/equipment due to theft or vandalism. Romtec will assist in replacing lost material.

f. If during installation of the building the inspector declares a discrepancy or code issue, the contractor is to contact Romtec immediately and report the problem before proceeding.

g. Installer is responsible for disposal of any of the building kit's packaging materials and any extra building materials supplied by Romtec that are left over from installation of the building.

h. Under no circumstance is Romtec responsible for the previously contaminated soil or other materials originating on the project site.

i. Romtec is not responsible for the location, disturbance, or damage of any underground lines of any kind. Any costs associated with any action which results from the incidental discovery, disturbance, or damage of any previously unidentified and/or unknown underground lines or utilities of any kind, including any pipeline or other transportation conduit, shall be solely the customer's responsibility to bear.

j. Romtec is a material supplier only. In the event that Romtec supplies material that is incorrect or inconsistent with the plans, Romtec will supply the correct material at no cost to the customer or installer. Romtec will not compensate the customer or installer for costs associated with labor, drive time, delays, or re-mobilization as a result of incorrect material.